FINAL
~~DRAFT~~

INITIAL STUDY AND MITIGATED NEGATIVE DECLARATION

HOLLISTER AVENUE BRIDGE REPLACEMENT PROJECT

Project Case No. 14-074-MND

Prepared by URS Corporation
130 Robin Hill Road, Suite 100
Santa Barbara, CA 93117

August 18, 2015
~~December 18, 2014~~

TABLE OF CONTENTS

Section **Page**

1 PROJECT TITLE 1
2 LEAD AGENCY NAME AND ADDRESS 1
3 APPLICANT/CONTACT PERSON AND PHONE NUMBER 1
4 PROJECT LOCATION AND AREA OF POTENTIAL IMPACT 1
5 PROJECT DESCRIPTION 1

5.1 Introduction 1
5.2 Purpose and Need 1
5.3 Project Design 5
5.4 Architecture and Landscape Design 6
5.5 Construction ..... 7~~6~~
5.6 Right-of-Way 9
5.7 Utilities 10
5.8 Habitat Restoration 10

6 DISCRETIONARY APPROVAL REQUIRED BY OTHER PUBLIC AGENCIES 10
7 SITE INFORMATION 11
8 ENVIRONMENTAL SETTING 11

8.1 Baseline for Environmental Review 11
8.2 Topography and Soils 12
8.3 Fauna, Flora, and Surface Water Bodies 12
8.4 Archaeological/Cultural Resources ..... 13~~12~~
8.5 Surrounding Land Uses ..... 13~~12~~
8.6 Existing Structures ..... 13~~12~~

9. ENVIRONMENTAL FACTORS POTENTIALLY AFFECTED 13
10 DETERMINATION ..... 14~~13~~
11 EVALUATION OF ENVIRONMENTAL IMPACTS ..... 15~~14~~
12 ISSUE AREAS ..... 17~~16~~

12.1 Aesthetics ..... 17~~16~~
12.2 Agriculture and Forest Resources ..... 24~~23~~
12.3 Air Quality ..... 26~~25~~
12.4 Biological Resources ..... 36~~34~~
12.5 Cultural Resources ..... 59~~56~~
12.6 Geology and Soils ..... 64~~61~~
12.7 Greenhouse Gas Emissions ..... 69~~66~~
12.8 Hazards and Hazardous Materials ..... 76~~72~~
12.9 Hydrology and Water Quality ..... 84~~79~~

Section **Page**

12.10 Land Use and Planning ..... 91~~85~~
12.11 Mineral Resources ..... 94~~88~~
12.12 Noise ..... 96~~90~~
12.13 Population and Housing ..... 105~~98~~
12.14 Public Services ..... 107~~100~~
12.15 Recreation ..... 110~~103~~
12.16 Transportation/Traffic ..... 112~~105~~
12.17 Utilities and Service Systems ..... 118~~110~~

13 MANDATORY FINDINGS OF SIGNIFICANCE ..... 123~~115~~
14 PREPARERS OF THE FINAL ~~DRAFT~~ MITIGATED NEGATIVE DECLARATION, CONTACTS, AND REFERENCES ..... 123~~115~~

14.1 Contributors and Contacts ..... 123~~115~~
14.2 References ..... 124~~116~~

15 APPENDICES ..... 128~~120~~

Tables

Table 1 Construction Equipment 7
Table 2 Summary of Jurisdictional Impacts within the Area of Potential Impact for San Jose Creek ..... 42~~39~~
Table 3 Trees within the Area of Potential Impact ..... 43~~40~~
Table 4 Previous Archaeological Studies in the Project APE ..... 60~~54~~
Table 5 Bay Area Air Quality Management District Guidelines for GHG Emissions ... 72
Table 6 General Assessment Noise Thresholds in One-hour Leq (dBA) ..... 98~~90~~
Table 7 Detailed Assessment Noise Thresholds ..... 99~~91~~
Table 8 Noise Sensitive Receivers and Relative Distances ..... 100~~91~~
Table 9 Equipment Noise Levels and Usage ..... 101~~92~~
Table 10 General Assessment Results (One-hour Leq, dBa) ..... 101~~93~~
Table 11 Detailed Assessment Results (Daytime 8-hour Lleq, dBA) ..... 102~~93~~
Table 12 2015 Baseline Traffic Conditions ..... 114~~105~~

1 PROJECT TITLE

Hollister Avenue Bridge Replacement Project; Case No. 14-074-MND.

2 LEAD AGENCY NAME AND ADDRESS

City of Goleta, Public Works Department, 130 Cremona Drive, Suite B, Goleta, California 93117.

3 APPLICANT/CONTACT PERSON AND PHONE NUMBER

Rosemarie Gaglione, Public Works Director, (805) 961-7500

4 PROJECT LOCATION AND AREA OF POTENTIAL IMPACT

The project site is located within the City of Goleta at an existing bridge on Hollister Avenue. The bridge spans San Jose Creek and is adjacent to the Highway 217/Hollister Avenue Interchange. The project location is illustrated on Figures 1 and 2 while the project's Area of Potential Impact (API) is illustrated on Figure 3. The API consists of two distinct areas. The southern portion of the API includes the existing bridge and adjacent areas that would be permanently affected by bridge replacement. The northern portion of the API includes a potential mitigation site for habitat restoration. Site plans are provided in Appendix A.

5 PROJECT DESCRIPTION

5.1 Introduction

The City of Goleta proposes to replace the existing 4-lane Hollister Avenue Bridge with a new 4-lane bridge. The bridge spans San Jose Creek and is adjacent to the Highway 217/Hollister Avenue Interchange. The existing bridge was constructed in 1964 and was widened in 1981. The existing bridge consists of pre-stressed concrete voided slab units supported on concrete abutments and driven piles. The existing single span bridge is 104 feet wide and 45 feet long.

5.2 Purpose and Need

The existing Hollister Avenue Bridge over the San Jose Creek Channel has a Sufficiency Rating of 68.6 and is classified as ~~f~~Functionally ~~o~~Obsolete by Caltrans Office of Structure Maintenance. The bridge was constructed using reactive aggregate and there is significant cracking in the deck and pile cap/beam. The triggering deficiency resulting in the need for bridge replacement is waterway inadequacy. The bridge can only convey 25-year flood flows and is a contributing factor to flooding that occurs in the Goleta Old Town area, while the bridges upstream and the channel downstream can all convey a 100-year storm.

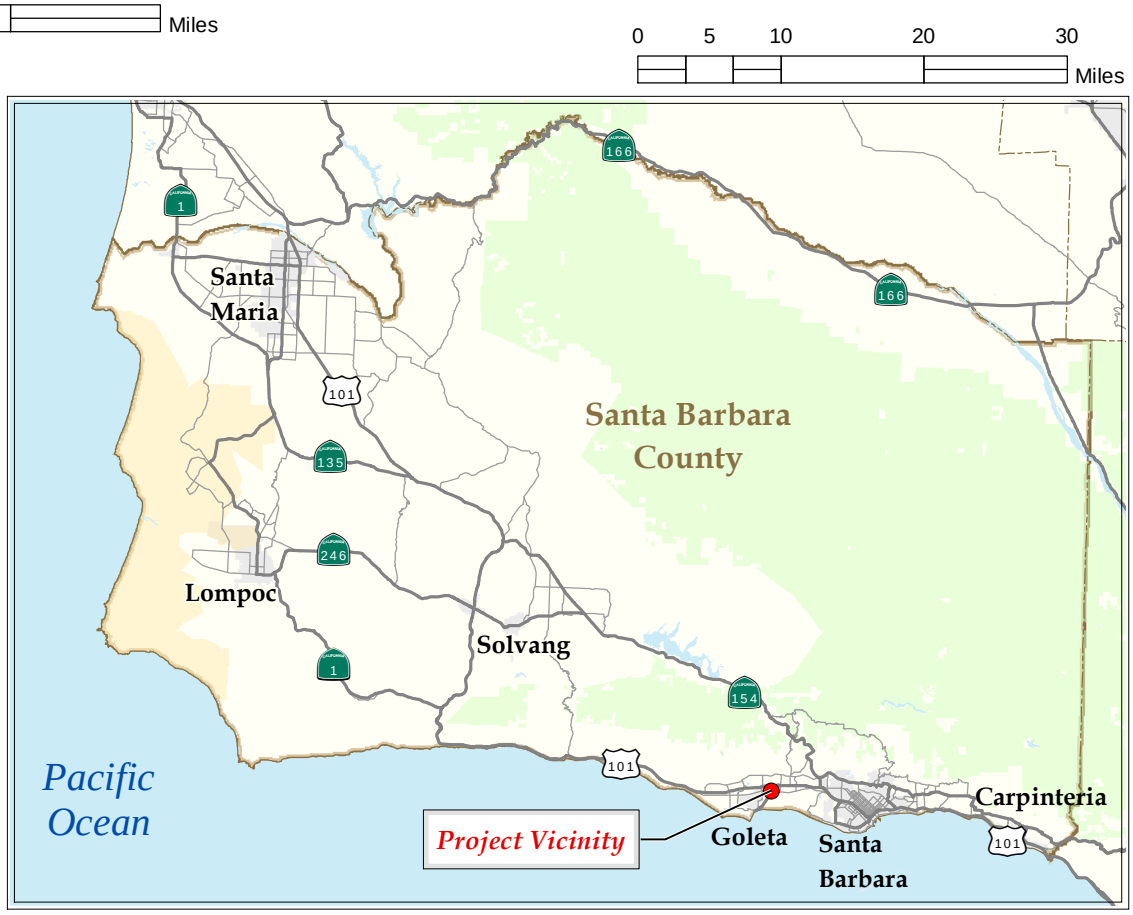

V:\Projects\GIS_Proj\City of Goleta\deliverables\HollisterAve\SMND\Fig1_Project_Vicinity.mxd

Hollister Avenue **Bridge Replacement Project** **City of Goleta, CA** **05-SB-0-GLTA BRLS-5481 (013)** URS Corporation	**Source:** [1] The layer, below 1:3m, presents the 50 states, the District of Columbia, and Puerto Rico of the United States. It provides detailed boundaries that are consistent with the block group, tract, and county data sets and are	**Figure 1.** PROJECT VICINITY	2014

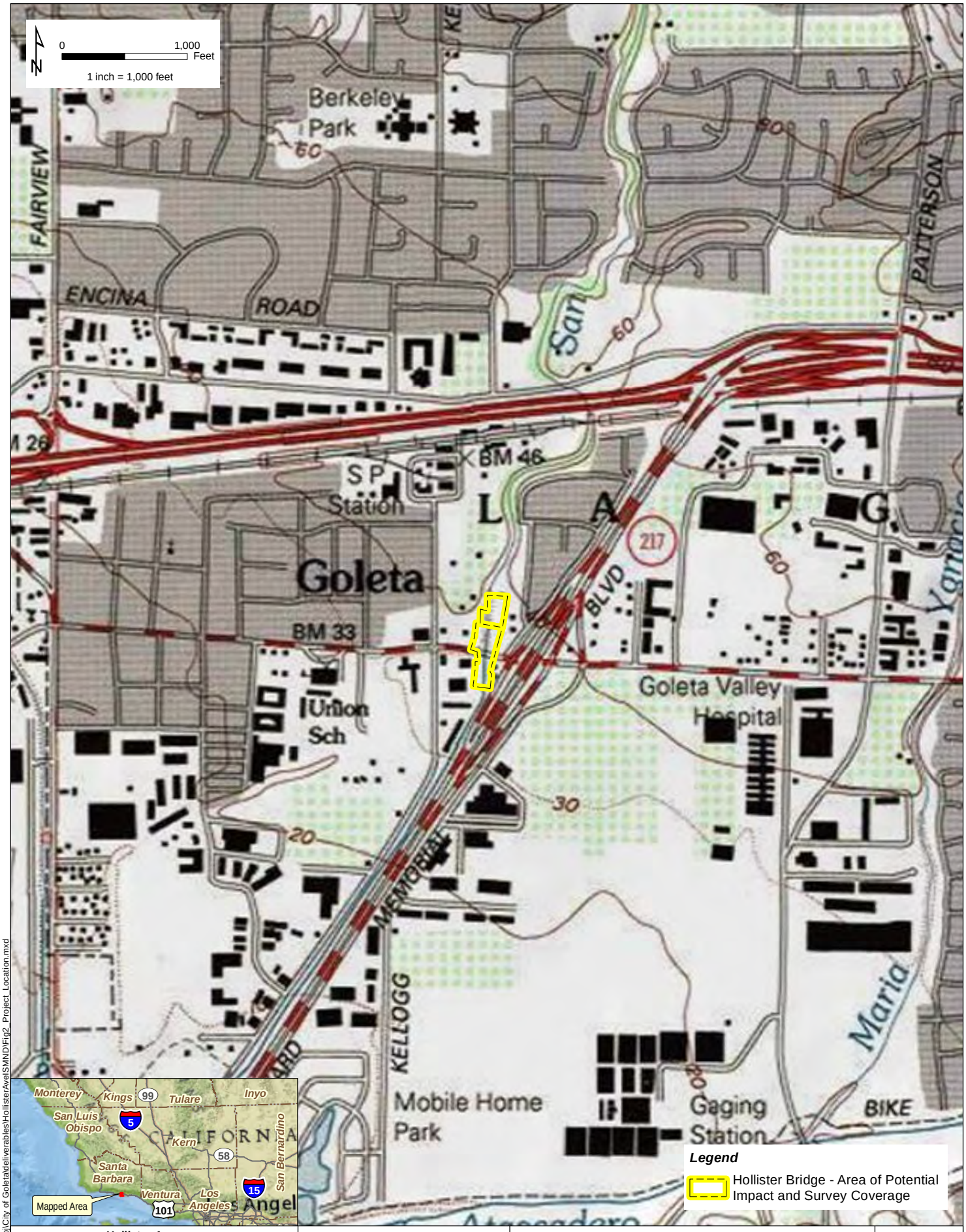

V:\Projects\GIS_Proj\City of Goleta\deliverables\HollisterAve\SMND\Fig2_Project_Location.mxd

Hollister Avenue **Bridge Replacement Project** **City of Goleta, CA** **05-SB-0-GLTA BRLS-5481 (013)**	**Source:** [1] Seamless, scanned images of United States Geological Survey (USGS) paper topographic 1:24,000 scale,Goleta Quad 1988, Copyright: 2013 National Geograpic Society, i-cubed.	**Figure 2.** PROJECT LOCATION AND SURVEY COVERAGE	2014
URS Corporation			

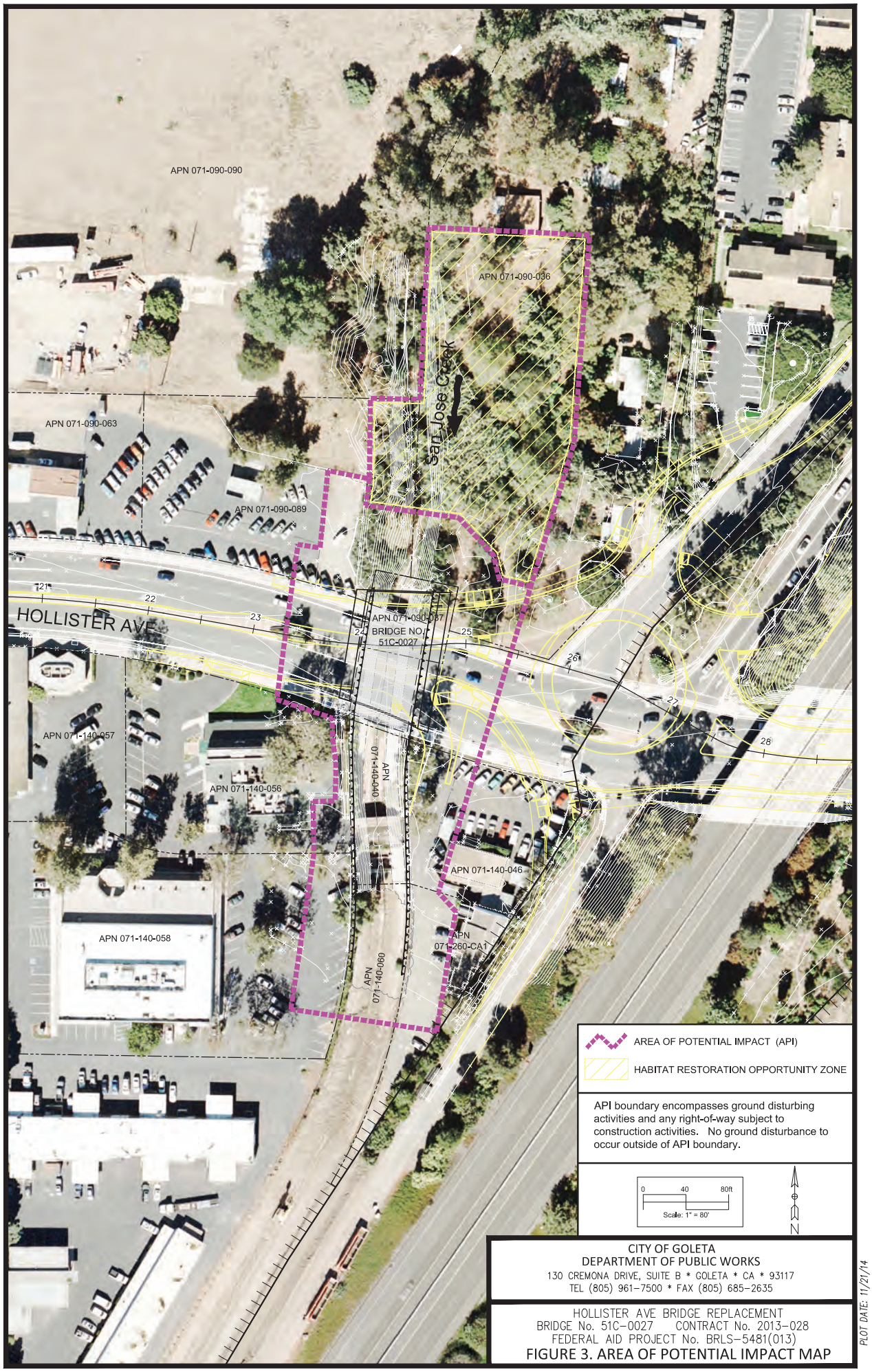

CITY OF GOLETA
DEPARTMENT OF PUBLIC WORKS
130 CREMONA DRIVE, SUITE B * GOLETA * CA * 93117
TEL (805) 961-7500 * FAX (805) 685-2635

HOLLISTER AVE BRIDGE REPLACEMENT
BRIDGE No. 51C-0027 CONTRACT No. 2013-028
FEDERAL AID PROJECT No. BRLS-5481(013)

FIGURE 3. AREA OF POTENTIAL IMPACT MAP

PLOT DATE: 11/21/14

The purpose of the project is to replace the existing Hollister Avenue Bridge with a new bridge that will convey 100-year storm flows and meet current design standards, providing a safe crossing over San Jose Creek for vehicles and pedestrians. (Note: The new bridge would not expand traffic capacity).

5.3 Project Design

The existing bridge will be replaced with a new structure that will clear span the creek and be approximately 68 feet in length (see site plans in Appendix A). The typical roadway section will consist of four 12-foot-wide through traffic lanes, bicycle lanes/shoulders, 10-foot-wide sidewalks and a median. The bridge type will be a cast-in-place post-tensioned concrete slab. The overall width and configuration of the proposed bridge conforms to the layout of the roundabout located at the State Route 217 (SR 217) southbound on- and off-ramps/Hollister Avenue intersection proposed as part of the Ekwill Fowler Road Extensions project. The centerline of the new bridge alignment matches existing at the west end of the bridge, and is oblique and approximately 20 feet upstream at the east end of the bridge compared to the centerline of the existing bridge.

The new foundations and abutments will be constructed behind the existing abutments. The abutments will be supported on cast-in-drilled hole (CIDH) piles. Driven pile foundations will not be used due to the resulting noise and vibration impacts. The new abutment walls will act as the channel walls within the limits of the new bridge.

This project consists of widening 210 feet of the San Jose Creek channel immediately downstream of the new bridge so that the channel conveys 100-year flood flows and conforms to the San Jose Creek Capacity Improvement and Fish Passage Project that was recently completed downstream. The existing remaining concrete lined trapezoidal shaped channel will be replaced with a wider channel with vertical walls. Cantilever walls utilizing steel reinforced drilled shafts will be used for the channel walls. The channel bottom will be protected with articulated concrete mats, ~~with provisions~~ and a low-flow fish passage channel and weirs will be constructed, as previously approved in the environmental and other resource agency permits for the San Jose Creek Capacity Improvement and Fish Passage Project ~~Project (now referred to as the San Jose Creek Capacity Improvement and Fish Passage Project)~~.

The ~~limits~~ specifications of the channel improvements for the San Jose Creek Capacity Improvement and Fish Passage Project ~~were dictated by~~ resulted from the need to terminate the channel improvements short of the privately owned steel bridge so that it can be utilized for access for as long as possible ~~prior to~~ before removal.

This project also consists of constructing an 80-foot-long transition from the improved San Jose Creek Channel under the bridge to the natural creek immediately upstream of the bridge. These channel improvements and transitions ~~have~~ were already ~~been proposed and~~ approved by various oversight and permitting agencies as part of the San Jose Creek Capacity Improvement and Fish Passage Project. The channel transition

work is included in this project since it is contingent on the Hollister Avenue Bridge being replaced, and was not completed as part of the San Jose Creek Capacity Improvement and Fish Passage Project.

A privately owned steel bridge, located approximately 75 feet south of Hollister Avenue, ultimately will be removed as part of this project. ~~but i~~It will, however, remain in place during some stages of construction to provide access to parcels located southeast of the Hollister Avenue Bridge. These parcels currently have access to Hollister Avenue by a right-turn in and out driveway to the east of San Jose Creek. This driveway will be closed during construction, and relocated to the west and partially onto the new bridge to fit with the alignment of the new proposed roundabout located directly east of the bridge. In addition, a portion of the channel wall may need to be designed as a cantilever bridge deck to support the driveway over the creek.

5.4 Architecture and Landscape Design

Architectural elements of the proposed bridge ~~have not been detailed~~ are not yet determined. ~~but t~~The project, however, is located in Goleta's Old Town Heritage District and would include aesthetic treatments that comply with that District's requirements. The Visual and Historic Resources Element of ~~Goleta's 2006~~ the Goleta General Plan ~~specifies that~~ require all design in Old Town ~~shall~~ to maintain and enhance the historic character and be consistent with the Goleta Heritage District Architecture and Design Guidelines (Goleta Heritage District Guidelines). The Goleta Old Town Heritage District Architecture and Design Guidelines were developed to "enhance the image of Old Town, ensure development of a distinctive and unified streetscape, and contribute to a more pedestrian oriented downtown area."

The General Plan also identifies policies associated with landscape design, streetscape and frontage design, lighting, signage, and utilities that relate to visual aspects of the project's design. For example, the General Plan ~~indicates~~ provides that Hollister Avenue at SR 217 ~~should~~ be developed as a prominent "Gateway" to Goleta. The project would incorporate these policies and guidelines to ensure that its design preserves and enhances Goleta's visual character. ~~As per the Goleta Heritage District Guidelines, a~~Architectural elements of public improvements would be inspired by historic design styles in Goleta Old Town. ~~Goleta's~~ The Design Review Board ~~will conduct public meetings to~~ will review ~~the~~ architectural elements of the project during project design. Review would include such architectural elements as street lights, bridge design, and street furnishings (benches, litter receptacles, etc.). Recommendations from the Design Review Board would be incorporated into the project design, ~~as~~ if feasible.

5.5 Construction

Demolition and Construction Staging

Demolition of the existing Hollister Avenue Bridge will be performed in accordance with the California Department of Transportation (Caltrans) Standard Specifications modified to meet environmental permit requirements. Table 1 provides a description of the type of equipment likely to be used during the construction of the ~~proposed~~ project. All concrete and other debris resulting from the demolition of the existing bridge will be removed from the project site and properly disposed of~~ by the contractor~~. The ~~construction~~ City's contractor will be responsible for preparing a bridge demolition plan that conforms to the permit requirements.

Table 1: Construction Equipment

Equipment	Construction Purpose
Air compressor	Bridge removal + finishing work
Backhoe	Soil manipulation + drainage work + bridge removal
Bobcat	Fill distribution
Boom truck	Rebar installation + bridge & channel lining & creek diversion removal
Bulldozer/loader	Earthwork construction + clearing and grubbing + bridge removal
Concrete truck	Concrete placement for CIDH piles, abutment, and superstructure
Crane	Placement of falsework + soldier pile wall beams + rebar cages
Dump truck	Fill material delivery + bridge removal
Excavator	Soil manipulation
Forklift	Bridge and channel lining removal
Front-end loader	Dirt or gravel manipulation
Grader	Ground leveling
Jackhammer	Bridge and channel lining removal
Haul truck	Earthwork construction + clearing and grubbing
Large drilling truck	CIDH pile installation
Roller/compactor	Earthwork construction
Truck with seed sprayer	Landscaping
Water truck	Earthwork construction + dust control

Water diversion methods may include the use of water bladders, sandbags, sheet piling, pipes or coffer dams, or other structural methods approved by the Project Engineer and California Department of Fish and Wildlife (CDFW). In-stream work will consist of removing the existing abutments, removing the existing channel lining and walls, constructing new channel walls, placement of articulated revetment at the bottom of the creek, constructing new abutments, and placing falsework. This work will be conducted during the dry season work window, typically between May ~~15~~ and October ~~15~~. This window pertains to work within the creek ~~and is specified by the CDFW and other resource agencies~~. Work that can be performed without having to be physically in the creek such as traffic control, grading, approach roadway modifications, and bridge barrier construction can be performed outside of this window. All stream diversion materials will be entirely removed ~~entirely~~ from the project site following ~~once~~ construction ~~is complete~~completion. Excavation at abutments and channel walls will require dewatering. Groundwater and seepage in the dewatered area would be removed in accordance with Section 401 of the Clean Water Act (CWA) (33 U.S.C. §§ 1251, *et seq.*). Best management practices (BMP) will be implemented during construction to prevent concrete or other materials from entering the channel.

Construction will include the following activities:

- Stage 1:

  ~~1.~~ Tree removal and clearing and grubbing in the area of the new bridge and approaches

  ~~2.~~ Diversion of San Jose Creek into a pipe through the construction site

  ~~3.~~ Placement of k-rail and reducing and rerouting traffic to a minimum of one lane in each direction on the southern portion of the existing bridge

  ~~4.~~ Temporary relocation of any utilities located on the northern portion of the existing bridge

  ~~5.~~ Removal of northern portion of the existing bridge for its entire length to provide room to construct stage 1 of the new bridge

  ~~6.~~ Saw cutting and removal of the existing channel walls and lining

  ~~7.~~ Drilling holes, installing rebar cages and pouring concrete for CIDH piles

  ~~8.~~ Constructing the new abutments and channel walls which will result in a depth of excavation no greater than 25 feet deep from the top of roadbed

  ~~9.~~ Erecting falsework that will be placed between the channel walls

  ~~10.~~ Placing superstructure concrete for Stage 1 portion of the new bridge

  ~~11.~~ Relocation of utilities onto the stage 1 portion of the new bridge

  ~~12.~~ Removal of falsework from below Stage 1 portion of new bridge

~~13.~~ Constructing channel wall transition from new abutments to the natural creek bed immediately upstream of Hollister Avenue

~~14.~~ Constructing the new roadway approaches including grading, compacting, raising existing utility manholes, and placing aggregate base and asphalt concrete pavement

- Stage 2:

~~15.~~ Routing westbound traffic onto the just completed Stage 1 section of the new bridge so that traffic in each direction can be maintained using the Stage 1 portion of the new bridge and the southern portion of existing bridge for the time period between the in-creek work windows

~~16.~~ ~~Prior to the start of~~ Before starting the second in-creek work window, reroute traffic off of the existing bridge and route both directions of traffic to the Stage 1 portion of the new bridge (minimum of 1 lane in each direction)

~~17.~~ ~~Removal of~~ Removing the remaining portion of the existing bridge

~~18.~~ Installing cast-in-drilled-hole piles (CIDH piles), constructing new abutments, erecting falsework and placing superstructure concrete for the remaining portion of the new bridge (Stage 2)

~~19.~~ ~~Removal of~~ Removing the privately owned steel bridge and ~~construction of~~ constructing channel walls from the new bridge to conform to the improved and wider San Jose Creek channel constructed as part of the San Jose Creek Capacity Improvement and Fish Passage Project

~~20.~~ ~~Construction of~~ Construct a replacement driveway east of San Jose Creek

~~21.~~ ~~Removal of~~ Removing falsework from the channel

~~22.~~ Installing articulated revetment at bottom of creek and removing diversion pipe

~~23.~~ Constructing the remaining portion of the new roadway approaches including grading, compacting, and placing aggregate base and asphalt concrete pavement

Construction Schedule and Timing

~~Construction of~~ Constructing the ~~proposed~~ project is anticipated to take approximately 24 months to complete. It is anticipated that the bridge construction project will start construction in spring 2016 and be completed by spring 2018.

5.6 Right-of-Way

There are up to seven properties that could be permanently affected by the project: APN 071-090-089 (DLC Enterprises, Inc.), APN 071-090-037 (County of Santa

Barbara), APN 071-090-036 (Newland), APN 071-140-046, APN 071-140-056, APN 071-140-058 (Bottiani Properties), and APN 071-260-CA1, the latter of which represents the common area shared by eight condominium units (APNs 071-260-01 through -08). Acquisitions from these properties as well as the potential for utility easements are likely. In addition to permanent impacts, it is worth noting that the common parking area associated with the condominium units will be temporarily closed for staging and equipment use during the construction period. Additionally, ~~It is assumed that~~ the contractor is expected to ~~will~~ use the closed portions of the roadway approaches for staging.

~~Government Code consistency was approved for this right-of-way work as part of the City Planning Commission's review of the Capital Improvement Program, which has included the Hollister Bridge project since 2011–2012.[~~

5.7 Utilities

There are a number of utilities located under the existing bridge structure that will need to be relocated. A 6-inch-diameter gas line, water line, fiber optic, and telecommunication lines are located under the sidewalk on the north side of the existing bridge. Telecommunication and electrical lines are located under the sidewalk on the south side of the existing bridge. At each corner of the bridge, storm drainage lines run underneath the roadway approaches and empty out into San Jose Creek. Properties located southeast of the Hollister Avenue Bridge are currently being serviced by an 8-inch sewer line that runs underneath the privately owned steel bridge that is located about 100 feet south of Hollister Avenue. Since the privately owned steel bridge will be removed as part of this project, the sewer line will need to be relocated to provide service to those properties. Utilities will be relocated, but their precise locations have not yet been designed. Some may be relocated on or within the bridge while others may be relocated via directional boring under San Jose Creek.

5.8 Habitat Restoration

A small ~~amount~~ area of riparian habitat will be permanently removed during construction and habitat restoration is proposed as a mitigation measure (see Section 12.4). As a result, the API has been expanded to the north to include a potential mitigation site referred to ~~herein~~ as the Habitat Restoration Opportunity Zone (see Appendix A, Figure 3). Potential ground disturbance in this this zone would be limited to manual removal of several stands of the invasive giant reed (*Arundo donax*) and use of hand tools to install new native vegetation. This area would not be directly affected by bridge replacement. See Section 12.4 for additional information.

6 DISCRETIONARY APPROVAL REQUIRED BY OTHER PUBLIC AGENCIES

City of Goleta advisory ~~discretionary~~ actions include Design Review Board ~~advisory~~ review. The project's consistency with Government Code ~~Section~~ § 65401 ~~has already~~

~~been completed as part of the~~ occurred on May 11, 2015 through Planning Commission Resolution No. 15-03. ~~Planning Commission's review of the City's Capital Improvement Program since 2011-12.~~ Caltrans must issue ~~' actions include issuance of~~ an encroachment permit. Because the project is in part federally funded and because San Jose Creek is classified as a water of the United States, Caltrans is also preparing the National Environmental Policy Act (NEPA) clearance document for the project.

The project would require a CWA Section 404 permit from the U.S. Army Corps of Engineers; ~~,~~ a CWA Section 401 Water Quality Certification from the Regional Water Quality Control Board; and Fish and Game Code Section 1600 Streambed Alteration Agreement with the California Department of Fish and Wildlife.

7 SITE INFORMATION

Site Information	
General Plan/Coastal Land Use Plan Land Use Designation	Planned, Old Town, Recreation
Zoning Designation	DR10 Design Residential, C2 Retail Commercial
Site Size	1,130 square feet (approximately 0.03 acre) of new impervious bridge deck; 1.82 acres Area of Potential Impact (API)
Present Use and Development	Existing bridge over San Jose Creek and concrete lined creek channel
Surrounding Uses/Zoning	North: Undeveloped land and the San Jose Creek/DR-10, DR-20, C-2 East: Dearborn Place, Hollister Avenue, undeveloped land, residential/commercial land/DR-10, DR-30, C-2 South: San Jose Creek, commercial development and asphalt parking areas/C-2, M-RP West: Hollister Avenue, commercial development and asphalt parking areas/C-2
Access	Existing and proposed access via Hollister Avenue
Utilities and Public Services	Water Supply: Goleta Water District (GWD) Sewage: Goleta Sanitary District Power: Southern California Edison, Southern California Gas Co. Fire: Santa Barbara County Fire Department Comm.: Verizon, Time Warner, Cox, Crown Castle

8 ENVIRONMENTAL SETTING

8.1 Baseline for Environmental Review

The existing Hollister Avenue Bridge over San Jose Creek is a single span bridge measuring 104 feet wide and 45 feet long. It is classified as ~~f~~Functionally ~~o~~Obsolete by the Caltrans Office of Structure Maintenance. The bridge can only convey 25-year flood

flows and is a contributing factor to flooding that occurs in Goleta Old Town area. The project consists of replacement of the existing bridge with a new single span bridge that will be approximately 68 feet long, approximately 106 feet wide on the west end, and approximately 130 feet wide on the east. The new bridge is being designed to improve the capacity of the channel to provide for 100-year floods and meet current design standards. The overall width and configuration of the proposed bridge is controlled by the layout of the roundabout to be located at the SR 217 Southbound on- and off-ramps/Hollister Avenue intersection proposed as part of the Ekwill Fowler Road Extensions project. The centerline of the new bridge alignment is oblique and slightly upstream compared to the centerline of the existing bridge. The difference between the existing bridge and the proposed new bridge that would convey 100-year storm flows and meet current designs standards is the focus of this environmental review.

This document addresses potential direct and indirect environmental effects in the project's API (see Figure 3). Please note that cultural resources terminology describes this same area as the Area of Potential Effect (APE). For present purposes, the API and APE are equivalent.

8.2 Topography and Soils

The project area is located in the Goleta Valley, and topography is generally flat with very minor sloping south/southwest towards the Pacific Ocean. At the proposed project site, San Jose Creek is at an elevation of approximately 35 feet above mean sea level. The creek parallels SR 217 southwest towards Goleta Slough for approximately 1.5 miles.

8.3 Fauna, Flora, and Surface Water Bodies

In the area occupied by the existing bridge, San Jose Creek is confined by sloped concrete sides and a concrete channel bottom in a configuration similar to a box culvert with the bridge deck forming the roof. A concrete apron and wing walls upstream of the existing bridge structure serve as a transition between the concrete structure and the adjacent natural banks. San Jose Creek upstream of the concrete apron is an intermittent stream that has an unvegetated sandy bed with some cobble, and arroyo willow (*Salix lasiolepis*) thickets on its steep banks. Downstream of the existing bridge, construction of the San Jose Creek Capacity Improvement and Fish Passage Project has been completed. Under current conditions, San Jose Creek is confined within concrete bed and very steeply sloped to vertical banks downstream of the existing bridge structure. Generally, the portion of the API downstream of the existing bridge is characterized by the concrete channel and adjacent areas of paved land and heavily disturbed bare ground.

8.4 Archaeological/Cultural Resources

No known archaeological sites exist within the current Area of Potential Effect (APE). One archaeological site is listed within 0.5 mile of the project area: CA-SBA-2204H. CA-SBA-2204H is a historic site associated with the Sexton House, a Santa Barbara County Landmark located approximately 0.3 mile from the project APE at 5494 Hollister Avenue.

8.5 Surrounding Land Uses

The project site is located within an urban corridor and would replace an existing bridge. The site is primarily surrounded by commercial uses such as car dealerships, a small retail center and vacant land.

8.6 Existing Structures

The existing bridge was constructed in 1964 and widened in 1981, and consists of pre-stressed concrete voided slab units supported on concrete abutments and driven piles. The bridge was constructed using reactive aggregate and there is significant cracking in the deck and pile cap/beam. The bridge can only convey 25-year flood flows and is a contributing factor to flooding that occurs in Goleta's Old Town area.

9. ENVIRONMENTAL FACTORS POTENTIALLY AFFECTED

The environmental factors checked below would be potentially affected by this project, involving at least one impact that is a "Potentially Significant Impact" or requires mitigation as indicated by the checklist and analysis on the following pages:

- ■ Aesthetics
- ☐ Agricultural Resources
- ■ Air Quality
- ■ Biological Resources
- ■ Cultural Resources
- ■ Geology/Soils
- ■ Greenhouse Gas Emissions
- ■ Hazards and Hazardous Materials
- ■ Hydrology/Water Quality
- ■ Land Use/Planning
- ☐ Mineral Resources
- ■ Noise
- ☐ Population/Housing
- ■ Public Services
- ☐ Recreation
- ■ Transportation/Traffic
- ■ Utilities/Service Systems
- ■ Mandatory Findings of Significance

10 DETERMINATION

On the basis of this environmental checklist/initial study:

☐ I find that the proposed project COULD NOT have a significant effect on the environment and a NEGATIVE DECLARATION will be prepared.

■ I find that although the proposed project could have a significant effect on the environment, there will not be a significant effect in this case because revisions in the project have been made by or agreed to by the project proponent. A MITIGATED NEGATIVE DECLARATION will be prepared.

☐ I find that the proposed project MAY have a significant effect on the environment and an ENVIRONMENTAL IMPACT REPORT is required.

☐ I find that the proposed project MAY have a "potentially significant impact" or "potentially significant unless mitigated" impact on the environment, but at least one effect (a) has been adequately analyzed in an earlier document pursuant to applicable legal standards, and (b) has been addressed by mitigation measures based on the earlier analysis as described on attached sheets. An ENVIRONMENTAL IMPACT REPORT is required, but it must analyze only the effects that remain to be addressed.

☐ I find that although the proposed project could have a significant effect on the environment, because all potentially significant effects (a) have been analyzed adequately in an earlier environmental impact report or mitigated negative declaration pursuant to applicable standards, and (b) have been avoided or mitigated pursuant to that earlier environmental document, including revisions or mitigation measures that are imposed upon the proposed project and that a subsequent document containing updated and/or site specific information should be prepared pursuant to CEQA Sections 15162/15163/15164.

☐ I find that although the proposed project could have a significant effect on the environment, because all potentially significant effects (a) have been analyzed adequately in an earlier environmental impact report or mitigated negative declaration pursuant to applicable standards, and (b) have been avoided or mitigated pursuant to that earlier environmental document, including revisions or mitigation measures that are imposed upon the proposed project, nothing further is required.

_____ _____

Jennifer Carman, AICP, Director Date
Planning and Environmental Review Department

11 EVALUATION OF ENVIRONMENTAL IMPACTS

a) A brief explanation is required for all answers except "No Impact" answers that are adequately supported by the information sources a lead agency cites in the parentheses following each question. A "No Impact" answer is adequately supported if the referenced information sources show that the impact simply does not apply to projects like the one involved (e.g., the project falls outside a fault rupture zone). A "No Impact" answer should be explained where it is based on project-specific factors as well as general standards (e.g., the project will not expose sensitive receptors to pollutants, based on a project-specific screening analysis).

b) All answers must take into account the whole action involved, including off-site as well as on-site, cumulative as well as project-level, indirect as well as direct, and construction as well as operational impacts.

c) Once the lead agency has determined that a particular physical impact may occur, then the checklist answers must indicate whether the impact is potentially significant, less than significant with mitigation, or less than significant. "Potentially Significant Impact" is appropriate if there is substantial evidence that an effect may be significant. If there are one or more "Potentially Significant Impact" entries when the determination is made, an EIR is required.

~~a.~~d) "Negative Declaration: Less Than Significant With Mitigation Incorporated" applies where the incorporation of mitigation measures has reduced an effect from "Potentially Significant Impact" to a "Less Than Significant Impact." The lead agency must describe the mitigation measures, and briefly explain how they reduce the effect to a less than significant level (mitigation measures from "Earlier Analysis," as described in [e] below, may be cross-referenced).

~~b.~~e) Earlier analyses may be used where, pursuant to the tiering, program EIR, or other California Environmental Quality Act (CEQA) process, an effect has been adequately analyzed in an earlier EIR or negative declaration. Section 15063(c)(3)(D). In this case, a brief discussion should identify the following:

~~a.~~1) Earlier Analysis Used. Identify and state where they are available for review.

~~b.~~2) Impacts Adequately Addressed. Identify which effects from the above checklist were within the scope of and adequately analyzed in an earlier document pursuant to applicable legal standards, and state whether such effects were addressed by mitigation measures based on the earlier analysis.

~~c.~~3) Mitigation Measures. For effects that are "Less Than Significant With Mitigation Measures Incorporated," describe the mitigation measures which were incorporated or refined from the earlier document and the extent to which they address site-specific conditions for the project.

f) Lead agencies are encouraged to incorporate into the checklist references to information sources for potential impacts (e.g., general plans, zoning ordinances). References to a previously prepared or outside document should, where appropriate, include a reference to the page or pages where the statement is substantiated.

g) Supporting Information Sources: A source list should be attached, and other sources used or individuals contacted should be cited in the discussion.

h) Lead agencies should normally address the questions from this checklist that are relevant to a project's environmental effects in whatever format is selected. The explanation of each issue should identify:

~~1.~~1) The significance criteria or threshold, if any, used to evaluate each question

~~2.~~2) The mitigation measure identified, if any, to reduce the impact to a less than significant level

This IS/MND distinguishes two types of mitigation measures: 1) measures required to reduce an impact below the level of significance; and 2) those measures recommended to minimize an impact that is less than significant.

12 ISSUE AREAS

12.1 Aesthetics

Would the project:	Potentially Significant Impact	Less Than Significant With Mitigation Incorporated	Less Than Significant Impact	No Impact	See Prior Document
a. Have a substantial adverse effect on a scenic vista?				■	
b. Substantially damage scenic resources, including but not limited to, trees, rock outcroppings, and historic buildings within a state scenic highway?			■		
c. Substantially degrade the existing visual character or quality of the site and its surroundings?			■		
d. Create a new source of substantial light or glare which would adversely affect day or nighttime views in the area?			■		

Existing Setting

The proposed project is located in Goleta's Old Town Heritage District. The Visual and Historic Resources Element of Goleta's 2006 General Plan specifies that all design in Old Town ~~shall~~ must maintain and enhance the historic character and be consistent with the Goleta Heritage District Architecture and Design Guidelines. These guidelines were developed to "enhance the image of Old Town, ensure development of a distinctive and unified streetscape, and contribute to a more pedestrian oriented downtown area." In addition, General Plan policy VH 2.6 specifies that a prominent gateway to the City should be created at this location, among several others. The policy lists examples of design features that can be used to create such gateways, including specimen trees, accent plantings, signage, public art, monuments, decorative pavement, and pedestrian amenities. Goleta's Design Review Board would conduct public meetings to review architectural and landscaping design elements of the project during design phases.

The project site is not visible from Highway 101, which is an Eligible State Scenic Highway. The project site is not near any classified scenic byways and is not itself classified as a national scenic highway or byway. Additionally, no protected scenic waterways flow through the project site. SR 217 is an elevated roadway adjacent to the project API that provides expansive ocean views (to the south) and mountain views (to the north). As a result, the Goleta General Plan lists SR 217 as a local scenic corridor.

The existing visual character of the project site is typical of an urban arterial and freeway interchange (Photograph 1). There are multiple on- and off-ramps, street lights, and traffic signals. To the west of SR 217, Hollister Avenue is a main business and commercial thoroughfare. ~~For instance, a vacant restaurant and the Mission City Auto Center sit at the southwest corner of Hollister Avenue and SR 217~~ .Large commercial signs, intended to be visible to motorists, are scattered along this western section of Hollister Avenue. Commercial activities are more limited immediately east of SR 217/Hollister Avenue, where a large orchard of lemon trees is located on the south side of Hollister Avenue (east of SR 217). In general, the visual quality of the area immediately adjacent to the proposed project is low to moderate.

Photograph 1: Existing Conditions View of SR-217 and the Hollister Avenue Bridge (looking east along Hollister Avenue).

The visual landscape, particularly to the west of SR 217 along Hollister Avenue, ~~is not intact and~~ is an eclectic mix of commercial businesses with minimal landscaping or native foliage. The landscape as a whole has little visual coherence or compositional harmony. However, there are two areas that have some visual unity in the general vicinity of the project site and, according to the Goleta General Plan/Coastal Land Use Plan, should be protected from adverse visual impacts. These areas include the large lemon orchard on the southeastern corner of Hollister Avenue/SR 217 and the Sexton House to the north of the orchard, across Hollister Avenue, with its attractive landscaping and mature trees. As noted, the City of Goleta lists SR 217 as a local scenic corridor because its elevated location provides expansive ocean and mountain views.

Photograph 1 views east along Hollister Avenue and illustrates the visual setting of the project. The low concrete structure and the tubular metal railing of the existing bridge are

visible in the center/left portion of the photograph. Additional views of the existing bridge and adjacent portions of the north and south sides of San Jose Creek are presented in Photographs 2 through 6. The Habitat Restoration Opportunity Zone is presented in Photographs 7 through 8.

Photograph 2: Existing Conditions View of Hollister Avenue Bridge (looking east at southern side of bridge).

Photograph 3: Existing Conditions View of Hollister Bridge (looking west at northern side of bridge).

Photograph 4: Existing Conditions Detail View of Hollister Avenue Bridge (looking north towards northern side of bridge).

Photograph 5: Existing Conditions South of Hollister Avenue Bridge (looking south at the channelized San Jose Creek and the small steel bridge).

Photograph 6: Detail of Existing Steel Bridge across San Jose Creek (looking south from Hollister Avenue Bridge).

Photograph 7: Detail of Habitat Restoration Opportunity Zone; View South (Downstream) of Dense Giant Reed Stands on the East Bank of San Jose Creek.

Photograph 8: Detail of Habitat Restoration Opportunity Zone; Dense Giant Reed Stands on Left Side of Photo and Arroyo Willow Thickets on Right Side of Photo, Located East of San Jose Creek.

Thresholds of Significance

A significant aesthetic impact would be expected to occur if the project resulted in any substantial adverse effects to resources noted in the above checklist and in the City's *Environmental Thresholds and Guidelines Manual*.

Project Specific Impacts

a-c) There are no scenic vistas within the API (Figure 3). Views of the large lemon orchard on the southeastern corner of Hollister Avenue/SR 217 and the Sexton House to the north of the orchard, across Hollister Avenue would not be blocked or otherwise adversely affected. SR 217 is a local scenic corridor because of the expansive ocean and mountain views it provides to its motorists, but it is elevated high over Hollister Avenue and the bridge would not affect scenic views from SR 217.

The proposed project would not adversely affect scenic resources or the visual quality and character of the area. The proposed replacement bridge would be similar to the existing bridge in its street-level elevation. ~~but t~~The replacement bridge project, however, would include architectural and landscaping design elements that would enhance the visual character and quality of Hollister Avenue.

In addition, ~~it is important to note that~~ according to the Goleta General Plan/Coastal Land Use Plan, the Hollister Avenue intersection at SR 217 is recognized as an area that should be enhanced in the future to create prominent gateways to Goleta. The proposed improvements would assist in meeting this objective at the SR 217/Hollister Avenue intersection.

d) Hollister Avenue currently has street lighting in the vicinity of the project site. The proposed project would replace the existing bridge and would not introduce new lighting to the area, although the new streetlights may not look identical to the existing lighting. Therefore, no significant adverse light or glare impacts would result.

Cumulative Impacts

The project would not contribute to any adverse cumulative impacts on visual resources.

Required Mitigation Measures

No mitigation measures are required or recommended.

Residual Impact

Residual impact on visual resources would be less than significant.

12.2 Agriculture and Forest Resources

Would the project:	Potentially Significant Impact	Less Than Significant With Mitigation Incorporated	Less Than Significant Impact	No Impact	See Prior Document
a. Convert Prime Farmland, Unique Farmland, or Farmland of Statewide Importance (Farmland), as shown on the maps prepared pursuant to the Farmland Mapping and Monitoring Program (FMMP) of the California Resources Agency, to non-agricultural use?				■	
b. Conflict with existing zoning for agricultural use or a Williamson Act contract?				■	
c. Involve other changes in the existing environment which, due to their location or nature, could result in conversion of Farmland, to non-agricultural use or conversion of forest land to non-forest use?				■	
d. Conflict with existing zoning for, or cause rezoning of, forest land (as defined in Public Resources Code Section 12220(g)), timberland (as defined by Public Resources Code Section 4526), or timberland zoned Timberland Production (as defined by Government Code Section 51104(g))?				■	
e. Result in the loss of forest land or conversion of forest land to non-forest use?				■	

Existing Setting

The project site is located within an urban corridor and is primarily surrounded by commercial uses such as car dealerships and vacant land. There are no agricultural resources on or adjacent to the project site; nor is the site or adjacent land designated for agricultural uses in the General Plan. The Santa Barbara County 2010 Important Farmland Map prepared as part of the Important Farmland Mapping and Monitoring Program (FMMP) identifies the project site as “urban and built-up land.” The project site is not subject to a Williamson Act contract.

Thresholds of Significance

A significant impact to agricultural resources would be expected to occur if the project resulted in any substantial adverse effects to resources –noted in the above checklist. Additionally, a project may result in a significant environmental effect on agricultural resources if it conflicts with adopted environmental plans and goals of the City or converts prime agricultural land to non-agricultural use or impairs the agricultural productivity of prime agricultural land.

Project Specific Impacts

a-e) The proposed project would replace an existing bridge with associated improvements; ~~and~~ it would not introduce a new use to the area. The project would not affect, displace, or occur adjacent to any Prime Farmland, Unique Farmland, or Farmland of Statewide Importance pursuant to the FMMP. The project would not conflict with any existing zoning for agricultural use, Williamson Act contracts or other changes to the environment resulting in conversion of farmland to non-agricultural use or forestland or timberland to non-forest use. Therefore, no impacts on agricultural and/or forest resources would result from the proposed project.

Cumulative Impacts

Since the proposed project would not conflict with any existing zoning for agricultural use, Williamson Act contracts or other changes to the environment resulting in conversion of farmland to non-agricultural use or forestland or timberland to non-forest use, no adverse cumulative impacts would result.

Required Mitigation Measures

No mitigation measures are required or recommended for agricultural resources.

Residual Impact

No residual impacts on agricultural and forestry resources would result.

12.3 Air Quality

Would the project:	Potentially Significant Impact	Less Than Significant With Mitigation Incorporated	Less Than Significant Impact	No Impact	See Prior Document
a. Conflict with or obstruct implementation of the applicable air quality plan?			■		
b. Violate any air quality standard or contribute substantially to an existing or projected air quality violation?		■			
c. Result in a cumulatively considerable net increase of any criteria pollutant for which the project region is in non-attainment under an applicable federal or state ambient air quality standard (including releasing emissions which exceed quantitative thresholds for ozone precursors)?			■		
d. Expose sensitive receptors to substantial pollutant concentrations?		■			
e. Create objectionable odors affecting a substantial number of people?			■		

A Criteria Pollutant Emissions technical memorandum was prepared for the proposed project. See Appendix B.

Existing Setting

The climate in and around the City of Goleta, as well as most of Southern California, is controlled largely by the strength and position of the subtropical high-pressure cell over the Pacific Ocean. This high-pressure cell typically produces a Mediterranean climate with warm summers, mild winters, and moderate rainfall. This pattern is periodically interrupted by periods of extremely hot weather brought in by Santa Ana winds. Almost all precipitation occurs between November and April, although during these months, the weather is sunny or partly sunny a majority of the time. Cyclic land and sea breezes are the primary factors affecting the region's mild climate. The daytime winds are normally sea breezes, predominantly from the west, that flow at relatively low velocities.

Additionally, cool, humid, marine air causes frequent fog and low clouds along the coast, generally during the night and morning hours in the late spring and early summer.

Surface temperature inversions (0 to 500 feet) are most frequent during the winter, and subsidence inversions (1,000 to 2,000 feet) are most frequent during the summer. Inversions are an increase in temperature with height and are directly related to the stability of the atmosphere. Inversions act as a cap to the pollutants that are emitted below or within them. The subsidence inversion is very common during the summer along the California coast, and is one of the principal causes of air stagnation. Poor air quality is usually associated with air stagnation (high stability/restricted air movement).

Air Quality Standards – Criteria Pollutants

The federal government and the State of California have established air quality standards and emergency episode criteria for various pollutants. Generally, state regulations have stricter standards than those at the federal level. Air quality standards are set at concentrations that provide a sufficient margin of safety to protect public health and welfare. Air quality at a given location can be described by the concentration of various pollutants in the atmosphere. The significance of a pollutant concentration is determined by comparing the concentration to an appropriate federal and/or state ambient air quality standard.

Federal standards are established by the U.S. Environmental Protection Agency (EPA) and are termed the National Ambient Air Quality Standards (NAAQS). The state standards are established by the California Air Resources Board (CARB) and are called the California Ambient Air Quality Standards (CAAQS). The region generally has good air quality, as it attains or is considered in maintenance status for most ambient air quality standards. The Santa Barbara County Air Pollution Control District (SBCAPCD) is required to monitor air pollutant levels to assure that federal and state air quality standards are being met.

Criteria Pollutants

The criteria pollutants of primary concern include ozone (O_3), carbon monoxide (CO), nitrogen dioxide (NO_2), particulate matter less than 10 microns in diameter (PM_{10}), and particulate matter less than 2.5 microns in diameter ($PM_{2.5}$). Although there are no ambient standards for volatile organic compounds/reactive organic gases (VOC/ROC) or nitrogen oxides (NO_X), they are important as precursors to O_3.

Ozone air pollution is formed when NO_X and ROCs react in the presence of sunlight. According to the SBCAPCD, the major sources of ozone precursor emissions in Santa Barbara County are motor vehicles, the petroleum industry, and solvent usage (paints, consumer products, and certain industrial processes). Sources of PM_{10} include grading, demolition, agricultural tilling, road dust, mineral quarries, and vehicle exhaust.

In most cases, California's air quality standards are more protective of health than the federal standards. Santa Barbara County was designated unclassifiable/attainment for the 2008 federal 8-hour ozone standard on April 30, 2012~~.~~ (t~~T~~he 1-hour federal ozone standard was revoked for Santa Barbara County~~.~~). The California 8-hour ozone standard was implemented in May, 2006. The County violates the state 8-hour ozone standard and the state standard for PM_{10}. The County is unclassifiable/attainment for the federal $PM_{2.5}$ standard and unclassified for the state $PM_{2.5}$ standard (based on monitored data from 2007–2009)~~.~~ (SBCAPCD 2013).

Thresholds of Significance – Criteria Pollutants

Per the City of Goleta's Environmental Thresholds and Guidelines Manual, a significant adverse air quality impact may occur when a project, individually or cumulatively, triggers either of the following:

- Interferes with progress toward the attainment of the ozone standard by releasing emissions which equal or exceed the established long-term quantitative thresholds for NO_X and ROC; or
- Equals or exceeds the state or federal ambient air quality standards for any criteria pollutant (as determined by modeling).

The SBCAPCD does not currently have quantitative thresholds of significance in place for short-term or construction emissions. ~~; however, t~~The SBCAPCD, however, uses 25 tons per year for ROC or NO_X as a guideline for determining the significance of construction impacts.

~~Under~~ SBCAPCD Rule 202(D)~~.~~(16) provides as follows: ~~, if the combined emissions from all construction equipment used to construct a stationary source which requires an Authority to Construct permit have the potential to exceed 25 tons of any pollutant, except carbon monoxide, in a 12-month period, the owner of the stationary source shall provide offsets under the provisions of Rule 804 and shall demonstrate that no ambient air quality standard will be violated.~~

> "[I]f the combined emissions from all construction equipment used to construct a stationary source … have a projected actual in excess of 25 tons of any pollutant, except carbon monoxide, in a 12 month period, the owner of the stationary source shall provide offsets as required [by SBCAPCD's rules] and shall demonstrate that no ambient air quality standard would be violated."

No quantitative threshold has been established for short-term, construction related PM_{10} (50 percent of total dust). However, Santa Barbara County ~~is not in compliance~~does not comply ~~e~~ with state standards for airborne PM_{10}.~~,~~ ~~therefore~~Accordingly, construction generated fugitive dust is subject to the City's standard dust mitigation requirements.

This project involves demolition of an existing structure. This structure may contain friable asbestos, a federally regulated hazardous air pollutant under the National Emissions Standards for Hazardous Air Pollutants (NESHAP). Friable asbestos poses a serious health hazard, as these fibers can become permanently lodged in body tissues. Since there is no known safe level of exposure, any asbestos exposure is considered potentially significant.

In cases where the SBCAPCD is a lead agency for the environmental review, ~~they~~ it requires quantification of risk from air pollutants that may toxic or unhealthful health attributes. However, these are typically for stationary source projects not involving asbestos. Asbestos emissions are minimized and eliminated by adherence to prescriptive handling and work practices from Cal Federal Occupational Safety and Health Administration (OSHA) and the EPA.

Project Specific Impacts

a,c) The proposed project would replace an existing bridge and would not introduce a new use into the area that could generate additional emissions. The Project would not induce growth nor would the project generate new traffic. It would not cause any new significant long-term traffic emissions. Therefore, the proposed Project would not conflict or obstruct implementation of applicable air quality plans nor would it result in a cumulatively considerable net increase of any criteria pollutant.

b,d) The proposed project would replace an existing bridge and would not introduce a new use to the area that could generate additional emissions. New sources of emissions would primarily be associated with short-term temporary construction activities.

This project involves demolition of an existing structure. This structure may contain friable asbestos, a federally regulated hazardous air pollutant under NESHAP. Friable asbestos poses a serious health hazard, as these fibers can become permanently lodged in body tissues. Since there is no known safe level of exposure, this impact is considered potentially significant, but mitigable.

Criteria pollutant emissions resulting from the construction of the project were quantified using construction data provided by the Project engineer. Emission factors and other data are from the CalEEMod California Emissions Estimator Model™ version 2013.2.2 (successor to planning level emissions estimating software, URBEMIS). This software was used as the criteria pollutant quantification tool for this project. The project engineer estimated the project construction activities would occur over a 24-month period. The Criteria Pollutant Emissions technical memorandum prepared for the proposed project is included as Appendix B. The results of the criteria pollutant emissions calculation indicate that all emissions of ROC and NO_X are below 25 tons per year with implementation of required construction related mitigation measures AQ-1

through AQ-5. Project impact would be less than significant with mitigation incorporated.

~~In a public comment on the Draft IS/MND, Mr. Michael Goldman, a local resident, commented that the IS/MND should quantify emissions of diesel particulate matter during construction. However, a~~As described in detail in Appendix K, quantification of temporary, short-term construction emissions is neither recommended nor required by regulatory agencies and applicable guidelines.

e) The proposed project would replace an existing bridge. Construction of the new roadway would require application of asphalt concrete (asphalt) and the use of heavy equipment that potentially creates objectionable odors. However, such odors are temporary and localized and would cease after construction. Long-term operation of the project would not result in an increase in traffic or other conditions that could create objectionable odors compared to existing conditions. Therefore, project impacts related to objectionable odors would be less than significant.

~~The proposed project would replace an existing and long-term operation of the project would not create objectionable odors affecting a substantial number of people. Construction of the new roadway would require application of asphalt concrete (asphalt). This asphalt concrete application potentially creates objectionable odors. However, such odors are temporary and localized. SBCAPCD Rule 329, a prohibitory rule governing the application and cutback and emulsified asphalt paving materials in the County, would apply to all Project paving activities. Therefore, project impacts related to objectionable odors would be less than significant.~~

Cumulative Impacts

The proposed project would replace an existing bridge and would not introduce a new use to the area that could generate additional emissions. New sources of emissions would primarily be associated with short-term temporary construction activities, and mitigation measures AQ-1 through AQ-9 have been incorporated to reduce the potential impacts associated with short-term construction activities. Therefore, the proposed project's contribution to any cumulative impact on air quality would be less than significant.

Required Mitigation Measures

The following mitigation measures are required:

AQ-1 All portable diesel-powered construction equipment over 50 horsepower ~~shall~~ must be registered with the Statewide Portable Equipment Registration Program (PERP) ~~state's portable equipment registration program~~ OR ~~shall~~ obtain an SBCAPCD permit.

Plan Requirements and Timing: These requirements ~~shall~~ must be included in construction contract documents and specifications.

Monitoring: ~~City staff shall~~The Public Works Director, or designee, must ensure specifications are printed on construction plans.

AQ-2 Fleet owners of mobile construction equipment must comply with ~~are subject to the CARB Regulation for In-use Off-road Diesel Vehicles (Title~~ 13 California Code of Regulations (CCR) ~~, Chapter 9,~~ § 2449 regulating off-road diesel vehicles ~~), the purpose of which is~~ to reduce diesel particulate matter (PM) and criteria pollutant emissions from in-use (existing) off-road diesel-fueled vehicles.

Plan Requirements and Timing: These requirements ~~shall~~ must be included in the construction contract documents and specifications.

Monitoring: ~~City staff shall~~The Public Works Director, or designee, must ensure specifications are printed on construction plans.

AQ-3 All commercial diesel vehicles must comply with 13 CCR § ~~are subject to Title 13, §~~ 2485 ~~of the California Code of Regulations,~~ limiting engine idling time. Idling of heavy-duty diesel construction equipment and trucks during loading and unloading ~~shall be~~ is limited to five minutes; electric auxiliary power units should be used whenever possible.

Plan Requirements and Timing: These requirements ~~shall~~ must be included in the construction contract documents and specifications.

Monitoring: ~~City staff shall~~The Public Works Director, or designee, must ensure specifications are printed on construction plans.

AQ-4 If the construction site is graded and left undeveloped for over four weeks, the City or its qualified contractor ~~shall~~ must utilize ~~employ~~ the following methods immediately to inhibit dust generation:

a. Seeding and watering to revegetate graded areas; and/or

b. Spreading of soil binders; and/or

c. Any other methods deemed appropriate by the ~~Community Services~~ Public Works Director, or designee, and in accordance with the Contract Special Provisions and the Caltrans Standard Specifications.

Plan Requirements and Timing: These requirements ~~shall~~ must be included in the construction contract documents and specifications.

Monitoring: ~~City staff shall~~ The Public Works Director, or designee, must ensure specifications are printed on construction plans. The City's construction manager or representative ~~shall~~ must perform periodic site inspections to verify compliance as well as contact the designated monitor as necessary to ensure compliance with dust control measures.

AQ-5 The City or its qualified contractor ~~shall~~ must submit to the SBCAPCD a completed *Asbestos Demolition/Renovation Notification* form and comply with the *National Emission Standards for Hazardous Air Pollutants-Asbestos* for all demolition activities. Demolition notifications are required regardless of whether asbestos is present or not.

Plan Requirements and Timing: The contractor ~~shall~~ must provide written verification that a completed *Asbestos Demolition/Renovation Notification* form has been submitted to the SBCAPCD. In addition, all demolition activities ~~shall~~ must comply with the *National Emission Standards for Hazardous Air Pollutants-Asbestos*. The completed notification should be presented or mailed to the SBCAPCD within a minimum of 10 working days advance notice ~~prior to~~before disturbing asbestos in a renovation or starting work on a demolition. These requirements ~~shall~~ must be met ~~prior to~~before the start of demolition.

Monitoring: The City's construction manager or representative ~~shall~~ must monitor in the field for compliance.

AQ-6 Dust generated by construction and/or demolition activities ~~shall~~ must be kept to a minimum in accordance with the current edition of the ~~Caltrans~~ California Department of Transportation (Caltrans) Standard Specifications § ~~, Section~~ 14-9.03 and SBCAPCD~~Air Quality District~~ Rule 345.

The following dust control measures listed below ~~shall~~ must be implemented by the contractor:

- a. During clearing, grading, earth moving, excavation, or transportation of cut or fill materials, water trucks or sprinkler systems are to be used to prevent dust from leaving the site and to create a crust after each day's activities cease.
- b. During construction, water trucks or sprinkler systems shall be used to keep all areas of vehicle movement damp enough to prevent dust from leaving the site (dust emissions at the property line ~~shall~~ cannot exceed 20 percent opacity more than an aggregate of 3 minutes in any 60 minute period). At a minimum, this would include wetting down such areas in the late morning and after work is completed for the day. Increased watering frequency ~~shall~~ must occur whenever wind exceeds 15 miles per hour

(mph). If wind speeds increase to the point when such measures cannot prevent dust from leaving the site, construction activities ~~shall~~ must be suspended.

- c. Grading and scraping operations ~~shall~~ must be suspended when wind speeds exceed 20 mph.
- d. Gravel pads, knock-off plates, or similar BMPs ~~shall~~ must be installed at all access points to the project site to prevent tracking of mud onto roadways.
- e. Soil stockpiled for more than two days ~~shall~~ must be covered, kept moist, or treated with soil binders to prevent dust generation. Trucks transporting soil material to and from the site ~~shall~~ must be tarped from the point of origin.
- f. All gravel, dirt, and construction material ~~shall~~ must be cleaned from the right-of-way at a minimum of once a day at the end of the work day.
- g. After clearing, grading, earth moving, and/or excavation is complete, the disturbed area ~~shall~~ must be treated by watering, or revegetating, or by spreading soil binders until the area is paved or otherwise developed in a manner that prevents dust generation. The City's construction manager or representative ~~shall~~ must ensure that the construction contractor designates a person or persons to monitor the dust control program and to order increased watering as necessary to prevent transport of dust off-site. ~~Their~~ City's representatives' duties ~~shall~~ must include holiday and weekend periods when work may not be in progress.

Plan Requirements and Timing: All of the requirements noted above ~~shall~~ must be included in the construction contract documents and specifications.

Monitoring: The Public Works Director, or designee, must ensure that the City's construction manager or representative ~~shall~~ performs periodic site inspections to verify compliance as well as contact the designated monitor as necessary to verify compliance with dust control measures.

AQ-7 Grading and construction contracts must specify that contractors ~~shall~~ adhere to the requirements that reduce emissions of ozone precursors and particulate emissions from diesel exhaust:

a. Diesel construction equipment meeting the CARB Tier 1 emission standards for off-road heavy-duty diesel engines ~~shall~~ must be used. Equipment meeting CARB Tier 2 or higher emission standards should be used to the maximum extent feasible.

b. Diesel powered equipment should be replaced by electric equipment whenever feasible.

c. If feasible, diesel construction equipment ~~shall~~ must be equipped with selective catalytic reduction systems, diesel oxidation catalysts, and diesel particulate filters as certified and/or verified by CARB or the EPA.

d. Catalytic converters ~~shall~~ must be installed on gasoline-powered equipment, if feasible.

e. All construction equipment ~~shall~~ must be maintained ~~in tune~~ per ~~the~~ manufacturer's specifications.

f. Construction equipment operating simultaneously ~~shall~~ must be minimized through efficient management practices to ensure that the smallest practical number is operating at any one time.

Plan Requirements and Timing: The Public Works Director, or designee, must ~~City staff shall~~ ensure construction contract documents and specifications include these measures, including provision for construction management reports to verify compliance.

Monitoring: The Public Works Director, or designee, must ensure that the City's construction manager or representative ~~shall verify~~ verifies construction emission requirements are included in all construction specifications.

AQ-8 Diesel fuel emissions ~~shall be~~are limited as set forth in this condition.

Plan Requirements and Timing: The following limitations on diesel-fueled vehicles in excess of 10,000 pounds ~~shall~~ apply during all construction and subsequent operational activities:

~~•~~a. Diesel-fueled vehicles in excess of 10,000 pounds ~~shall~~ cannot use diesel fueled auxiliary power units for more than five minutes to power heater, air conditioner, or other ancillary equipment on any such vehicle. These requirements ~~shall~~ must be included in the construction contract documents and specifications. The location and information provided on the sign(s) ~~shall~~ must be reviewed and approved by City's construction manager or representative prior to start of construction.

Monitoring: The Public Works Director, or designee, must ensure that ~~T~~the City's construction manager or representative ~~shall~~ monitor in the field for compliance.

AQ-9 Transport of all exported cut material from the project implementation ~~shall~~ must be tarped from the project site to the point of storage.

Plan Requirements and Timing: This requirement ~~shall~~ must be included in construction contract documents and specifications.

Monitoring: The Public Works Director, or designee, must ensure that ~~T~~the City's construction manager or representative ~~shall~~ monitors in the field for compliance.

Residual Impact

Implementation of the proposed Project would result in short-term construction-related impacts, which would be considered adverse, but less than significant with incorporation of mitigation measures noted above, which would reduce PM_{10} emissions as well as equipment exhaust and diesel exhaust emissions and pollutants. Consequently, under implementation of the proposed Project, residual impacts to air quality would remain less than significant.

12.4 Biological Resources

Would the project:	Potentially Significant Impact.	Less Than Significant With Mitigation Incorporated	Less Than Significant Impact	No Impact	See Prior Document
a. Have a substantial adverse effect, either directly or through habitat modifications, on any species identified as a candidate, sensitive, or special status species in local or regional plans, policies, or regulations, or by the California Department of Fish and Wildlife or U.S. Fish and Wildlife Service?		■			
b. Have a substantial adverse effect on any riparian habitat or other sensitive natural community identified in local or regional plans, policies, or regulations, or by the California Department of Fish and Wildlife or U.S. Fish and Wildlife Service?		■			
c. Have a substantial adverse effect on federally protected wetlands as defined by Section 404 of the Clean Water Act (including, but not limited to, marsh, vernal pool, coastal, etc.) through direct removal, filling, hydrological interruption, or other means?			■		
d. Interfere substantially with the movement of any native resident or migratory fish or wildlife species or with established native resident or migratory wildlife corridors, or impede the use of native wildlife nursery sites?		■			
e. Conflict with any local policies or ordinances protecting biological resources, such as a tree preservation policy or ordinance?		■			

Would the project:	Potentially Significant Impact.	Less Than Significant With Mitigation Incorporated	Less Than Significant Impact	No Impact	See Prior Document
f. Conflict with the provisions of an adopted Habitat Conservation Plan, Natural Community Conservation Plan, or other approved local, regional, or state habitat conservation plan?				■	

A Biological Resource Summary Report was prepared for the proposed project. See Appendix C.

Existing Setting

San Jose Creek immediately upstream of the bridge structure is an intermittent stream that has an unvegetated sandy bed with some cobble, and arroyo willow thicket on its steep banks. On the level terrace east of the creek (outside of the creek bank), there are mature coast live oaks and southern California black walnut trees. The walnut trees are native, but were probably planted in the past as part of a commercial walnut orchard. The ground layer appears to have been repeatedly disturbed in the past by cultivation. This ground layer is vegetated almost entirely by non-native grasses and other non-native species. However, the thicket includes several arroyo willows and a patch of mugwort (*Artemisia douglasiana*).

In the area occupied by the existing bridge, San Jose Creek is confined by steeply sloped concrete sides and a concrete channel bottom in a configuration similar to a box culvert with the bridge deck forming the roof. A concrete apron and wing walls serve as a transition upstream between the concrete structure and the adjacent natural banks. The bridge structure is passable by terrestrial wildlife moving within the streambed during dry periods (the majority of the year), and appears passable by aquatic species provided flow conditions are appropriate. However, because the concrete channel bottom lacks features to concentrate or retard flows, flow beneath the bridge is likely characterized by higher velocities and lower depth than flow through natural portions of the creek. With the exception of a few herbaceous weeds growing through cracks in the concrete, vegetation is absent in this area.

Downstream of the existing steel bridge, construction of the San Jose Creek Capacity Improvement and Fish Passage Project was completed in 2013. The concrete channel that formerly occupied this area has been removed and replaced with a widened concrete channel with provisions for fish passage. Under current conditions, the portion of the API downstream of the existing bridge is primarily characterized by the concrete channel and paved and heavily disturbed bare ground. Vegetation is virtually absent in

this area, and the current value for biological resources is low. An acorn woodpecker granary in a dead trunk of a western sycamore on the west side of the creek outside of the API was observed by URS.

Vegetation

Locations of the various vegetation types in relation to the API are depicted on Figure 4. A complete list of plant species observed within the API is provided in Appendix C.

There is no vegetation on or under the bridge due to the concrete substrate. Vegetation south of the bridge, within the concrete channel, is virtually absent. The upland areas on the south side of Hollister Avenue are almost entirely developed with paving, a steel bridge, and landscaping. Two western sycamores and a third tree that is probably a London plane tree occur south of Hollister Avenue within the API.

Upstream (north) of the existing bridge structure, the vegetation along the creek consists of arroyo willow thicket, called "*Salix lasiolepis* Shrubland Alliance" (Sawyer *et al.* 2009). The dominant species is arroyo willow (*Salix lasiolepis*) with associated species include western sycamore (*Platanus racemosa*), California blackberry (*Rubus ursinus*), poison oak (*Toxicodendron diversilobum*), mugwort (*Artemisia douglasiana*), and others. This vegetation occurs on the steep creek banks and to some extent on the east and west uplands as well. The boundary of this community on the west side of the creek is limited by a chain link fence. Land west of the fence has been graded and is used as a commercial used car lot.

Arroyo willow thickets are identified by the CDFW (2010) as a sensitive terrestrial natural community, and are a common constituent of riparian corridors along the Southern California coast. Because arroyo willow is identified by the U.S. Army Corps of Engineers (USACE) as a wetland indicator species (Lichvar 2013), arroyo willow thickets normally meet the one-parameter definition of wetlands adopted by the City of Goleta. In total, approximately 0.22 acre of arroyo willow thicket is present within the bridge construction API and another 0.17 acre of arroyo willow is present within the potential Habitat Restoration Opportunity Zone.

The upland area on the east side of the creek and north of the bridge is disturbed and is vegetated by a mix of native and non-native trees dominated by non-native understory. These areas are characterized as mixed woodland; associated species include coast live oak (*Quercus agrifolia*) and several southern California black walnut trees (*Juglans californica*). (These appear to have been planted as part of a previously existing orchard, were cut, and have resprouted from their bases). One oak tree that may be interior live oak (*Quercus wislizeni*) or a hybrid that is not native to the Goleta Valley occurs on the eastern terrace and a second one occurs on the east bank of the creek. The understory is disturbed and consists primarily of annual non-native grasses in the southern portion of the mixed woodland and dominated by cape ivy (*Delairea odorata*) in the northern portion of the mixed woodland.

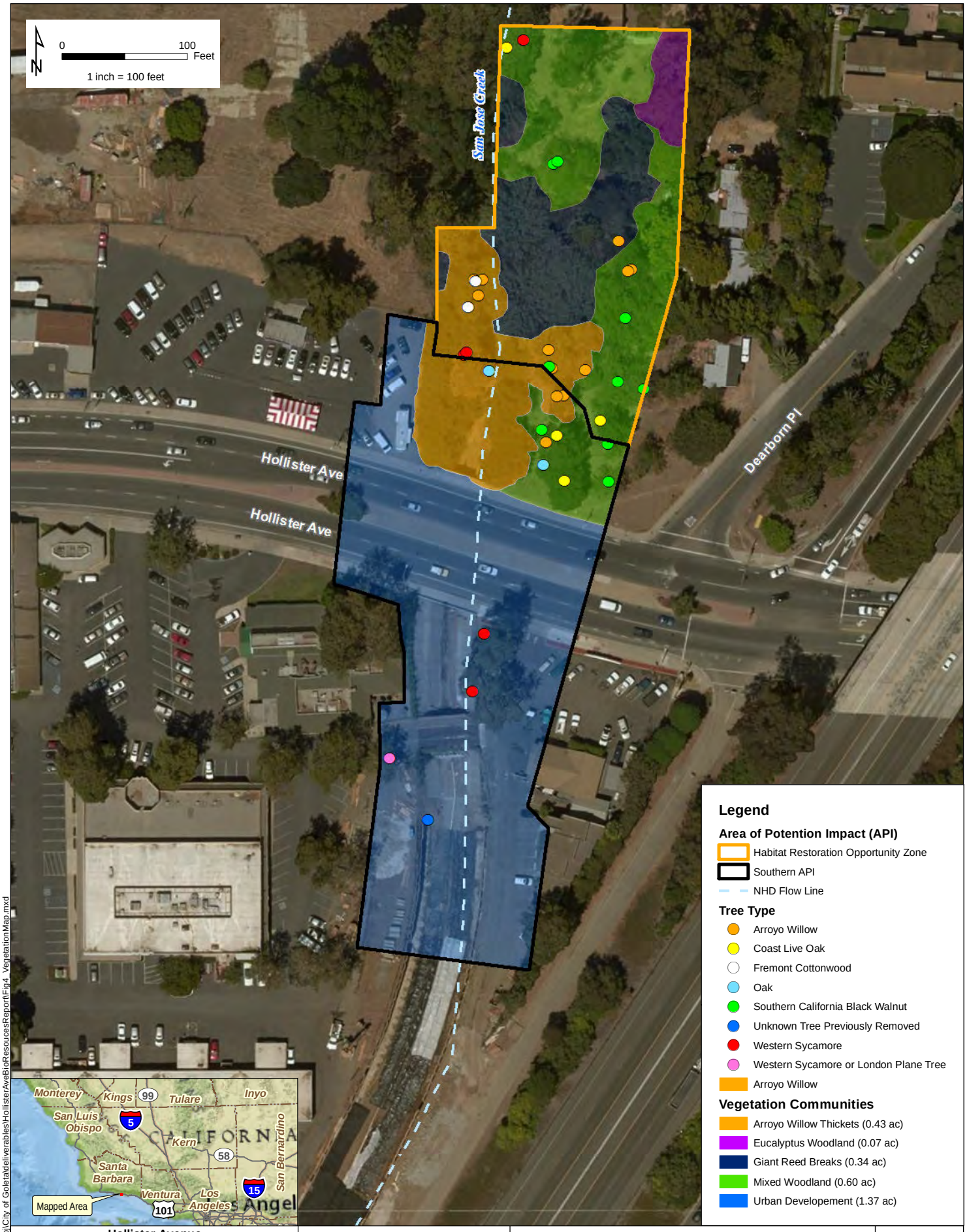

Hollister Avenue
Bridge Replacement Project
City of Goleta, CA
05-SB-0-GLTA BRLS-5481 (013)

URS Corporation

Source: [1] Bing Maps Aerial Hybrid accessed November 2014, [2] NHD 2014.

Figure 4. VEGETATION

2014

V:\Projects\GIS_Proj\City of Goleta\deliverables\HollisterAveBioResoucesReport\Fig4_VegetationMap.mxd

Dense concentrations of giant reed (*Arundo donax*) and other non-native species are located throughout the Habitat Restoration Opportunity Zone. The largest concentration of giant reed is located on the east bank of San Jose Creek, while smaller patches are located throughout the upland areas on the east side of the creek.

On-site, eucalyptus groves (*Eucalyptus* [*globulus, camaldulensis*]) are dominated by mature eucalyptus (*Eucalyptus globulus*) with a mostly barren understory. Eucalyptus groves are located in the northeast corner of the Habitat Restoration Opportunity Zone.

Jurisdictional Waters and Wetlands

Jurisdictional determinations and wetland delineations were conducted by URS in October 2013, October 2014, and November 2014. See Figure 5 depicting the jurisdictional boundaries and Appendix C for a complete description of jurisdictional determination and wetland delineation methodology and documentation. These surveys identified no wetland waters of the U.S., 0.106 acres (424 linear feet) of non-wetland waters, and 0.55 acres of CDFW-jurisdictional streambeds within the entire API (see Table 2). The paragraphs below describe the quantities of non-wetland waters and CDFW-jurisdictional streambeds within the southern portion of the API (i.e., the only portion of the API that would be directly affected by construction of the bridge) versus the Habitat Restoration Opportunity Zone that would only be used for biological mitigation.

Within the southern portion of the API, a total of 0.076 acre (202 linear feet) of non-wetland waters and 0.29 acres of CDFW-jurisdictional streambed occur. Of this total, 0.06 acres (130 linear feet) of non-wetland waters and 0.11 acres of CDFW-jurisdictional streambed occurs within channelized concrete (i.e., beneath and downstream of the existing bridge and concrete apron upstream) and 0.015 acres (65 linear feet) of non-wetland waters and 0.15 acres of CDFW-jurisdictional streambed of natural creek. Please see Table 2 for information regarding temporary versus permanent impacts within these areas.

Within the Habitat Restoration Opportunity Zone, 0.03 acres (222 linear feet) of non-wetland waters and 0.26 acres of CDFW-jurisdictional streambed occur. This area consists entirely of natural creek and all impacts will be temporary and beneficial in nature. No permanent impacts will occur.

The CDFW-jurisdictional streambed areas also meet the City of Goleta's adopted definition of a wetland. Activities affecting these areas would be regulated by the USACE pursuant to Section 404 of the CWA and by CDFW pursuant to Sections 1600 *et seq.* of the California Fish and Game Code.

V:\Projects\GIS_Proj\City of Goleta\deliverables\HollisterAve\SMND\Fig5_JurisdictionalAreas.mxd

Hollister Avenue
Bridge Replacement Project
City of Goleta, CA
05-SB-0-GLTA BRLS-5481 (013)

URS Corporation

Source: [1] Bing Maps Aerial Hybrid accessed November 2014, [2] NHD 2014.

Figure 5. Wetlands and Waters Jurisdictional Determination

2014

Table 2: Summary of Jurisdictional Impacts within the Area of Potential Impact for San Jose Creek

Location		Waters of the U.S.				
		Non-Wetland Waters of the U.S. (Acres)	Non-Wetland Waters of the U.S. (Linear Feet)	Wetland Waters (Acres)	Total Waters of the U.S. (Acres)	CDFW-Jurisdictional Streambeds (Acres)
Southern API (Bridge Construction Area)						
Concrete Channel	Temporary Impact Area	0	0	0	0	0
	Permanent Impact Area	0.06	130	0	0.06	0.11
Natural Channel	Temporary Impact Area	0.001	7	0	0.001	0.03
	Permanent Impact Area	0.015	65	0	0.015	0.15
Northern API (Habitat Restoration Opportunity Zone)						
	Temporary Impact Area	0.03	222	0	0.03	0.26
	Permanent Impact Area	0	0	0	0	0
	Total	0.106	424	0	0.106	0.55

Trees

There are approximately 45 trees within the southern portion of the API (i.e., the portion of the API affected by construction of the bridge), as identified in Table 3. There are approximately 71 trees within the Habitat Restoration Opportunity Zone as identified in Table 3. Locations of these trees can be viewed on Figure 4. Information regarding the diameter at breast height (DBH) and health of each of the individual trees is provided in the as Biological Resources Summary Report (Appendix C).

Table 3: Trees within the Area of Potential Impact

Scientific Name	Common Name	Number of Trees
Southern Portion of the API (affected by construction)		
Salix lasiolepis	Arroyo willow	35 +/-
Quercus agrifolia	Coast live oak	2
Platanus racemosa	Western sycamore	2
Juglans californica	Southern California black walnut	3
Quercus sp.	Oak (non-native)	2
Platanus x *hispanica* (?)	London plane tree (?)	1
Subtotal		45 +/-
Northern Portion of API (Habitat Restoration Opportunity Zone)		
Salix lasiolepis	Arroyo Willow	58 +/-
Quercus agrifolia	Coast live oak	2
Platanus racemosa	Western sycamore	3
Juglans californica	Southern California black walnut	6
Populus fremontii	Fremont cottonwood	2
Subtotal		71 +/-
Total		116 +/-

Sensitive Species of Concern

Southern tarplant (Centromadia parryi ssp. *australis)*

This species is listed by the California Native Plant Society (CNPS) as Rank 1B.1, meaning that it is rare, threatened or endangered in California and elsewhere, and that it is seriously threatened (CNPS 2013). It occurs in salt marshes, grassland, vernal pools and coastal scrub. There are records of this species from the immediate vicinity from 1959 (Consortium of California Herbaria 2013 and California Natural Diversity Database [CNDDB]). The site was visited by URS biologists during its flowering season (October 2013), when it has been observed in flower on other sites in the Goleta valley, and it was not observed. Therefore, this species is not expected to occur on the site.

Steelhead – Southern California Distinct Population Segment (DPS) (Oncorhynchus mykiss)

The Southern California steelhead DPS (which includes all naturally-spawned steelhead in streams between the Santa Maria River and the Mexican border, and is coterminous with the Southern California Evolutionarily Significant Unit for the species) is listed by the federal government as Endangered and is identified by the CDFW as a California Species of Special Concern (CDFW 2011). The reach of San Jose Creek upstream of Hollister Avenue is designated Critical Habitat for this species. Until recently, the stretch of creek downstream of Hollister Avenue was lined with concrete and was a complete barrier to upstream movement of steelhead (Stoecker 2002). This barrier was recently removed and replaced as a result of the San Jose Creek Capacity Improvement and Fish Passage Project that was designed to increase flood conveyance capacity and provide a migration habitat design for steelhead. The replacement bridge includes the same steelhead migration habitat design that ~~is currently under construction~~ was recently constructed downstream. The new bridge will span the creek and will be 23 feet longer than the current bridge, thus reducing channel constriction and facilitating upstream migration. Spawning and rearing habitat is not present in the immediate vicinity of the project. The creek was dry at the time of the URS surveys in June and October 2013 and no steelhead were observed.

California red-legged frog (Rana draytonii)

This species is listed as threatened under the Endangered Species Act, and is a California Species of Special Concern (CDFW 2011). The project site is not within Critical Habitat for California red-legged frog. This species inhabits pools of water, including marshes, streams, lakes, reservoirs, and ponds. It breeds in ponded water, but outside of the breeding season it may also be found in a variety of upland habitats (Stebbins 2003). Surveys for this species conducted in 2005 in the immediate vicinity of the Project did not result in observations of this species (SAIC 2007), and surveys conducted in 2010 also did not result in observations of this species (Entrix 2010). It was not observed by URS in 2013, and the CNDDB does not indicate any historic occurrences of this species within the San Jose Creek watershed. Based on this information, the California red-legged frog is not expected to occur within the project area.

Swallows

Barn swallow (*Hirundo rustica*), cliff swallow (*Petrochelidon pyrrhonota*), and northern rough-winged swallow (*Stelgidopteryx serripnnis*) were observed by URS in the project vicinity, although none of these species were observed nesting on the bridge in 2012 (URS 2012). Similarly, no swallow nests were observed on the bridge in 2007 (SAIC 2007). The following text provides brief descriptions of the status and the part of their life histories that occurs along the south coast of Santa Barbara County.

Barn swallow (*Hirundo rustica*). Barn swallow is a common spring and fall transient on the south coast. This species is not listed. Barn swallows nest on bridges and other structures, typically within one half mile of the coast. Spring transients arrive on the south coast by late February and continue to move through the county into late May. Fall migrants appear at the end of July, are fairly common through mid-September, and are rare after October (Lehman 2013).

Barn swallows are protected under the federal Migratory Bird Treaty Act of 1918. Thus, it is illegal to remove completed nests during the breeding season without a permit from the U.S. Fish and Wildlife Service. The barn swallow's protected status and its habit of nesting on bridges can create costly delays in construction on some bridge repair projects (Caltrans 2014)

Cliff swallow (*Petrochelidon pyrrhonota*). Cliff swallow is a common transient and summer resident in coastal Santa Barbara County. This species is not listed. Cliff swallows nest in large colonies under bridges, on buildings and rocky cliff faces. Spring migrants typically arrive in the coastal area in late February, although some arrive as early as the first week in February. It is uncommon in the local area by late August and is rare after the beginning of September, although some remain into October (Lehman 2013).

Cliff swallows are protected under the federal Migratory Bird Treaty Act of 1918 (16 USC §§ 703, *et seq.*). Thus, it is illegal to remove completed nests during the breeding season without a permit from the U.S. Fish and Wildlife Service. The cliff swallow's protected status and its habit of nesting on bridges can create costly delays in construction (Caltrans 2014).

~~In order to keep bridge construction and repair projects on schedule, Caltrans often installs netting to exclude barn swallows and cliff swallows prior to the birds' arrival. Due to resultant mortality of swallows, this practice has been contested and Caltrans has subsequently agreed to use alternative measures on two bridges in northern California (Los Angeles Times 2014).~~

Northern rough-winged swallow (*Stelgidopteryx serripennis*). Northern rough-winged swallow is a common transient and summer resident along the south coast. This species is not listed. Northern rough-winged swallows nest under bridges (including some in urban areas), in holes in steep banks and sea cliffs. Spring migrants appear as early as mid- to late-February, although they can arrive as early as the first week of February (Lehman 2013). Northern rough-winged swallows are protected under the federal Migratory Bird Treaty Act of 1918. Thus, it is illegal to remove completed nests during the breeding season without a permit from the U.S. Fish and Wildlife Service.

Bank swallow (*Riparia riparia*). Bank swallows were rare but regular migrants through Santa Barbara County into the early 1990s, but have declined since then, and today are rare. This species is a state-listed threatened species. Spring transients are typically

observed between mid-April and mid-May. Fall transients are typically observed between late August and early October. Bank swallows nest in tunnels in vertical sand banks. They no longer breed in southern California (Lehman 2013). Bank swallows are protected under the federal Migratory Bird Treaty Act of 1918. Thus, it is illegal to remove completed nests during the breeding season without a permit from the U.S. Fish and Wildlife Service.

Least Bell's vireo (Vireo bellii pusillus)

Listed by both the federal and state governments as endangered (CDFW 2013), this species was formerly more common and widespread as a summer resident in Santa Barbara County and throughout much of coastal southern California and the Central Valley. It breeds in riparian habitat dominated by willow-cottonwood forests. The population has declined significantly due to loss of riparian habitat and brood parasitism by brown-headed cowbirds (*Molothrus ater*) (Lehman 2012). Breeding occurred in the past along the Santa Ynez River. A singing bird was recorded from Carneros Creek near the Santa Barbara Airport in Goleta in May and June of 2010.~~, and spring and summer wanderers were found along Atascadero Creek in Goleta in May and June of 2002~~. This species is a casual fall migrant on the South Coast, with multiple records from Goleta and other coastal areas (Lehman 2012). URS conducted protocol surveys for least Bell's vireo for the City of Goleta's Ekwill/Fowler Project. The surveys were conducted along Old San Jose Creek, beginning roughly 650 feet southwest of the current project site and heading southwest from that point. No least Bell's vireos were observed or heard in the survey area during the protocol survey. As part of this effort, URS visited the current project site and assessed the suitability of the riparian habitat for this species, and concluded that the habitat was not suitable based on habitat structure, canopy cover, aspect, and anthropomorphic disturbance (URS 2012).

Warbling vireo (Vireo gilvus)

Warbling vireos usually nest in riparian systems with large, deciduous trees and a semi-open canopy. The west coast race, *V. g. swainsonii*, breeds from Baja California Norte northward to southeastern Alaska. In southern Santa Barbara County, and in coastal southern California in general, this species was formerly more common. Numbers have declined due to loss and degradation of riparian habitat and brood parasitism by brown-headed cowbird. Warbling vireo is known to breed along San Jose Creek north of US 101, and may have bred in recent years at Atascadero Creek, east of the Project site (Lehman 2012). URS observed a possible pair of warbling vireos in riparian habitat along Old San Jose Creek 650 feet or more southwest of the current project site in May and June of 2012 (URS 2012). However, no warbling vireos were observed within the project area. Although nesting within the API is possible, it is unlikely.

Wilson's warbler (Wilsonia pusilla)

Wilson's warblers breed in riparian vegetation, particularly areas with dense willows. They once were common breeders along the south coast but have declined in recent years, likely due to elimination and degradation of riparian habitat and brood parasitism by brown-headed cowbirds. They now only breed in small numbers on the south coast of Santa Barbara County (Lehman 2012). It is a common migrant in the area, but is an unlikely breeder within the API. No Wilson's warblers have been documented nesting in the area, and none were observed during the site visits.

Yellow warbler (Dendroica petechia)

When breeding, yellow warblers are a California Species of Special Concern (CDFW 2011). Yellow warblers breed in brushy riparian woodlands containing willows, cottonwoods, big-leaf maple, California sycamore, elderberry, or white alder. Yellow warblers are primarily threatened by loss of riparian habitat and brood parasitism by brown-headed cowbirds. A yellow warbler was observed in May and June of 2012 along Old San Jose Creek (URS 2012), roughly 650 feet or more southwest of the current Project site. However, no yellow warblers have been documented nesting in the area, and none were observed within the API.

Bats

A bat survey under the Hollister Avenue Bridge was conducted by the Central Coast Bat Research Group on October 10, 2014 (Heady and Frick 2014). Approximately 90 individuals were observed roosting in the cracks. Two species were observed: the western free-tailed bat (*Tadarida brasiliensis*) and Yuma myotis (*Myotis yumaensis*). Most of the individuals were western free-tailed bat. Additional surveys are planned to occur in 2015 to determine if additional bat species are present on the bridge.

There is also a large colony of western free-tailed bats under the Hollister Avenue bridge over Maria Ygnacio Creek near the project site; and there are colonies of pallid bat and Mexican free-tailed bat roosting on the Hollister Avenue/Cathedral Oaks ("Winchester Canyon") Bridge over US 101, approximately 4 miles west of the Hollister Avenue Bridge Replacement Project (California Coastal Commission 2009).

The following brief descriptions discuss the status and life history of the two species known to be using the bridge, as well as pallid bat because it is a Species of Special Concern and because it is known to be in the area and might be found to be using the bridge in future surveys planned to be conducted in 2015.

Western free-tailed bat (Tadarida brasiliensis). The western free-tailed bat (also called Brazilian free-tailed bat) is common in California and is abundant in some localities. It is not ranked by the Western Bat Working Group. Many habitats are used, but open habitats such as woodlands, shrublands, and grasslands are preferred. This species

was observed occupying the Hollister Avenue/Cathedral Oaks Road Bridge in west Goleta, approximately 4 miles west of the project site (California Coastal Commission 2009). This species requires caves, mine tunnels, crevices, or buildings for roosting and hibernation, apparently mostly using buildings along the coast. This species may use a separate night roost, particularly if foraging far from the day roost. Maternity colonies of females and young are found in caves, crevices, and buildings. Western free-tailed bat emerges shortly after dusk, and returns to the day roost before sunrise. Individuals travel sometimes 40 miles or more, from roosting sites to foraging areas. Group sizes range from small groups of males to maternity colonies or hibernating groups of thousands. Mating occurs between February and March, and births occur in June and July, peaking in early July (https://www.wildlife.ca.gov/Search-Results.aspx?q=bat). ~~Harris 1988–1990a).~~

Yuma myotis (Myotis yumaensis). Yuma myotis is a common bat species in California. The Western Bat Working Group ranks this species as “low-medium priority” (CDFW 2014). Optimal foraging habitat includes open woodlands with water over which to prey on insects found by echolocation. Yuma myotis roosts under bridges, in crevices in buildings and in caves. Separate night roosts are also used. This species emerges from the roost between sunset and 2.5 hours after sunset. Maternity colonies are established under bridges and other structures. Most births occur between late May and mid-June (Dalquest 1947~~Harris 1988–1990b~~).

Pallid bat (Antrozous pallidus). Pallid bat is a California Species of Special Concern and the Western Bat Working Group ranks this species as “high priority” (CDFW 2014). In California, pallid bat occurs throughout the state in a variety of habitats. The subspecies *A. p. pacificus* occurs along the coast. This species was observed occupying the Hollister Avenue/Cathedral Oaks Road Bridge in west Goleta, approximately 4 miles west of the project site (California Coastal Commission 2009). Pallid bats are primarily a crevice roosting species, and select daytime roosting sites where they can retreat from view. Mating occurs in fall or winter, and births occur in early summer. Common roost sites are rock crevices, old buildings, bridges, caves, mines, and hollow trees. Pallid bats are very sensitive to disturbance at the roost. When disturbed, they generally retreat into crevices, and with repeated disturbance, may abandon the roost. Their response time is slow, however, making them vulnerable to shooting and other forms of vandalism, and their loyalty to a chosen roost (particularly buildings, mines, and bridges) is generally high. In central coastal California, pallid bat colonies are vulnerable to bridge modifications and/or replacements (Pierson and Rainey in Bolster 1998).

Thresholds of Significance

A significant impact on biological resources would be expected to occur if the project resulted in any substantial adverse effect on the resources noted in the checklist located at the beginning of this section. Additionally, per the City’s *Environmental Thresholds & Guidelines Manual,* a project would pose a significant environmental impact(s) on biological resources in any of the following would result from project implementation:

~~a)~~• A conflict with adopted environmental plans and goals of the community where it is located

~~b)~~• Substantial effect on a rare or endangered plant or animal species

~~c)~~• Substantial interference with the movement of any migratory or resident fish or wildlife species

~~d)~~• Substantial diminishment of habitat for fish, wildlife, or plants

Project Specific Impacts

a,b) Based on the preliminary design, the project would temporarily impact approximately 0.3 acre of permeable surfaces; and would permanently remove approximately 0.4 acre within the API. All of the temporary impact area is north of Hollister Avenue. A majority of the permanent impact area is also north of Hollister Avenue, but there are two small strips of permeable (and vegetated) surfaces south of Hollister Avenue at the top of the existing channel (on both sides of San Jose Creek) that are included in the calculation of permanent impact area. ~~(J. Elmensdorp, DHA, pers. comm. with E. Gevirtz November 13, 2013.~~

Construction of the project would remove approximately 0.22 acre of arroyo willow thicket, a sensitive natural community (CDFW 2010). This area also meets the City's definition of wetland. Arroyo willow thickets are a riparian community that provide several important ecosystem functions including provision of feeding, and possibly roosting and nesting habitat for many species of birds, possibly including California Species of Special Concern such as warbling vireo, Wilson's warbler, and yellow warbler, provision of sheltering and feeding habitat for amphibians such as tree frogs, creek bank stabilization, and maintaining cool air and water temperatures in the shade of the canopy which is important for steelhead. The removal of 0.22 acre of arroyo willow thicket is therefore a significant, but mitigable impact. With incorporation of Mitigation Measures Mitigation BIO-2 and BIO-3, the project impact would be less than significant.

Two mature specimen coast live oak trees, two western sycamores, and approximately 35 arroyo willows would be removed. These mature trees provide important habitat functions, providing habitat for insects which are a significant food source for many bird species. The trees also provide habitat for birds such as Nuttall's woodpecker, oak titmouse, bushtit, and many others. Avoidance of the trees is not feasible. ~~according to communications with the project engineer (Craig Drake, DHA, pers. comm. with E. Gevirtz October 16, 2013).~~ While willows grow to maturity in a few years, and western sycamores take ten or more years to reach mature size, live oaks typically take many decades to grow to maturity. Thus, with oak trees in particular, and to lesser degree with sycamores, the impact of their removal is long-term. The impact is significant but mitigable. With

incorporation of Mitigation Measure BIO-1, the project impact would be less than significant.

Three specimen southern California black walnut trees, two non-native oak trees, and one London plane tree would be removed. Because the walnut trees are native but were probably planted as part of an orchard a long time ago, and because the other three trees are not native, they have less significance than the native trees. While they do provide habitat functions such as perching opportunities for birds, and shade for other animals, their overall value is low. This impact would be less than significant.

Animal species that move relatively slowly, such as tree frogs and small burrowing mammals, are likely to be killed during vegetation removal. Impacts to these species would be less than significant because they are generally abundant and well-distributed regionally and because the number of animals that would be killed is likely to be low because the grading footprint is small.

Given that past surveys have been conducted at the site and have not found California red-legged frogs, that the habitat suitability is marginal and that the site is surrounded by urban development, it is unlikely that California red-legged frog would be in the project area during the period of vegetation removal, which is planned to occur in the dry season. The impact is not significant, and would be further reduced by the presence of a biological monitor during vegetation removal as required per Mitigation Measures BIO-4 and BIO-5.

Construction in the stream could result in deposition of sediment and/or petrochemical pollutants in the stream that could be transported downstream in San Jose Creek and in the mouth of the Goleta Slough. This could result in polluting downstream habitat in San Jose Creek and in the mouth of the Goleta Slough, which provides habitat for the federally endangered tidewater goby (*Eucyclogobius newberryi*) and other species. This is a potentially significant but mitigable impact with incorporation of Mitigation Measures BIO-3 and GEO-1.

No federally or state listed threatened, endangered species are likely to occur within the API during construction.

No swallows have been observed nesting under the bridge. However, if swallows establish nests and demolition occurs during the nesting season, the impact would be significant and mitigable. With incorporation of Mitigation Measures Mitigation BIO-7, the project impact would be less than significant.

Yuma myotis (a low-medium priority of the Western Bat Working Group) and western free-tailed bat (a common species) were observed roosting on the bridge. Pallid bat, a California Species of Special Concern, was not observed

using the bridge in October 2014, but future surveys might detect it roosting on the bridge during construction.

The destruction of roosts of any bat species during the period of the year when young are being raised would be a significant, but mitigable impact with incorporation of Mitigation Measures BIO 9-11, which include:

~~1.~~• Timing the destruction of the bridge so that it occurs after the young of the year are able to fly;

~~2.~~• Installing bat exclosures ~~prior to~~before construction and no later than April 15 of the construction year; and

~~3.~~• Constructing bridge design features that would provide roosting habitat. Project engineers have determined that the bridge design could include approximately two to four 0.5-inch-wide, 12-inch-deep recessed "slots" between the bridge abutment cap faces. Each slot could be approximately 58 feet long. Paul Heady of the Central Coast Bat Research Group estimates such a design could accommodate approximately 4,000 bats (Heady and Frick 2014), well in excess of the 90 individuals seen to date under the existing bridge.

Potential habitat restoration activities within the API would include manual removal of invasive species including giant reed and use of hand tools to install new vegetation. Mechanical excavations, grading, etc. would not occur. Habitat restoration would have no significant adverse impacts to biological resources.

c) On October 2013, October 2014, and November 2014 URS biologists conducted wetland delineations and jurisdictional determination for San Jose Creek (Figure 5). In summary, the delineation studies concluded that San Jose Creek does not contain wetland waters, but does contain non-wetland waters of the U.S. subject to the USACE permitting authority under Section 404 of the CWA and that the channel of San Jose Creek and its associated riparian vegetation constitute a streambed subject to the CDFW's authority under Fish and Game Code §§ ~~Sections~~ 1600, *et seq*. ~~of the California Fish and Game Code~~. In total, the proposed construction activities will result in the temporary impact of 0.001 acre (7 linear feet) of waters of the U.S. and the permanent impact of 0.075 acre (195 linear feet) of waters of the U.S. In total, the proposed construction activities will result in the temporary impact of 0.03 acre of CDFW-jurisdictional streambeds and the permanent impact of 0.16 acre of CDFW-jurisdictional streambeds. In total, temporary (beneficial) impacts resulting from potential mitigation activities within the Habitat Restoration Opportunity Zone could result in temporary impacts to 0.03 acre (222 linear feet) and 0.26 acre of CDFW-jurisdictional streambeds. This is a potentially significant, but mitigable impact with incorporation of Mitigation Measures BIO-2 and BIO-3.

d) Work in the stream would be conducted during the dry season, typically between May ~~15~~ and October ~~15~~ (http://www.wrcc.dri.edu/cgi-bin/cliMONtpre.pl?ca7902), when there is no water in the creek in most years. Therefore, steelhead are not expected to be present during construction and therefore would not be impacted. Construction would facilitate steelhead migration, which is expected to be beneficial to the species as it is expected to facilitate movement toward upstream areas of the creek that are suitable for spawning. Short-term impacts such as willow tree removal would remove shade and could therefore increase the temperature of water in the stream within the Project reach. Because it is a short stretch of stream (approximately 125 feet) the impact is not significant. Bridge replacement was reviewed by USACE and the U.S. National Marine Fisheries Service (NMFS) as part of their reviews of the San Jose Creek Capacity Improvement Project (now referred to as the San Jose Creek Capacity Improvement and Fish Passage Project). The USACE determined that the project may affect but would not likely adversely affect Southern steelhead and its designated critical habitat in San Jose Creek. NMFS concluded that the Project is expected to be beneficial to steelhead as its implementation is expected to significantly improve fish passage conditions at this location.

If vegetation removal occurs between May 15 and August 15, active bird nests might be destroyed and eggs or young birds unable to fly might be destroyed. This would be a violation of the Migratory Bird Treaty Act~~ and impermissible under federal law~~. If warbling vireo, Wilson's warbler, yellow warbler, or any other California Species of Special Concern are nesting in the API during the period of vegetation removal, it would be a significant but mitigable impact with implementation of Mitigation Measures BIO-4 and BIO-6.

Common animals such as raccoon use the creek corridor to move through the area. Construction in the creek would be temporary, and common animals such as raccoon often move at night and would likely be able to easily move around obstacles in the creek. Thus, the impact is not considered significant with implementation of Mitigation Measures BIO-3 and BIO-4.

e) The project would modify a small section of San Jose Creek that is designated an Environmentally Sensitive Habitat by the City of Goleta. Policy CE 2.1 designates the creek as Environmentally Sensitive Habitat Area (ESHA); and Policy CE 2.2 generally requires protection of 100 feet on both sides of the creek. Policy CE 2.3(d) permits construction of public road crossings, provided there is no feasible less environmentally damaging alternative. Policy CE 2.5(c) allows projects that reduce flooding as long as there is no feasible alternative. Policy CE 2.5(e) requires allowance for passage of fish and wildlife. Policy CE 2.6 requires removal of barriers that prevent migration of fish. The Project is consistent with these policies because there is no feasible alternative that is less environmentally

damaging, and because it removes barriers to fish migration and allows and improves passage of fish and wildlife.

Policy CE 3.5 prohibits filling of wetlands outside of the Coastal Zone unless mitigation measures will be provided to minimize adverse environmental effects including restoration or enhancement of habitat values. The Project is consistent with this policy due to the mitigation measures that will be implemented.

Policy CE 9.4 requires avoidance of impacts to native trees, but policy CE 9.5 permits removal of native trees where alternatives are not feasible and where mitigation including planting of replacement trees and monitoring for five years is included. The Project is consistent with this policy because of the mitigation measures.

f) The proposed project would not conflict with a Habitat Conservation Plan, Natural Community Conservation Plan, or other approved local, regional, or state habitat conservation plan because none are located within or adjacent to the project. Therefore no project impact would result.

Cumulative Impacts

Although the project would cause impacts to riparian habitat and the plants and animals that live in the habitat, the project's contribution (less than 0.5 acre) to the region's cumulative impacts to these resources is not considerable.

Required Mitigation Measures

BIO-1 Coast live oaks and/or western sycamores should be avoided to the extent practicable. All coast live oaks and western sycamores that cannot be avoided ~~shall~~ must be replaced at a ratio of 10:1 (trees planted to trees removed). The trees ~~shall~~ must be grown from local seed stock in 5-gallon containers and planted north of the Hollister Avenue Bridge at approximately 20-foot spacing or greater. Seed collection and cultivation ~~shall~~ must be initiated before construction starts, or as soon as practicable. These trees ~~shall~~ must be irrigated and weeded for at least three years (up to five years if necessary) and monitored for a total of five years. An annual monitoring report ~~shall~~ must be submitted to the ~~City~~ Planning and Environmental Review Director, or designee, for review and approval.

Plan Requirements and Timing: Specifications for replacement of coast live oaks and western sycamores ~~shall~~ must be included in the Habitat Restoration Plan (see BIO-2).

Monitoring: A biologist selected by the City must ~~shall~~ monitor seed collection, planting, irrigation and monitoring, and submit an annual progress report to the City.

BIO-2 A City-approved biologist ~~shall~~ must prepare and implement a riparian and oak woodland Habitat Restoration Plan. Habitat restoration would be located north of the Hollister Avenue Bridge. The restoration plan ~~shall~~ must include a list of species to be planted, their size and numbers of individuals to be planted (including any trees required in Mitigation BIO-1). The restoration plan ~~shall~~ must include a schedule for implementation and performance standards including 75 percent survival at the end of 2 years and 65 percent at the end of 5 years. The plan ~~shall~~ must be submitted to the ~~City~~ Planning and Environmental Review Director, or designee, for review and approval. After approval, the plan shall be implemented.

Plan Requirements and Timing: ~~Prior to construction~~Before constructing the project, a City-approved biologist ~~shall~~ must prepare the Habitat Restoration Plan for Planning and Environmental Review Director, or designee, for~~City~~ review and approval.

Monitoring: The Planning and Environmental Review Director, or designee, ~~City~~ will review and approve the Habitat Restoration Plan. The Plan ~~shall~~ must include a five-year monitoring component. A City selected biologist ~~shall~~ must monitor restoration and submit an annual progress report to the City.

BIO-3 The removal of arroyo willow thicket (*Salix lasiolepis* Shrubland Alliance) ~~shall~~ must be replaced at a 2:1 ratio~~.~~ (~~T~~the exact acreage ~~shall~~ must be calculated based on final design plans~~.~~). Mitigation ~~shall~~ must include creation or enhancement of riparian habitat, such as through removal of giant reed (*Arundo donax*) currently growing within the northern portion of the API, within the Habitat Restoration Opportunity Zone. All native plants grown for the project ~~shall~~ must be grown from seed or cuttings that are obtained within the Goleta Slough watershed if available.

Plan Requirements and Timing: Specifications to implement BIO-3 ~~shall~~ must be included in the Habitat Restoration Plan (see BIO-2).

Monitoring: A City selected biologist ~~shall~~ must monitor the collection of seed and/or cuttings, and ~~shall~~ monitor the planting and weeding, and direct the timing of irrigation for five years. An annual report ~~shall~~ must be prepared by the biologist and submitted to the Planning and Environmental Review Director, or designee.~~City~~.

BIO-4 Removal of vegetation and initial dewatering of the creek (if necessary) ~~shall~~ must occur in the dry season, typically between May~~ 15~~ and October~~September 15~~.

Plan Requirements and Timing: These limitations ~~shall~~ must be included in construction contract documents and specifications (Planning and Environmental Review Director, or designee~~City staff~~ to verify), with the caveat that BIO-5 ~~shall~~ must be implemented if construction in the creek would occur while water is present.

Monitoring: A City selected biologist ~~shall~~ must monitor removal of vegetation and dewatering of the creek and submit a report to the Planning and Environmental Review Director, or designee, ~~City~~ at the end of the vegetation removal.

BIO-5 If vegetation removal or other elements of project construction will occur while there is water in the creek, pre-construction surveys for California red-legged frog and other sensitive species shall be conducted by an approved biologist. If any red-legged frogs or other federally listed species are found, the project ~~shall~~ must be delayed until the U.S. Fish and Wildlife Service (USFWS) is consulted and a take avoidance strategy is developed. If no red-legged frogs are found, project construction may proceed. A biologist familiar with the species ~~shall~~ must be present during the vegetation removal.

Plan Requirements and Timing: This requirement will be included in construction contract documents and specifications and Planning and Environmental Review Director, or designee, ~~City staff~~ will verify. Requirements ~~shall~~ must be discussed with construction crews ~~prior to~~before construction. Any pre-construction surveys must be reviewed and approved by the Planning and Environmental Review Director, or designee, before ~~the City of Goleta prior to~~ commencement of construction.

Monitoring: A qualified biological monitor ~~shall~~ must be present during vegetation removal and ~~shall~~ prepare daily monitoring logs of all observations. These logs ~~shall~~ must be summarized into a weekly memo style report for submittal to the Planning and Environmental Review Director, or designee~~City~~.

BIO-6 If vegetation removal occurs during the bird breeding season (February 1 through August 31, or as determined by a qualified biologist based on observations in the field), pre-construction nesting bird surveys ~~shall~~ must be conducted by a qualified biologist once per week for three weeks ~~prior to~~ before vegetation removal. The biologist will determine the presence or absence of nesting birds in the area of direct disturbance, and will determine appropriate buffer areas from any nests. Any active nests found ~~shall~~ cannot

be disturbed. A minimum of a 300-foot buffer ~~shall~~ must be applied to all active nests until the young of the year have left the nest. The buffer may be modified in consultation with the USFWS and the City, taking into account the species and the location of the nest relative to the disturbance area. Vegetation removal and construction within the buffers ~~shall~~ must be postponed until the young of the year have left the nest(s).

Plan Requirements and Timing: This requirement will be included in construction contract documents and specifications. Any pre-construction nesting bird surveys must be reviewed and approved by the Planning and Environmental Review Director, or designee, before ~~City of Goleta prior to~~ commencement of construction. Results of the surveys will be discussed with construction personnel ~~prior to~~before construction. Construction personnel must abide by all recommendations in the approved surveys, including any setbacks from active bird nests.

Monitoring: If vegetation is removed between February 1 and August 31, a biologist ~~shall~~ must be on-site throughout the entire period of vegetation removal. The monitor ~~shall~~ must have the authority to stop work if necessary to avoid impacts to nesting birds. Weekly memo-style reports ~~shall~~ must be submitted by the biologist to the Planning and Environmental Review Director, or designee,~~City of Goleta~~ and USFWS recording the activity regarding construction and breeding birds.

BIO-7 No netting ~~shall~~ can be used to exclude swallows from establishing nests under the bridge. A biologist ~~shall~~ must conduct a pre-construction survey under the bridge for swallow nests. If swallow nests are observed, they ~~shall~~ must be removed before they are completed in consultation with the USFWS. No nests that have been completed ~~shall~~ will be removed. If completed nests are present, no construction under the bridge ~~shall~~ can occur until the young of the year have left the nests, as determined by a survey conducted by a biologist.

Plan Requirements and Timing: This requirement will be included in construction contract documents and specifications. Planning and Environmental Review Director, or designee,~~City staff~~ will verify.

Monitoring: Results of the pre-construction survey and any recommendations and/or USFWS requirements will be summarized in a letter report and submitted to the City for approval. A biologist ~~shall~~ must monitor any nest removal. If completed nests are present, a biologist would conduct a survey to determine when the young of the year have left the nest. Results of that survey would be submitted to the Planning and Environmental Review Director, or designee~~City~~. These requirements will be discussed with

construction personnel ~~prior to~~before construction to ensure they understand restrictions.

BIO-8 A ~~qualified~~ City retained biologist ~~shall~~ must conduct a pre-construction day-time and a night time bat survey ~~prior to~~before bridge demolition. If bats are observed roosting under the bridge, no work under the bridge ~~shall~~ can occur when young of the year are being raised (April through August). ~~(~~This is called the "non-volant period."~~)~~

Plan Requirements and Timing: This requirement will be included in construction contract documents and specifications. Planning and Environmental Review Director, or designee, ~~City staff~~ will verify.

Monitoring: Results of the pre-construction survey and any construction restrictions will be summarized in a letter report and submitted to the City for approval. These requirements will be discussed with construction personnel ~~prior to~~before construction to ensure they understand restrictions.

BIO-9 Bats ~~shall~~ must be excluded from the work area under the bridge ~~prior to~~before April 15 of the construction year. Expandable foam, steel wool, or other method ~~shall~~ must be used to fill the cracks under the bridge that would otherwise provide roosting habitat. Bird exclusion netting ~~shall~~ cannot be used.

Plan Requirements and Timing: This requirement will be included in construction contract documents and specifications. Planning and Environmental Review Director, or designee,~~City staff~~ will verify.

Monitoring: A biological monitor ~~shall~~ must inspect the bridge to verify compliance ~~prior to~~before April 15 of the construction year and provide the Planning and Environmental Review Director, or designee, ~~City~~ with a memorandum of compliance.

BIO-10 If a night roost is observed, work under the bridge ~~shall~~ cannot be conducted between evening and sunrise. Bird exclusion netting ~~shall~~ cannot be used. Airspace access to and from the bridge ~~shall~~ must remain (i.e., the project must not impede bat access to the underside of the bridge. Lighting ~~shall~~ cannot be used at night under the bridge. Combustion equipment such as generators, pumps and vehicles ~~shall~~ cannot be parked or operated under or adjacent to the structure at night. Personnel ~~shall~~ cannot be present under the bridge during the evening or at night.

Plan Requirements and Timing: This requirement will be included in construction contract documents and specifications. Planning and Environmental Review Director, or designee,~~City staff~~ will verify.

Monitoring: The City's construction manager or representative ~~shall~~ must monitor in the field for compliance.

BIO-11 Critical features of bat roosting habitat (access, ventilation and protection) ~~shall~~ must be incorporated into the design and construction of the new bridge, consistent with the design guidelines provided in Erickson et al 2002. The bridge design ~~shall~~ must include two to four 0.5-inch-wide, 12-inch-deep recessed “slots” between the bridge abutment cap faces to provide bat roosting habitat. The proposed bat roosting slots would be placed underneath the closure pour.

Plan Requirements and Timing: This requirement will be included in construction contract documents and specifications. Planning and Environmental Review Director, or designee,~~City staff~~ will verify.

Monitoring: ~~the~~ The ~~city's~~ City's construction manager ~~shall~~ must review plans and verify.

Implementation of these measures would minimize impacts of the project on biological resources to less than significant.

Residual Impact

With implementation of these mitigation measures, residual project-specific and cumulative impacts on biological resources would be considered less than significant.

12.5 Cultural Resources

Would the project:	Potentially Significant Impact	Less Than Significant With Mitigation Incorporated	Less Than Significant Impact	No Impact	See Prior Document
a. Cause a substantial adverse change in the significance of a historical resource as defined in §15064.5?			■		
b. Cause a substantial adverse change in the significance of an archaeological resource pursuant to §15064.5?		■			
c. Directly or indirectly destroy a unique paleontological resource or site or unique geologic feature?			■		
d. Disturb any human remains, including those interred outside of formal cemeteries?		■			

Existing Setting

An Archaeological Survey Report (Appendix D) was prepared for the proposed project. (Note: This appendix contains confidential information and is not available for distribution to the general public).

Cultural Resources

A site records search of the APE for the proposed project was conducted by Dr. Brent Leftwich at the Central Coast Information Center (CCIC) of the California Historic Resources Information System (CHRIS)~~,~~ on August 8, 2013. The archaeological and historic site files of the CCIC were consulted, as were the listings of California Historic Landmarks (CHL), the California Environmental Resource Evaluation System (CERES), the California Register of Historic Resources (CRHR), and the National Register of Historic Places (NRHP), as well as historic maps and aerial photographs. The records search was conducted for all land within a 0.5-mile radius of the project APE. A total of 30 archaeological studies have been previously conducted within a 0.5-mile radius of the project APE, 5 of which are in the current APE (see Table 4).

No known archaeological sites exist within the current APE. One archaeological site is listed within 0.5 mile of the project area: CA-SBA-2204H. CA-SBA-2204H is a historic site associated with the Sexton House, a Santa Barbara County Landmark located approximately 0.3 mile from the APE at 5494 Hollister Avenue.

Table 4: Previous Archaeological Studies in the Project APE

Location	Reference	Results
Included project APE.	Chartkoff (1967)	No cultural materials observed in the APE.
Large survey throughout Goleta. Included the current APE.	Wilcoxon, Erlandson, and Stone (1982)	No cultural materials observed in the APE.
Portions of the APE south of Hollister Avenue along San Jose Creek.	SAIC (2009)	Observed non-cultural marine shell along the banks of San Jose Creek south of Hollister Avenue. No cultural materials observed in the APE.
Included most of the project APE.	URS (2009)	No cultural materials observed in the APE.
Portions of the APE north of Hollister Avenue along San Jose Creek.	Maki (2012)	No cultural materials observed in the APE but note noted poor overall visibility.

On August 29, 2013, archaeologist Dr. Brent Leftwich conducted an intensive archaeological survey of the project area. The northern portion of the APE that may be utilized for biological mitigation (habitat restoration) was surveyed by URS Principal Archaeologist Craig Woodman on November 13, 2014. No cultural resources were found in the APE. Results of the studies are described in the project's Archaeological Survey Report (confidential Appendix D). Due to the heavily disturbed and developed nature of the APE, intuitive inspection of exposed soils and structures was utilized, as appropriate. The areas directly beneath and south of the Hollister Avenue Bridge, along the bed and banks of San Jose Creek, have mostly been heavily disturbed with the channelization of San Jose Creek and the development of commercial lots. The only areas of exposed soil exist in small patches used for landscaping just south of Hollister Avenue along the creek banks. SAIC (2009) previously determined that this soil is the result of secondary deposition. Moreover, on March 5, 2009, the State Historic Preservation Office (SHPO) concurred with USACE's finding that construction impacts in the project area south of Hollister Avenue would result in No Historic Properties Affected (Appendix D).

The portion of the APE north of Hollister Avenue is undeveloped and contains dense vegetation in a riparian environment. Despite the vegetation, ground visibility within 100 feet of the bridge was good (approximately 70 percent). Portions of the APE ~~farther north (i.e.,~~ in the habitat restoration area~~)~~ are heavily overgrown and much of it is impassable. This area is located immediately adjacent to a number of residences on the east side of the creek and exhibits evidence of previous disturbance. Ground visibility in the habitat restoration area was generally poor, although the creek banks provided excellent visibility. No cultural resources were noted during the current surveys; all previous surveys have yielded the negative results.

In October of 2013, URS contacted the Native American Heritage Commission (NAHC) requesting a search of the sacred land files for the study area and an updated listing of individuals and organizations to be contacted. A reply containing the names and addresses of local Native American contacts was initially received on October 16, and an updated version on November 4, 2013. The November sacred lands file search indicated no Native American cultural resources are known to be present in the project area (Appendix D).

Based upon the list provided by the NAHC, letters that described the project and requested information regarding concerns over potential impacts to cultural resources were sent to Native American contacts by certified mail on October 18, 2013. On October 25, 2013, URS called all Native American contacts with valid phone numbers on file with the NAHC, with voice mails left if no one answered. No one contacted expressed concerns over the project, with the exception that if prehistoric cultural resources are unexpectedly discovered during construction activities, the Native American community should consulted.

Paleontological Resources

The geology of the proposed project area is generally defined by Quaternary age alluvium, encompassing Holocene flood-plain deposits of silt, sand, and gravel. Paleontological resources, including vertebrate and invertebrate fossils, are generally found in sedimentary rock units, such as Pliocene and Pleistocene strata. In southern California, most vertebrate fossils are found in non-marine sedimentary deposits, and exposures of non-marine fossils often occur along incised river terraces or within continental terraces of late Pleistocene age.

Thresholds of Significance

A significant impact on cultural resources would be expected to occur if the project resulted in any of the impacts noted in the above checklist. Additional thresholds are contained in the City's *Environmental Thresholds & Guidelines Manual*.

The City's adopted thresholds indicate that a project would result in a significant impact on a cultural resource if it results in the physical demolition, destruction, relocation, or alteration of the resource or its immediate surroundings such that the significance of such a resource would be materially impaired.

Project Specific Impacts

a) No historic resources are located within the project APE nor was any evidence of historic resources found in the APE. Therefore, the project would result in less than significant impacts on historical resources.

b) No known archaeological sites exist within the current APE. One archaeological site is recorded within 0.5 mile of the project area (CA-SBA-2204H). As noted above, CA-SBA-2204H is a historic site and archaeological deposit associated with the Sexton House, a Santa Barbara County Landmark. This site is located east of SR 217, approximately 0.3 mile from the APE and would not be impacted by the proposed Project.

No evidence of prehistoric resources was found in the APE. Due to the disturbed nature of the area south of Hollister Avenue, the potentially disturbed area north of Hollister Avenue, overall good visibility, and previous results of Section 106 consultations, the project is not expected to affect archeological resources. Mitigation Measure CUL-1 has been identified as a standard precautionary measure to ensure that any potential impact to currently unknown resources would be less than significant.

c) No paleontological resources are expected within the proposed project area. The geology of the proposed project area is generally defined by recent (Quaternary age) alluvium encompassing Holocene flood-plain deposits of silt, sand, and gravel. Paleontological resources, including vertebrate and invertebrate fossils, are generally not found in such contexts. Therefore, project impacts would be less than significant.

d) The vast majority of the project area has been previously disturbed by the construction of Hollister Avenue, the associated bridge, and the concrete channelization of San Jose Creek. The discovery of human remains would be highly unlikely. However, if human remains are discovered, ~~State~~ Health and Safety Code ~~Section~~ § 7050.5 ~~states~~ requires that disturbances and activities ~~shall~~ cease in and nearby any area suspected to overlie remains and the County Coroner contacted. Pursuant to Public Resources Code ~~Section~~ § 5097.98, if the remains are thought to be Native American, then the coroner will notify the NAHC, ~~who~~ which will then notify the Most Likely Descendent. At such ~~a~~ time, the City of Goleta would work with the Most Likely Descendent on the respectful treatment and disposition of the remains.

Required Mitigation Measures

CUL-1 Should ~~In the event that~~ previously unknown archaeological resources or human remains ~~are~~ be encountered during grading, work ~~shall~~ must be stopped immediately or redirected until the City-approved archaeologist and local Chumash observer can evaluate the significance of the find pursuant to Phase 2 investigation standards set forth in the City Archaeological Guidelines. The Phase 2 ~~shall~~ must be funded by the City. If resources are found to be significant, they ~~shall be~~are subject to a Phase 3 mitigation program consistent with City Archaeological Guidelines. The Phase 3 ~~shall~~ must be funded by the City.

Plan Requirements and Timing: This requirement ~~shall~~ must be included in construction contract documents and specifications.

Monitoring: ~~City staff shall~~ The Planning and Environmental Review Director, or designee, must conduct periodic field inspections to verify compliance during ground disturbing activities and shall ensure preparation of any necessary Phase 2 and/or Phase 3.

Residual Impact

With implementation of these mitigation measures, residual project specific impacts on cultural resources would be less than significant.

12.6 Geology and Soils

Would the project:	Potentially Significant Impact	Less Than Significant With Mitigation Incorporated	Less Than Significant Impact	No Impact	See Prior Document
~~1)~~a) Expose people or structures to potential substantial adverse effects, including the risk of loss, injury, or death involving:					
i. Rupture of a known earthquake fault, as delineated on the most recent Alquist-Priolo Earthquake Fault Zoning Map issued by the State Geologist for the area or based on other substantial evidence of a known fault? Refer to Division of Mines and Geology Special Publication 42.			■		
ii. Strong seismic ground shaking?			■		
iii. Seismic-related ground failure, including liquefaction?			■		
iv. Landslides?			■		
b. Result in substantial soil erosion or the loss of topsoil?		■			
c. Be located on a geologic unit or soil that is unstable, or that would become unstable as a result of the project, and potentially result in on or off-site landslide, lateral spreading, subsidence, liquefaction, or collapse?			■		
d. Be located on expansive soil, as defined in Table 18-1-B of the Uniform Building Code (1994), creating substantial risks to life or property?			■		
e. Have soils incapable of adequately supporting the use of septic tanks or alternative waste water disposal systems where sewers are not available for the disposal of waste water?				■	

Existing Setting

A preliminary foundation report ~~has been~~was prepared for the project (Fugro 2013). The report was based on review of a wide variety of subsurface geotechnical studies

conducted at the bridge location and nearby portions of San Jose Creek. The following is based on the preliminary foundation report.

The project area is located within the broad, flat alluvial plain of the Goleta Valley. This alluvial plain generally slopes from all directions into Goleta Slough, which is located to the southwest of the project area. San Jose Creek flows southwest to the Pacific Ocean, with the elevation of the proposed project area at approximately 35 feet above mean sea level. The site is near elevation 42 feet and approximately 1.5 miles upstream of the coast. The California Geologic Survey (2009) Tsunami Inundation Map for Goleta shows the inundation area limited to low-lying areas along Goleta Slough and below about 12 feet in elevation. Therefore, tsunami hazards are not a consideration for this Project. The site is not located downstream of a large reservoir or dam that would present a significant inundation hazard to the site. The potential flooding to impact the bridge will be considered in the bridge design and in accordance with design standards established by Caltrans and the American Association of State Highway and Transportation Officials (AASHTO) (Fugro, 2013).

The subsurface conditions encountered generally consist of thin to about 4-foot-thick strata of interbedded sand and clay. Groundwater was encountered at a depth of approximately 14 feet below the ground surface, near the invert of San Jose Creek. Sandy strata were identified as potentially liquefiable, particularly within about the upper approximately 20 to 30 feet of the site. Preliminary review of the data and previous analyses (that will be updated for this project) suggest that the estimated settlement associated with liquefaction of the sandy strata could be approximately 2 to 4 inches at the bridge. The strata encountered below about 30 feet are generally dense or stiff and expected to have less settlement than previously estimated considering thin layer corrections and discontinuous strata. The estimated additional seismic settlement that could occur below 30 feet would likely be 0.5 to 1 inch. Liquefaction could also influence the stability of the channel at the abutments. Lateral loads associated within instability or lateral spreading at the abutments will likely need to be considered in the foundation design (Fugro 2013).

The site is not within a state designated Alquist-Priolo Earthquake Fault Zone or proximal to mapped faults that would present a fault rupture hazard to the bridge site or require special studies to address faulting. The site is proximal to a number of faults considered to be seismic sources within the Caltrans fault database. The most significant faults to the site are a series of thrusts that lie between the Channel Islands and the coast of the Santa Barbara-Goleta area, such as the Red Mountain, Pitas Point, and North Channel Slope, which are mapped within about 3 miles of the Project site. Additionally, the More Ranch and San Jose faults are mapped trending east-west and onshore about 1 mile south and 2 miles from the site, respectively.

Thresholds of Significance

A significant impact on geology/soils would be expected to occur if the project resulted in any substantial adverse effect noted in the above checklist. The City's *Environmental Thresholds & Guidelines Manual* assumes that a project would result in a potentially significant impact on geological processes if the project, and/or implementation of required mitigation measures, could result in increased erosion, landslides, soil creep, mudslides, and/or unstable slopes. In addition, impacts are considered significant if the Project would expose people and/or structures to major geological hazards such as earthquakes, seismic related ground failure, or expansive soils capable of creating a significant risk to life and property.

Project Specific Impacts

a,c,d) There are no Alquist-Priolo mapped earthquake faults or zones within the City of Goleta (General Plan/Coastal Land Use Plan Safety Element, page 5-3 2006a). The proposed new bridge will be designed to meet current seismic standard; as such the project will not create a significant hazard to public health. The Project will also be designed as per Caltrans/AASHTO standards that would avoid potential adverse effects of liquefaction, subsidence, and expansive soils. Therefore, potential impacts related to geology and soils are considered to be less than significant.

b) The proposed project includes replacing the existing bridge and widening the San Jose Creek channel immediately downstream of the new bridge so that the channel conveys 100-year flood flows and conforms to the San Jose Creek Capacity Improvement and Fish Passage Project that was recently completed. Project construction activities including grading could result in soil erosion or loss of top soil. Therefore, Mitigation Measure GEO-1 requiring a grading and erosion control plan has been required to reduce Project impact to a less than significant level.

e) A septic tank or alternative wastewater disposal system is not needed or proposed as part of the project. Therefore, no Project impact would result.

Cumulative Impacts

The proposed project would replace an existing bridge with associated improvements and would not add a new use to the area that would individually or cumulatively result in a significant adverse impact to geology and soils. In addition, Mitigation Measure GEO-1 requiring a grading and erosion plan has been incorporated to reduce any short-term temporary impacts associated with project construction activities.

Required Mitigation Measures

GEO-1 The final grading and erosion control plan ~~shall~~ must be designed to minimize erosion.

Plan Requirements: The plan ~~shall~~ must include, ~~but not be limited to~~without limitation, the following:

- a. Best Management Practices (BMPs), such as temporary berms and sedimentation traps (such as silt fencing, straw bales, and sand bags), ~~shall~~ must be installed in association with project grading. The BMPs ~~shall~~ must be placed at the base of all cut/fill slopes and soil stockpile areas where potential erosion may occur and ~~shall~~ be maintained to ensure effectiveness. The sedimentation basins and traps ~~shall~~ must be cleaned periodically and the silt ~~shall~~ must be removed and ~~disposed of~~deposited in a location approved by the ~~City~~Public Works Director, or designee.
- b. Non-paved areas ~~shall~~ must be revegetated or restored (~~i.e.~~e.g., geotextile binding fabrics) immediately after grading and installation of utilities, to minimize erosion and to reestablish soil structure and fertility. Revegetation ~~shall~~ must include drought-resistant, fast-growing vegetation that would quickly stabilize exposed ground surfaces. Alternative materials rather than reseeding (e.g., gravel) may be used, subject to review and approval by the Planning and Environmental Services Director, or designee, and Public Works Director, or designee.
- c. Runoff ~~shall~~ cannot be directed across exposed slopes. All surface runoff ~~shall~~ must be conveyed in accordance with the approved drainage plans.
- d. Energy dissipaters or similar devices ~~shall~~ must be installed at the end of drainpipe outlets to minimize erosion during storm events.
- e. Grading ~~shall~~ must occur during the dry season (typically May ~~April 15~~ to October~~November 1~~) unless ~~a City-approved~~an erosion control plan approved by the Public Works Director, or designee, is in place and all erosion control measures are in effect. Erosion control measures ~~shall~~ must be identified on an erosion control plan and ~~shall~~ prevent runoff, erosion, siltation, and tracking of mud and soil onto City streets. All exposed graded surfaces ~~shall~~ must be reseeded with ground cover vegetation to minimize erosion. Graded surfaces ~~shall~~ must be reseeded within four weeks of grading completion, with the exception of surfaces graded for the placement of structures. These surfaces ~~shall~~ must be reseeded if construction of structures does not commence within four weeks of grading completion.
- f. Site grading ~~shall~~ must be accomplished to ensure ~~completed such that~~ water ~~permanent~~ drainage is angled away from foundations and slabs ~~is~~

~~provided~~ and so that water ~~shall~~ does not pond near proposed structures or pavements.

Timing: Final grading, drainage, and erosion control plans ~~shall~~ must be reviewed and approved by the ~~City~~ Public Works Director, or designee, and included in construction contract documents and specifications. BMPs and erosion control measures ~~shall~~ must remain in place/~~shall~~ be implemented for the duration of grading and construction.

Monitoring: ~~City staff~~The Public Works Director, or designee, must ensure ~~or its contractor shall verify~~ compliance during grading and construction activities.

Residual Impact

With implementation of the mitigation measure noted above, residual Project specific and cumulative impacts on geology and soils ~~would be~~are considered less than significant.

12.7 Greenhouse Gas Emissions

Would the project:	Potentially Significant Impact	Less Than Significant With Mitigation Incorporated	Less Than Significant Impact	No Impact	See Prior Document
a. Generate greenhouse gas emissions, either directly or indirectly, that may have a significant impact on the environment?			■		
b. Conflict with an applicable plan, policy or regulation adopted for the purpose of reducing the emissions of greenhouse gases?			■		

Existing Setting

Global climate change involves alterations to long-term average weather trends~~ (i.e., climate)~~, ~~which~~ that can be measured by changes in temperature, wind patterns, and precipitation (U.S. Climate Change Science Program 2009). Certain gases in the earth's atmosphere, classified as greenhouse gases (GHGs), play a critical role in determining the Earth's surface temperature. Solar radiation enters the Earth's atmosphere and a portion of the radiation is absorbed by the Earth's surface. This absorbed radiation is then emitted from the Earth as low-frequency infrared radiation;~~,~~ ~~which~~ is absorbed and re-emitted by GHGs; and then ~~, which~~ absorbed and emitted radiation in the infrared spectrum. As a result, infrared radiation that otherwise would have escaped back into space is trapped, resulting in a warming of the atmosphere. This phenomenon, known as the greenhouse effect, is responsible for maintaining a habitable climate on Earth. ~~; however, s~~The vast majority of scientific consensus agrees that ~~has identified~~ human-related emission of GHGs above naturally occurring levels ~~as~~ is a significant contributor to global climate change (U.S. Climate Change Science Program 2009). GHGs include water vapor, carbon dioxide (CO2), methane (CH4), nitrous oxide (N2O), ground-level O3, and fluorinated gases such as chlorofluorocarbons and hydrochlorofluorocarbons (USEPA 2013).

In *Massachusetts v. Environmental Protection Agency* (2007) 549 U.S. 497, the United States Supreme Court ~~ruled~~ determined that the USEPA has the authority to regulate GHGs as pollutants under the Clean Air Act (42 U.S. Code [USC] § 7401, *et seq*.) (Center for Climate and Energy Solutions 2013).~~ However, u~~Unlike criteria pollutants and toxic air contaminants (TACs) (~~,~~ which are pollutants of regional and local concern), however, GHGs are pollutants of global concern. ~~Whereas~~ While criteria pollutants and TACs with localized air quality effects have relatively short atmospheric lifetimes, GHGs have long atmospheric lifetimes. GHGs persist in the atmosphere for long enough time

periods to be dispersed around the world. Although the exact lifetime of any particular GHG molecule is dependent on multiple variables, it is understood that currently more CO2 is emitted into the atmosphere than is sequestered by ocean uptake, vegetation, and other forms of sequestration (Seinfeld and Pandis 1998).

Emissions of GHGs contributing to global climate change are attributable in large part to human activities associated with the transportation, industrial/manufacturing, electric utility, residential, commercial, and agricultural sectors (CARB 2009). In California, the transportation sector is the largest emitter of GHGs, followed by electricity generation (CARB 2009). California experienced a statewide GHG reduction from 464 million metric tons (MMT) of CO2 equivalent (CO2e) in 2000 to 457 MMT of CO2e in 2009, resulting in a decrease of 1.5 percent between 2000 and 2009. The 2009 levels are the lowest in the ten-year period while the highest level of 489 MMT of CO2e was experienced in 2007. Since 1990 GHG emissions have increased approximately 5.5 percent through 2009. A 5.8 percent decrease in emissions from 2008 through 2009 did occur. This, however, is ~~occurred but has been~~ attributed to the slower economy. This decreasing trend is also reflected in the national emissions decrease of 6.1 percent for the same period (CARB 2011). For comparison, the national total GHG emissions in 2009 were 6,633 MMT of CO2e (USEPA 2011), of which California's emissions represent 6.9 percent.

Modeling

The project area is within the jurisdiction of SBCAPCD. Construction is estimated to start in 2016 and would take approximately 24 months to complete. URS quantified criteria pollutant emissions resulting from the construction of the Project using construction data provided by the Project engineer. Emission factors and other data are from the CalEEMod California Emissions Estimator Model™ version 2013.2.2 (successor to planning level emissions estimating software, URBEMIS). This software was used as the criteria pollutant quantification tool for this project. The Project engineer estimated the project construction activities would occur over a 24-month period. A copy of the GHG Technical Memo with modeling results is provided as Appendix E.

Thresholds of Significance

~~As directed by SB 97 and noted above, the California Natural Resources Agency adopted amendments to the CEQA Guidelines that became effective on March 18, 2010. These new~~ The CEQA Guidelines provide regulatory guidance on the analysis and mitigation of GHG emissions in CEQA documents. According to ~~the amendments made to~~ Appendix G of the CEQA Guidelines, the project would have a significant impact if it would:

- Generate greenhouse gas emissions, either directly or indirectly, that may have a significant impact on the environment.

- Conflict with an applicable plan, policy, or regulation adopted for the purpose of reducing the emissions of greenhouse gases.

The ~~adopted~~ CEQA ~~amendments~~ Guidelines require a Lead Agency to make a good-faith effort based, to the extent possible, on scientific and factual data in order to describe, calculate, or estimate the amount of greenhouse gas emissions resulting from a project. They give discretion to the Lead Agency whether to:

- Use a model or methodology to quantify greenhouse gas emissions resulting from a project, and which model or methodology to use; and/or

- Rely on a qualitative analysis or performance-based standards.

In addition, a Lead Agency should consider the following factors, among others, when assessing the significance of impacts from greenhouse gas emissions on the environment:

- The extent to which the project may increase or reduce greenhouse gas emissions as compared to the existing environmental setting;

- Whether the project emissions exceed a threshold of significance that the Lead Agency determines applies to the project; and

- The extent to which the project complies with regulations or requirements adopted to implement a statewide, regional, or local plan for the reduction or mitigation of greenhouse gas emissions.

The amendments call on Lead Agencies to establish significance thresholds for their respective jurisdictions.

Currently, neither the State of California nor the City of Goleta ~~has~~ have established CEQA significance thresholds for GHG emissions. Indeed, many regulatory agencies are sorting through suggested thresholds and/or making project-by-project analyses. This approach is consistent with that suggested by CAPCOA in its technical advisory entitled "CEQA and Climate Change: Addressing Climate Change through the California Environmental Quality Act Review (California Air Pollution Control Officers Association [CAPCOA] 2008):

> "~~…~~In the absence of regulatory standards for GHG emissions or other specific data to clearly define what constitutes a 'significant project', individual lead agencies may undertake a project- by-project analysis, consistent with available guidance and current CEQA practice."

While numerous threshold options have been discussed in various publications, at this time, neither the State of California, nor the Santa Barbara County APCD, nor the City

of Goleta have established or adopted CEQA significance thresholds/screening tables for GHG emissions. The County of Santa Barbara Planning and Development Department (P&D) uses 10,000 MT CO2e/year as a screening tool for projects to initiate review on a case by case basis.

In June 2010, the Bay Area Air Quality Management District (BAAQMD) became the first regulatory agency in the nation to approve guidelines that establish thresholds of significance for GHG emissions (BAAQMD 2010). See Table 5.

Table 5: Bay Area Air Quality Management District Guidelines for GHG Emissions

GHG Emission Source Category	Operational Emissions
Other than Stationary Sources	1,100 MT CO_2e/yr OR 4.6 MT CO_2e/yr/SP*/yr (residents + employees)
Stationary Sources	10,100 MT CO_2e/yr
Plans	6.6 MT CO_2e/yr/SP*/yr (residents + employees)

* Note: SP* - Service Population

The BAAQMD threshold is a promulgated CEQA threshold that has undergone full public review and comment, with approval by the BAAQMD governing board, and technical support by BAAQMD staff. It applies to a nine-county portion of northern California that includes very diverse populations and land uses. BAAQMD's adoption of GHG thresholds is subject to ongoing litigation.[1]

According to the methodology used to establish the BAAQMD GHG threshold, the threshold of 1,100 MT CO_2e/yr is a numeric emissions level below which a project's contribution to global climate change would be less than "cumulatively considerable." This emissions rate is equivalent to a project size of approximately 60 single-family dwelling units. Of all the projects to be expected to be built out in the San Francisco Bay Area Air Basin by 2020, approximately 59 percent of these projects would exceed this threshold; this fraction of projects would account for 92 percent of all emissions expected at buildout in 2020. For projects that are above this "bright-line cutoff level" of 1,100 MT CO_2e/yr, emissions from these projects would still be less than cumulatively significant if the project as a whole would result in an efficiency of 4.6 MT CO_2e per service population per year for mixed-use projects (BAAQMD 2010b).

1 In March 2012, an Alameda County Superior Court (*California Building Industry Assoc. v. Bay Area Air Quality Management District* (March 5, 2012) Alameda Super. Ct. Case No. RG10-548693) ruled that BAAQMD needed to comply with CEQA before adopting their 2010 Air Quality CEQA Guidelines, which included significance thresholds for criteria air pollutants and GHGs. On August 13, 2013, the Court of Appeal (*California Building Industry Assoc. v. Bay Area Air Quality Management District* (2013) 218 Cal.App.4th 1171, *rev. granted*) reversed the lower court's decision and upholding the BAAQMD Guidelines. That decision was appealed to the California Supreme Court, which granted review on November 26, 2013. The matter is currently pending before the California Supreme Court.

For purposes of this project, the City determines that BAAQMD's GHG significance threshold has a strong regulatory and technical underpinning. It is based on substantial data and is intended as a regulatory threshold. In addition, the climatic regime in the Goleta-Santa Barbara area that governs energy demand for space heating and cooling is also very comparable to that occurring in the BAAQMD. Further, in June 2010, the Santa Barbara County Planning and Development Department produced a memorandum, "Support for Use of Bay Area Air Quality Management District Greenhouse Gas Emissions Standards," providing evidentiary support for reliance on the proposed BAAQMD standards as interim thresholds of significance in Santa Barbara County (SBCPD 2010). The memorandum notes that certain counties in the Bay Area are similar to Santa Barbara County in terms of population growth, land use patterns, general plan policies, and average commute patterns and times.

Given that the City of Goleta does not have established thresholds of significance for GHG emissions, and as the City is located in Santa Barbara County, the rationale for applicability of the BAAQMD thresholds should generally apply. Therefore, for this project, the City has applied the following two thresholds of significance to the project.[2] A significant impact related to GHGs could occur if the project would:

1. Exceed the daily significance threshold adopted by the BAAQMD, i.e., of 1,100 MT CO_2e/yr, for operational GHG emissions and/or result in significant GHG emissions based on a qualitative analysis.
2. Fail to employ reasonable and feasible means to minimize GHG emissions from a qualitative standpoint, in a manner that is consistent with the goals and objectives of AB 32.

~~Some areas of the BAAQMD jurisdiction resemble land use patterns in the Goleta area. The climatic regime in the Goleta-Santa Barbara area that governs energy demand for space heating and cooling is also very comparable to that occurring in the BAAQMD. Additionally, in June 2010, the Santa Barbara County Planning and Development Department released a memorandum "Support for Use of Bay Area Air Quality Management District Greenhouse Gas Emissions Standards," providing evidentiary support for reliance on the proposed BAAQMD standards as interim thresholds of significance in Santa Barbara County (SBCACPD 2010). The memorandum notes that certain counties in the Bay Area are similar to Santa Barbara County in terms of population growth, land use patterns, GP/CLUP policies, and average commute patterns and times.~~

~~Accordingly, given that the City of Goleta does not have established thresholds of significance for GHG emissions, and as the City is located in Santa Barbara County, the rationale for applicability of the BAAQMD thresholds during operations would generally~~

2 Use of the BAAQMD threshold does not imply that it is a threshold that the City of Goleta has formally adopted, or should adopt, as a GHG significance threshold for all present or future project analyses.

~~apply. Therefore, the City has applied the following two thresholds of significance to the project. Would the project:~~

- ~~Exceed the daily significance threshold adopted by the Bay Area Air Quality Management District, i.e., of 1,100 MT CO2e/yr for operational GHG emissions and/or result in significant GHG emissions based on a qualitative analysis.~~
- ~~Employ reasonable and feasible means to minimize GHG emissions from a qualitative standpoint, in a manner that is consistent with the goals and objectives of AB 32.~~

~~The use of the BAAQMD threshold does not imply that it is a threshold that the City of Goleta has formally adopted, or should adopt, as a GHG significance threshold for all present or future project analyses.~~

Project Specific and Cumulative Impacts

a,b) The project will not induce growth, nor will the project generate new traffic. It will not cause any new significant long-term traffic emissions as part of long-term operations. Project construction activities, especially those associated with heavy equipment operations for grading, would contribute to cumulative GHGs and global climate change. The use of heavy trucks, excavators, graders and smaller equipment, and the transportation of construction workers and materials during the work week to and from the site over 24 months would result in emissions of combustion related pollutants. It is anticipated that project construction generated CO_2E emission levels over 24 months would total 3,230 metric tons. Note that this does not take into account life cycle GHGs involved with manufacture of steel rebar or cement itself. Assuming a project lifetime of 30 years, the amortized annual GHG emissions would be approximately 108 $MTCO_2e$/year, far lower than thresholds. As stated, the rebuilt bridge will not create an increase of traffic of trucks or cars. Project construction activities would result in insignificant contribution to GHGs and global climate change. Therefore, Project impact is less than significant.

Required Mitigation Measures

There are no significant GHG impacts and no mitigation measures are required. The following recommended measures would further minimize less than significant GHG impacts.

Recommended Mitigation Measures

GHG-1 Energy conservation measures ~~shall~~ must be included in any future structures. The following optional energy-conserving techniques could be incorporated if City engineering staff determine they are feasible and practicable:

- ~~Use of~~ Using water-based paint on exterior surfaces
- ~~Installation of~~ Installing cool pavements if they meet the construction criteria
- ~~Provision of~~ Providing segregated waste bins for construction-related recyclable materials
- Zero waste/high recycling standards for construction debris

Plan Requirements and Timing: These requirements ~~shall~~ must be included in construction documents and specifications.

Monitoring: ~~Staff~~ The Public Works Director, or designee, ~~shall~~ must verify compliance during periodic inspections of the work site during construction and during final inspection of the structure.

Residual Impact

With implementation of these mitigation measures, residual impacts as a result of the project's GHG emissions would remain less than significant.

12.8 Hazards and Hazardous Materials

Would the project:	Potentially Significant Impact	Less Than Significant With Mitigation Incorporated	Less Than Significant Impact	No Impact	See Prior Document
a. Create a significant hazard to the public or the environment through the routine transport, use, or disposal of hazardous materials?		■			
b. Create a significant hazard to the public or the environment through reasonably foreseeable upset and accident conditions involving the release of hazardous materials into the environment?		■			
c. Emit hazardous emissions or handle hazardous or acutely hazardous materials, substances, or waste within one-quarter mile of an existing or proposed school?			■		
d. Be located on a site which is included on a list of hazardous materials sites compiled pursuant to Government Code §65962.5 and , as a result, would it create a significant hazard to the public or the environment?		■			
e. For a project located within an airport land use plan or, where such a plan has not been adopted, within two miles of a public airport or public use airport, would the project result in a safety hazard for people residing or working in the project area?			■		
f. For a project within the vicinity of a private airstrip, would the project result in a safety hazard for people residing or working in the project area?				■	
g. Impair implementation of or physically interfere with an adopted emergency response plan or emergency evacuation plan?			■		

Would the project:	Potentially Significant Impact	Less Than Significant With Mitigation Incorporated	Less Than Significant Impact	No Impact	See Prior Document
h. Expose people or structures to a significant risk of loss, injury or death involving wildland fires, including where wildlands are adjacent to urbanized areas or where residences are intermixed with wildlands?			■		

Existing Setting

The project site is not listed as a hazardous materials site pursuant to Government Code ~~Section~~ § 65962.5 (Cortese List) according to the Department of Toxic Substance Control's (DTSC) Envirostor database. However the adjacent property to the east (5551 Hollister Avenue) was identified on several regulatory databases relating to leaking underground storage tanks and some residual subsurface impacts were identified and have the potential to impact the subsurface of the proposed project area.

The site is located within the City's designated Wildland Fire Hazard Area. The closest airport to the site is Santa Barbara Airport located approximately 1.2 miles to the southwest at 500 Fowler Road in Santa Barbara. The Project site is located within the airport influence area but is not in located within an airport hazards area such as the clear zone, approach zone, or airport safety corridor per the General Plan Other Hazards Map.

URS reviewed readily available historical data pertaining to the property and contracted with Environmental Data Resources (EDR) to conduct a search for facilities listed by regulatory agencies as potentially having environmental concerns as part of an Initial Site Assessment (ISA). A brief summary is provided herein and a copy of the ISA is provided as Appendix F.

Based on an ISA Field Inspection on September 19, 2013, storage structures that would contain hazardous materials were not observed on the property. Groundwater monitoring wells were identified on the eastern portion of the property associated with the historical release of fuel from leaking underground storage tanks located on the adjacent property to the east. An area of residual impacted soil was identified at the 5551 Hollister Avenue property within the flood control easement of the San Jose Creek. This area is located to the south of the Hollister Avenue Bridge. Based on analytical results, total petroleum hydrocarbons (TPH) was reported to be up to 330 mg/kg in soil. Approximately 1,500 cubic yards of petroleum-impacted soil was removed from the San Jose Creek located adjacent to the west of the 5551 Hollister Avenue property. No further investigation or remediation is reportedly required in this area. An

Asbestos and Lead-Containing Survey Report was prepared on March 14, 2014. The survey included the Hollister Avenue Bridge and a privately owned steel bridge located adjacent to and south of the Hollister Avenue Bridge The objective of the Survey Report was to assess the potential presence and quantity of asbestos-containing materials (ACM) and LBP at the Site prior to bridge demolition. A total of 18 bulk asbestos samples representing 6 suspect materials were collected during the survey. A total of three bulk samples of suspect LBP were collected during the survey. The survey identified the following hazardous building materials:

- Chrysotile asbestos at concentration of 60-65% was detected in samples representing approximately 4 square feet of non-friable guard rail shims located under rail posts on the Hollister Avenue Bridge walls. Building materials containing at least 1 percent asbestos are considered ACMs and should be managed according to OSHA requirements.
- Approximately 40 square feet of intact gray paint (used for graffiti abatement) applied to the concrete bridge rail walls on the Hollister Avenue Bridge exhibited a total lead concentration of 100 mg/kg and a WET lead concentration of 4.0 mg/l.
- Intact red/yellow paint applied to the steel bridge exhibited a total lead concentration of 200,000 mg/kg
- Intact yellow/red paint applied to the steel bridge floor exhibited a total lead concentration of 110,000 mg/kg.
- A composite analysis of the red/yellow and yellow/red paints on the steel bridge exhibited a TCLP lead concentration of 740 mg/l.

Thresholds of Significance

A significant impact with regard to hazards and hazardous materials would be expected to occur if the project resulted in substantial hazards noted in the above checklist. In addition, the City's *Environmental Thresholds & Guidelines Manual* addresses public safety impacts resulting from involuntary exposure to hazardous materials. These thresholds focus on the activities that include the installation or modification to facilities that handle hazardous materials, transportation of hazardous materials, or non-hazardous land uses in proximity to hazardous facilities. Since the project is not a hazardous materials facility, the City's risk based thresholds are not applicable. However, for the purposes of this analysis, the project would be considered to pose a significant impact if it results in the exposure of people to a variety of hazards or hazardous materials as listed above.

Project Specific Impacts

a-c) The nearest school to the project site is Saint Raphael School located approximately 0.2 mile to the east at 160 St. Joseph's Street. The proposed project would replace an existing bridge and would not emit hazardous emissions

or handle hazardous or acutely hazardous materials, substances, or waste as part of long-term project operations. During operation, limited quantities of hazardous materials would be needed to perform general maintenance activities. These materials would include petroleum-based fluids (fuel oil, equipment oil, lubricants, solvents, etc.), cleaning supplies, paint, compressed gases, and welding equipment. These materials would generally be required and stored in small quantities. Hazardous wastes generated during operation would include used equipment oil, oily rags, and dried paints. Hazardous materials would be used, transported, produced, handled, stored, and disposed of in accordance with applicable local, state, and federal requirements.

Construction of the project would require limited and temporary use of hazardous materials, consisting of paints, solvents, compressed gas (for welding), batteries, diesel or gasoline (used for equipment fuel), and oil. Construction activities would also generate hazardous wastes consisting of: flushing and cleaning fluids, spent batteries, used oil, welding materials, and dried paint.

Demolition of the Hollister Avenue Bridge and the steel bridge to the south could expose construction workers and others to harmful levels of asbestos and lead. See MMs HAZ-1 and HAZ-2.

d) The project site is not listed as a hazardous materials site pursuant to Government Code ~~Section~~ § 65962.5 (Cortese List) according to the DTSC Envirostor database. However, the adjacent property to the east (5551 Hollister Avenue) was identified on several regulatory databases relating to leaking underground storage tanks and some residual subsurface impacts were identified and have the potential to impact the subsurface of the proposed project area. Potential construction related impacts associated with demolition and ground disturbing activities have been identified. Based on the historical impacted soil in the area of the property, there is the potential of encountering impacted soil in the vicinity of the property during demolition and construction activities. Therefore, Mitigation Measure HAZ-3 has been identified and requires preparation of a Soil Management Plan (SMP) to provide guidance for the proper handling, on-site management, and disposal of impacted soil and groundwater that may be encountered during proposed earthwork activities (e.g., excavation and grading).

e) The project site is located within the airport influence area for Santa Barbara Airport but is not in located within the clear zone, approach zone or airport safety corridor. The proposed Project would replace an existing bridge and would not introduce a new use to the area. Therefore, the proposed project would not introduce a new hazard to people working or residing in the project area and project impact would be less than significant.

f) There are no private airstrips in the vicinity of the project site; therefore, there are no safety impacts to a private airstrip or people residing or working in the Project area would result.

g) The proposed project would replace an existing bridge. The project would not result in the construction of any new facilities or establishment of new uses that could impair implementation of or physically interfere with an emergency response or emergency evacuation.

h) The proposed project is not located within the City's designated wildland fire hazard area. The proposed project would replace an existing bridge and would not increase exposure of people or structures to wildland fire hazards. Therefore, wildland fire impacts would be less than significant.

~~With incorporation of~~ Implementing Mitigation Measures HAZ-1, HAZ-2, and HAZ-3 will result in ~~,~~ the project's hazard impacts to the public or the environment ~~would~~ to be less than significant.

Cumulative Impacts

The project's limited and temporary storage of hazardous materials would result in an adverse, but not significant, contribution to cumulative risks associated with hazards and hazardous materials with mitigation incorporated.

Required Mitigation Measures

HAZ-1 ~~Prior to~~ Before demolition work that could disturb identified Asbestos Containing Materials (ACM), an ACM Abatement and Management Plan ~~should~~ must be prepared. Asbestos abatement ~~shall~~ must be conducted during demolition activities, consistent with Federal Occupational Safety and Health Administration (OSHA) and air quality regulations. The Management plan will include:

~~1.~~• Detailed information regarding ACM classification

~~2.~~• ACM hazard assessment (the possibility of fiber release from ACM is based on the materials condition, such as friability)

~~3.~~• ACM inventory information, training and qualification for workers

~~4.~~• Demolition handling procedures, waste management and disposal procedures, and emergency response procedures (in case of a release of friable materials)

A licensed asbestos abatement removal contractor ~~shall~~ must remove the identified ACMs under the oversight of a California Certified Asbestos Consultant. The ACM removal should include notification of demolition activities to the County of Santa Barbara Air Pollution Control District.

Plan Requirements and Timing: An ACM Abatement and Management Plan ~~shall~~ must be prepared ~~prior to~~ before demolition work. This requirement ~~shall~~ must be included in the construction contract documents and specifications.

Monitoring: ~~City~~ The Public Works Director, or designee, ~~staff shall~~ must review and approve the plan ~~prior to~~ before demolition.

HAZ-2 Lead Based Paint (LBP) should be removed ~~prior to~~ before demolition work that could disturb identified LBP. If the LBP remains in good condition and is not disturbed, exposures to lead are expected to be negligible. However, when LBP deteriorates, is disturbed or damaged such as during demolition or renovation operations, lead dust may be released, creating potential health hazards.

The following is recommended:

~~1.~~• The LBP that is in good condition does not need to be abated ~~prior to~~ before renovation/demolition. However, any flaking or peeling LBP should be removed by a licensed lead abatement contractor and disposed of following federal, state, and local regulations. LBP may be disposed of as construction debris as long as it remains on the substrate.

~~2.~~• The renovation/demolition contractor should implement precautions to comply with OSHA regulation 29 CFR § 1926.62, Lead in Construction.

~~3.~~• All painted building materials should be disposed of as construction debris and the renovation/demolition contractor should not be allowed to recycle the painted material in accordance with federal, state, and local regulations for the proper disposal of LBP.

In addition to the above-mentioned recommendations, the following precautions should be taken ~~prior to~~before any repair or maintenance activities that would disturb LBP:

~~1.~~• Do not cut, sand, or drill materials containing LBP.

~~2.~~• ~~Prior to~~Before initiating renovation/demolition activities that would disturb the LBP, wet the area to prevent possible release into the air.

~~3.~~• Remove dust with a high efficiency particulate air (HEPA) vacuum or wet wipe with disposable towels.

~~4.~~• Follow federal, state, and local regulations for proper disposal of LBP.

Plan Requirements and Timing: ~~City staff~~ The Public Works Director, or designee, must ~~shall~~ verify these requirements are included in construction contract documents and specifications.

Monitoring: The construction contractor ~~shall~~ must provide the ~~City~~ Public Works Director, or designee, with a report documenting handling/removal/disposal of LBP.

HAZ-3 Based on the historical impacted soil in the area of the property, there is the potential of encountering impacted soil in the vicinity of the property during demolition and construction of the bridge. A Soil Management Plan (SMP) ~~will~~ must be prepared and implemented for project construction activities. The SMP will provide guidance for the proper handling, on-site management, and disposal of impacted soil and groundwater that may be encountered during proposed earthwork activities (e.g., excavation and grading). The SMP will outline ~~guidelines~~ requirements for the following:

~~5.~~• Contaminated soil and groundwater identification

~~6.~~• Contaminated soil and groundwater assessment

~~7.~~• Construction and maintenance of contaminated soil storage areas

~~8.~~• Dust control

~~9.~~• Soil/groundwater waste segregation criteria

~~10.~~• Waste management procedures

The SMP will include practices that are consistent with Cal-OSHA regulations, as well as the Santa Barbara County Public Health Department, Environmental Health Services Unit (Certified Unified Program Agency – CUPA) land use-specific remediation standards. A hazardous materials consultant or trained professional such as a Professional Geologist or Professional Engineer, with suitable and applicable experience, will be available during earthwork activities to monitor soil and groundwater conditions encountered, in order to evaluate the absence or presence of hazardous substances associated with previous land uses. If impacted soil and/or groundwater are encountered, samples will be collected to identify the extent of contamination. In the event that contaminated soil and/or

groundwater are encountered during construction, the suspect excavated soil will be stockpiled and covered on site. As required, the CUPA will be notified to evaluate whether further assessment is warranted and specify procedures for handling and disposing of contaminated soil. Contaminated soil will be removed by a licensed waste hauler to a landfill permitted to receive this type of waste.

Plan Requirements and Timing: This requirement ~~shall~~ must be included in construction documents and specifications. The SMP ~~shall~~ must be submitted to the ~~City staff~~Public Works Director, or designee, for review and approval prior to ground disturbance.

Monitoring: The construction contractor ~~shall~~ must notify the City's construction manager or representative within 24 hours if impacted soil and/or groundwater are encountered. After removal as per the SMP, the contractor ~~will~~ must provide the ~~City~~ Public Works Director, or designee, with a memorandum for its files documenting the discovery, sampling and disposal of any contaminated soils.

Residual Impact

Residual project-specific impacts on hazards and hazardous materials would be less than significant with mitigation incorporated.

12.9 Hydrology and Water Quality

Would the project:	Potentially Significant Impact	Less Than Significant With Mitigation Incorporated	Less Than Significant Impact	No Impact	See Prior Document
a. Violate any water quality standards or waste discharge requirements?				■	
b. Substantially deplete groundwater supplies or interfere substantially with groundwater recharge such that there would be a net deficit in aquifer volume or a lowering of the local groundwater table level (e.g., the production rate of pre-existing nearby wells would drop to a level which would not support existing land uses or planned uses for which permits have been granted)?				■	
c. Substantially alter the existing drainage pattern of the site or area, including through the alteration of the course of a stream or river, in a manner which would result in substantial erosion or siltation on- or off-site?			■		
d. Substantially alter the existing drainage pattern of the site or area, including through the alteration of the course of a stream or river, or substantially increase the rate or amount of surface runoff in a manner which would result in flooding on- or off-site?			■		
e. Create or contribute runoff water which would exceed the capacity of existing or planned stormwater drainage systems or provide substantial additional sources of polluted runoff?			■		
f. Otherwise substantially degrade water quality?			■		

Would the project:	Potentially Significant Impact	Less Than Significant With Mitigation Incorporated	Less Than Significant Impact	No Impact	See Prior Document
g. Place housing within a 100-year flood hazard area as mapped on a federal Flood Hazard Boundary or Flood Insurance Rate Map or other flood hazard delineation map?				■	
h. Place within a 100-year flood hazard area structures which would impede or redirect flood flows?			■		
i. Expose people or structures to a significant risk of loss, injury, or death involving flooding, including flooding as a result of the failure of a levee or dam?			■		
j. Inundation by seiche, tsunami, or mudflow?			■		

Environmental Setting

Surface Water

The project drains to San Jose Creek, which is located in the South Coast Hydrologic Unit, Goleta Hydrologic Subarea (HU 315.31). Beneficial uses of San Jose Creek include:

- Municipal and domestic supply
- Agricultural supply
- Ground water recharge
- Water contact recreation
- Non-contact water recreation
- Wildlife habitat
- Cold fresh water habitat
- Warm fresh water habitat
- Migration of aquatic organisms
- Spawning, reproduction, and/or early development
- Rare, threatened, or endangered species

- Freshwater replenishment
- Commercial and sport fishing

The Central Coast Regional Water Quality Control Board has identified San Jose Creek as impaired for the following:

- Chloride (source: channelization, industrial point sources, other urban runoff)
- Electrical conductivity (source: channelization, industrial point sources, other urban runoff)
- Enterococcus (source: industrial point sources, natural sources, other urban runoff)
- Escherichia coli (*e. coli*) (source: industrial point sources, natural sources, other urban runoff)
- Fecal coliform (source: industrial point sources, natural sources, other urban runoff)
- pH (source: unknown)
- Sodium (source: channelization, industrial point sources, other urban runoff)

~~The project falls within the Construction Sites and Streets and Highways categories.As such t~~The primary pollutants of concern consist of: salinity, pH, temperature, pesticides, herbicides, PCBs, oil/grease, solvents, lead, copper, zinc, cadmium, plant debris, animal waste, petroleum hydrocarbons, heavy metals, sediments, oxygen demanding substances, and floatables.

Groundwater

The project is located within the Goleta Groundwater Basin (Basin No. 3-16). The basin covers 14.4 square miles (9,210 acres) and is bounded on the west by the topographic divide east of Ellwood Canyon and on the southeast by the Modoc fault. The surface of the basin is drained by the Maria Ygnacio, Atascadero, San Antonio, San Jose, and Carneros creeks. Average precipitation for the basin is about 17 inches.

Flood Hazards

The project includes widening the San Jose Creek channel immediately downstream of the new bridge so that the channel will convey 100-year flood flows. The project is in a known flood hazard area and construction is within the floodway as shown on the Federal Emergency Management Agency (FEMA) Flood Insurance Rate Map panel 06083C1326G. The design of the proposed bridge and channel walls will conform to the approved Conditional Letter of Map Revision (CLOMR) for the San Jose Creek Capacity Improvement Project (now referred to as the San Jose Creek Capacity Improvement and Fish Passage Project).

Thresholds of Significance

A significant impact on hydrology and water quality would be expected to occur if the project resulted in any substantial effects noted in the above checklist. The City's *Environmental Thresholds & Guidelines Manual* similarly assumes that a significant impact on hydrology and water resources would occur if a project would result in a substantial alteration of existing drainage patterns, alter the course of a stream or river, increase the rate of surface runoff to the extent that flooding, including increased erosion or sedimentation, occurs, create or contribute to runoff volumes exceed existing or planned storm water runoff facilities, or substantially degrade water quality.

Project Specific Impacts

a,f) Implementation of the proposed Project would result in disturbance of less than 1 acre. Construction will expose sediments that may erode during storm events causing localized siltation and sedimentation of San Jose Creek. However, this impact would not result in violations of any water quality standards or waste discharge requirements because the Project includes implementing construction and post-construction stormwater BMPs to protect sensitive riparian or wetland resources, reduce or maintain the quantity of runoff, and treat runoff generated by the project to pre-project levels. Because the project is required to comply with applicable federal and state regulations protecting water quality~~ (e.g., Section 401 of the Clean Water Act)~~, exceedances of applicable water quality standards would not be permitted. The project must obtain a ~~401~~ Water Quality Certification from the Regional Water Quality Control Board, which will review and approve BMPs that must be implemented.

Because ~~of~~ the City of Goleta has a ~~'s designation~~ Small Municipal Separate Storm Sewer System (MS4) that requires coverage under the ~~Phase II~~ National Pollutant Discharge Elimination System (NPDES) General Permit for Storm Water Discharges from Small MS4s, Water Quality Order No. 2003-0005-DWQ and CAS000004 (General Permit), ~~regulations~~, all discretionary projects (except those that do not result in a physical change to the environment) within the urbanized area whose contributions are cumulatively considerable must implement one or more BMPs to reduce their contribution to the cumulative impact.

The State Water Resources Control Board (SWRCB) and the Central Coast Water Quality Control Board ~~have recently~~ adopted ~~new~~ regulations for development. Resolution No. R3-2013-0032 was adopted in July 12, ~~of~~ 2013 and ~~specifies~~ adopts the "Post-Construction Stormwater Management Requirements for Development Projects in the Central Coast Region~~the requirements for post-construction stormwater management.~~" (Stormwater Requirements). The Stormwater Requirements regulate the Project ~~will be regulated under this resolution~~ because it is a project that creates and/or replaces at least 2,500

square feet of impervious surface. The Project would not violate any water quality standards or waste discharge requirements. The project site must comply with the following Stormwater Requirements~~requirements are such that the Project site shall~~:

- Limit disturbance of creeks and natural drainage features
- Minimize compaction of highly permeable soils
- Limit clearing and grading of native vegetation at the site to the minimum area needed to build the project, allow access, and provide fire protection
- Minimize impervious surfaces by concentrating improvements on the least-sensitive portions of the site, while leaving the remaining land in a natural undisturbed state
- Minimize stormwater runoff by implementing one or more of the following site design measures:

  ~~1.~~ ▪ Direct roof runoff into cisterns or rain barrels for reuse (N/A)

  ~~2.~~ ▪ Direct roof runoff onto vegetated areas safely away from building foundations and footings, consistent with California building code (N/A)

  ~~3.~~ ▪ Direct runoff from sidewalks, walkways, and/or patios onto vegetated areas safely away from building foundations and footings, consistent with California building code

  ~~4.~~ ▪ Direct runoff from driveways and/or uncovered parking lots onto vegetated areas safely away from building foundations and footings, consistent with California building code

  ~~5.~~ ▪ Construct bike lanes, driveways, uncovered parking lots, sidewalks, walkways, and patios with permeable surfaces

The proposed project's disturbed area is less than 1 acre and is therefore not subject to the SWRCB Construction General Permit (Order No. 2009-0009-DWQ and associated amendments). However, the project ~~shall~~ must implement post construction-related stormwater BMPs that comply with the Stormwater Requirements. ~~in compliance with SWRCB/RWQCB Resolution R3-2013-0032.~~ With implementation of construction and post-construction BMPs, the project would not violate any water quality standards or waste discharge requirements.

b) The proposed project would replace an existing bridge with associated improvements and no groundwater use is proposed. Therefore, the proposed Project would not deplete groundwater supplies. There will be a slight increase in impervious surfaces that would not interfere substantially with groundwater recharge. Project impacts would be less than significant.

c,d) The project would alter the existing drainage pattern of San Jose Creek in a beneficial manner by increasing the flood capacity of the Hollister Avenue Bridge. With proper implementation of construction and post-construction BMPs, this alteration would not result in substantial erosion or siltation on-site or off-site. The Project would not change the course of the drainage. The project purpose is to reduce flooding in the project vicinity by increasing flood conveyance capacity of the existing bridge. The project is required to comply with City of Goleta and FEMA regulations for development within the floodplain and floodway. The design of the bridge and channel walls will conform to the approved CLOMR that included the bridge replacement work and was submitted as part of the San Jose Creek Capacity Improvement Project (now referred to as the San Jose Creek Capacity Improvement and Fish Passage Project). The project would alter the existing drainage pattern; however, based on the project purpose, the Project would not increase the rate or amount of surface runoff in a manner which would result in flooding on- or off-site.

e) The proposed project would not create or contribute runoff water that would exceed the capacity of existing or planned stormwater drainage systems or provide substantial sources of polluted runoff.

g) The project does not include housing and will reduce flooding in the project vicinity. Therefore, no impacts would occur.

h) The project intends to reconstruct a bridge within the existing 100-year floodplain/floodway with the intention of increasing flood capacity. Flows may be redirected with the goal of increasing flood capacity of the existing bridge and channel.

i) The project would not expose people or structures to a significant risk of loss involving flooding, including flooding as a result of a failure of dam or levee. The project purpose is to increase flood capacity of the bridge and channel.

j) The project is not subject to inundation due to seiche or tsunami. Mudflow/debris flow will be incorporated (as necessary) into the proposed bridge design (freeboard).

Cumulative Impacts

The project purpose is to reduce flooding in the project vicinity by increasing flood conveyance capacity of the existing bridge. Therefore, project cumulative impact on hydrology and water quality would be less than significant.

Required Mitigation Measures

No mitigation measures are required or recommended.

Residual Impact

With implementation of the proposed project in compliance with existing regulations residual project specific and cumulative impacts on hydrology and water quality would remain less than significant.

12.10 Land Use and Planning

Would the project:	Potentially Significant Impact	Less Than Significant With Mitigation Incorporated	Less Than Significant Impact	No Impact	See Prior Document
a. Physically divide an established community?				■	
b. Conflict with any applicable land use plan, policy, or regulation of an agency with jurisdiction over the project (including, but not limited to the general plan, specific plan, local coastal program, or zoning ordinance) adopted for purpose of avoiding or mitigating an environmental effect?			■		
c. Conflict with any applicable habitat conservation plan or natural community conservation plan?				■	

Existing Setting

The project site is located inland and is not within the coastal zone. The project site is located within an urban corridor and would replace an existing bridge. The site is primarily surrounded by commercial uses such as car dealerships, small retail uses and vacant land. Within the API for the proposed project, the land has multiple General Plan land use designations including Old Town, Planned, and Recreation. The proposed project is located within the Design Residential (DR) 10 and Retail Commercial (C-2) zoning designations (Goleta 2013).

The purpose of the DR Design Residential Zone is to provide standards for traditional residences as well as allowing flexibility and encouraging innovation and diversity in the design of residential developments by allowing a wide range of densities and housing types while requiring the provisions of a substantial amount of open space within new residential developments. The intent is to ensure comprehensively planned, well designed projects (~~MC~~ Goleta Inland Zoning Code § ~~Sec.~~ 35-222.1). Uses, buildings, and structures incidental, accessory, and subordinate to permitted uses and not involving the maintenance of commercial enterprise on the premises are permitted within this zone (~~MC. Sec.~~ Goleta Inland Zoning Code § 35-222.4).

The intent and purpose of the C-2 Zone is to provide areas for local retail business and commercial needs including stores, shops, and offices supplying commodities or performing services for the residents of the surrounding community (~~MC Sec.~~Goleta

Inland Zoning Code § 35-225.1) Public works or public service structures are a permitted use within this zone (~~MC Sec.~~ Goleta Inland Zoning Code § 35-225.3).

Thresholds of Significance

A significant land use and planning impact would be expected to occur if the project resulted in substantial adverse effects noted in the above checklist.

Project Specific Impacts

~~1.~~a) The proposed project would replace an existing bridge with associated improvements and would not introduce a new use to the area. A privately owned steel bridge located about 100 feet south of the Hollister Avenue Bridge would continue to be utilized for as long as possible to provide vehicular access to the businesses and residences located south of Hollister Avenue and between San Jose Creek and SR 217 southbound on-ramp, but would ultimately be removed as part of the Project. The existing driveway off of Hollister Avenue to these properties would be closed during some stages of construction, and relocated to the west and partially onto the new bridge to fit with the alignment of the new proposed roundabout, part of the Ekwill-Fowler project, that will be located directly east of the bridge. While the privately owned steel bridge would be removed, access would still be maintained with the proposed project. Therefore, the proposed Project would not physically divide an established community.

~~2.~~b) The proposed project would replace an existing bridge with associated improvements and would not introduce a new use to the area. The Project site is not located within the coastal zone and is an allowed use within the DR and C-2 zones. The GP/CLUP Safety Element identifies Hollister Avenue as one of the areas of the City where stream flooding is exacerbated by inadequately sized culverts. The proposed Project would replace the existing Hollister Avenue Bridge with a new bridge that will convey 100-year storm flows and meet current design standards. The proposed Project would be consistent with the City's General Plan/Coastal Land Use Plan Policy SE 6: Flood Hazards Objective: "To minimize damage to structures and the danger to life caused by stream flooding, dam failure inundation, and other flooding hazards." Therefore, the proposed Project would not conflict with applicable land use policies, plans or regulations adopted for the purpose of avoiding or mitigating an environmental effect.

~~3.~~c) No habitat or natural community conservation plans apply to the areas within or adjacent to the project. Therefore, no project impact would result.

Cumulative Impacts

The proposed project would replace an existing bridge and that can only convey 25-year flood flows and is a contributing factor to flooding that occurs in the Goleta Old Town area with a replacement bridge that would convey 100-year storm flows and meet

current design standards. As noted above, the proposed Project would be consistent GP/CLUP Safety Element objective of minimizing flood hazards. The proposed project would not add a new use to the area. Therefore, the proposed project would be consistent with existing land use plans and policies and would not contribute to cumulative land use and planning impacts within the City.

Required Mitigation Measures

No mitigation is either required or recommended.

Residual Impact

No residual project-specific impacts on land use would result.

12.11 Mineral Resources

Would the project:	Potentially Significant Impact	Less Than Significant With Mitigation Incorporated	Less Than Significant Impact	No Impact	See Prior Document
a. Result in the loss of availability of a known mineral resource that would be of value to the region and the residents of the State?				■	
b. Result in the loss of availability of a locally-important mineral resource recovery site delineated on a local general plan, specific plan, or other land use plan?				■	

Existing Setting

No known valuable mineral resources ~~have been~~are identified on the project site, nor does the site contain any known locally important mineral resources. According to the mineral yearbook produced by the California Geological Survey and the USGS (2003), no major nonfuel mineral-producing areas are located in the City.

Thresholds of Significance

A significant impact on mineral resources would be expected to occur if the project resulted in any substantial loss of important mineral resources as noted in the checklist above.

Project Specific Impacts

a-b) There are no known mineral resources of importance to the region or the state on-site and the project site is not designated under the City's General Plan/Coastal Land Use Plan as an important mineral resource recovery site. No impacts are expected.

Cumulative Impacts

The project would have no impact on any cumulative loss of mineral resources or resource recovery sites.

Required Mitigation Measures

No mitigation measures are required or recommended.

Residual Impact

No residual project-specific impacts on materials resources would result.

12.12 Noise

Would the project:	Potentially Significant Impact	Less Than Significant With Mitigation Incorporated	Less Than Significant Impact	No Impact	See Prior Document
a. Expose persons to or generate noise levels in excess of standards established in the local general plan or noise ordinance, or applicable standards of other agencies?		■			
b. Exposure of persons to or generation of excessive groundborne vibration or groundborne noise levels?			■		
c. A substantial permanent increase in ambient noise levels in the project vicinity above levels existing without the project?			■		
d. A substantial temporary or periodic increase in ambient noise levels in the project vicinity above levels existing without the project?		■			
e. For a project located within an airport land use plan or, where such a plan has not been adopted, within two miles of a public airport or public use airport, would the project expose people residing or working in the project area to excessive noise levels?			■		
f. For a project within the vicinity of a private airstrip, would the project expose people residing or working in the project area to excessive noise levels?			■		

Existing Setting

A construction noise impact assessment was prepared for the proposed project and is briefly summarized ~~herein~~below. A complete copy of the technical memorandum is provided in Appendix G. The analysis assumed that noise-producing construction activities would generally be limited to between 8:00 a.m. and 5:00 p.m. Monday through Friday, but it is also recognized that some work outside of these limits may be temporarily required under special conditions (e.g., if extra hours are needed to ensure that work in the creek is completed in the dry season). The analysis assessed potential

noise impacts due to construction activities for the project. Nearby noise sensitive land uses, including single- and multi-family residences and commercial property, were included in this analysis. Please refer to the API Map for viewing the relationship between project elements and nearby sensitive land uses considered in this analysis.

Goleta Municipal Code

Chapter 9.09 of the Goleta Municipal Code (GMC) regulates noise emissions within the City's jurisdiction. While it does not specifically regulate construction noise, it does generally prohibit loud noise during (1) the night and following morning of any Sunday, Monday, Tuesday, Wednesday, or Thursday between the hours of 10:00 p.m. of such day and 7:00 a.m. the following morning; or (2) the morning hours after midnight of any Friday or Saturday, between 12:00 midnight, following such day, and 7:00 a.m. the following morning (GMC § 9.09.020). ~~The City's municipal code does include a section on noise restrictions (Chapter 9.09) which refers primarily to such recreational noise sources as musical instruments, radios, loudspeakers, sound amplifiers, etc. However, this section does not include any specific information, restrictions, or guidance related to construction noise.~~

General Plan Noise Element

The ~~City of~~ Goleta General Plan, Chapter 9.0, Noise Element includes City Policy NE 6.4, which ~~states~~ requires ~~that~~ the City ~~shall~~ to restrict construction hours as a condition of approval for any ~~land use permit or other planning~~ discretionary or ministerial permits. Noise-generating construction activities for projects near or adjacent to residential buildings and neighborhoods or other sensitive receptors ~~shall be~~is limited to Monday through Friday, 8:00 a.m. to 5:00 p.m. Construction generally ~~shall~~ is not ~~be~~ allowed on weekends and state holidays. While the policy does provide for exceptions for emergencies or cases with extenuating circumstances on a case by case basis, no general exception is provided for municipal or roadway construction projects.

Caltrans

Caltrans's Traffic Noise Analysis Protocol states that the noise level from the ~~Contractor's~~ contractor's operations between the hours of 9:00 p.m. and 6:00 a.m. ~~shall~~ cannot exceed 86 dBA at a distance of 50 feet. For the Project, ~~It should be noted that~~ the construction activity would not occur for the hours between 5:00 p.m. and 8:00 a.m. (in accordance with ~~City~~ General Plan Policy NE 6.4). Therefore, the Caltrans guidance would not be applicable to the project.

Federal Transit Administration

The Federal Transit Administration (FTA)-published Transit Noise and Vibration Impact Assessment (FTA Manual) includes transit project construction noise assessment methodology and impact thresholds which may be applicable to this project. There are

two methodologies described in the FTA Manual: Construction Noise General Assessment, which estimates and evaluates construction noise levels based on an assumption of the two loudest pieces of equipment operating simultaneously for one hour, and FTA Detailed Assessment, which predicts and evaluated construction noise levels based upon all identified equipment operating for a percentage of the time based upon an assumed "usage factor."

Given that neither City of Goleta nor Caltrans policies identify noise impact thresholds for daytime construction activity, the FTA construction noise impact criteria were introduced as an appropriate and reasonable substitute to assess potential daytime construction noise impacts and serve as a basis to propose appropriate mitigation.

Thresholds of Significance

A significant noise impact would be expected to occur if the project resulted in any of the impacts noted in the above checklist. Additional thresholds are contained in the City's *Environmental Thresholds & Guidelines Manual*.

With respect to construction noise, there are no separate standards or compatibility measures in the Noise Element. As a general rule, the *Environmental Thresholds and Guidelines Manual* (Chapter 12, Section 3, Part d) suggests that construction activities within 1,600 feet of sensitive receiver locations, such as residences, could result in a significant impact and that construction activities shall be limited to weekdays between 8 a.m. to 5 p.m. only.

There are no City or County thresholds related to groundborne vibration, but other standards can be used to assess these potential effects, as discussed in item b) below.

The FTA-published FTA Manual includes transit project construction noise assessment methodology and impact thresholds which are considered applicable to this project. There are two methodologies described in the FTA Manual: FTA General Assessment and FTA Detailed Assessment. Both are addressed below and are described in more detail in Appendix G.

The impact thresholds for the general assessment are presented in Table 6.

Table 6: General Assessment Noise Thresholds in One-hour Leq (dBA)

Land Use	Day (7:00 a.m. to 10:00 p.m.)	Night (10:00 p.m. to 7:00 a.m.)
Residential	90	80
Commercial	100	100
Industrial	100	100

The impact thresholds for the detailed assessment are presented in Table 7.

Table 7: Detailed Assessment Noise Thresholds

Land Use	8-hour Leq (dBA)		Ldn (dBA)
	Day (7:00 a.m. to 10:00 p.m.)	Night (10:00 p.m. to 7:00 a.m.)	(30-day Average)
Residential	80	70	75[1]
Commercial	85	85	80[2]
Industrial	90	90	85[2]

Notes:
[1] In urban areas with very high ambient noise levels (Ldn>65 dB), Ldn from construction operations should not exceed existing ambient +10 dB.
[2] Twenty-four-hour Leq, not Ldn.

Project Specific Impacts

a,c,d) The proposed project would replace an existing bridge with associated improvements. The project would not create any new travel lanes or increase roadway capacity, so no long-term noise increases are anticipated. However, there is a potential for short-term temporary noise impacts associated with project construction activities and therefore a noise assessment was conducted. In the vicinity of the project's API, three single-family residential units (all in APN 071-090-036) and one multi-family residential unit were identified north of Hollister Avenue and two commercial properties (APN 071-140-046 and APN 071-260-CA1) were identified south of Hollister Avenue. The nearby restaurant (APN 071-140-056) was not considered a noise sensitive receiver because it is not currently in operation. For analysis purposes, the three closest units in each receiver category were used to identify potential noise impacts. Table 8 includes the list of receivers and general distances used for the analysis.

The noise assessment included a General and Detailed assessment of construction noise. Note that the distances used for the General Assessment procedure were based on the center of the project site, at the southern end of the Hollister Avenue Bridge. The distances used for the Detailed Assessment procedure were based on the central location of API, north of Hollister Avenue for single- and multi-family Residential and the central location of the API, south of Hollister Avenue for the commercial property.

The provided list of planned construction equipment over a 24-month schedule was reviewed. Table 8 presents a list of proposed equipment with the average usage hours per day and the number of equipment daily used for this analysis. The equipment quantity presented in Table 9 is the maximum usage between Month 2 and Month 6, representing the worst case noise condition.

Table 8: Noise Sensitive Receivers and Relative Distances

Receivers	Description	Distances used for General Assessment[1]	Distances used for Detailed Assessment[1]
Single-Family Residential	5546 Hollister Avenue. Nearest single-family residential to the project, north of Hollister Avenue (5544 Hollister to be demolished).	340 feet	190 feet
Multi-Family Residential	Dearborn Apartments, 101 Dearborn Place. Nearest multi-family residential to the project north of Hollister.	500 feet	350 feet
Commercial	Mission City Truck Center (used car and truck dealer) 5551 Hollister Avenue and adjacent offices, nearest commercial use, east of the project, south of Hollister Avenue.	125 feet	60 feet

[1] Distance estimated from Project Description, Area of Potential Effect Map.

The two noisiest pieces of construction equipment are the Water Truck and Paving Equipment. The noise level combining these two pieces of equipment would be 92 dBA at 50 feet based on the logarithmic summation. It was assumed that the noise level would attenuate at the rate of 6 dBA per doubling of distance; Table 10 presents the results of the General Assessment.

Because the detailed assessment takes into consideration equipment usage and their location, it was unreasonable to assume that all 20 pieces of equipment identified in Table 9 would be operated at the nearest location relative to the receivers. Construction equipment would be scattered within the API. Therefore, the following assumptions were used as part of the Detailed Assessment:

- Two construction points were established: 1) at the center of API north of Hollister Avenue; and 2) at the center of API south of Hollister Avenue.
- Construction equipment operated at each point represents 1/3 of the equipment listed in Table 1.

As shown in Table 11, no impacts are predicted for any residential receptor locations, assuming that noise-producing construction activities are limited to daytime hours as defined by applicable Caltrans and ~~City of Goleta policy~~Goleta General Plan (generally 8:00 a.m. to 5:00 p.m. on weekdays). However, in order to complete work in the creek during the dry season work window (generally, May ~~April~~ through October), the Contractor may need to work extended hours (e.g., six days a week and ten hours a day). If this is anticipated or required, the Contractor will coordinate with the City and nearby receptors and seek an exemption from to City Policy NE 6.4 to temporarily allow for the extended work periods.

Table 9: Equipment Noise Levels and Usage

Equipment Type[1]	Horsepower	Fuel Type	Average Usage Hours/ Day	Total # of Each Equipment per Day	Reference Lmax at 50 Feet[2]
Grader	175	Diesel	6	1	85
Excavator	175	Diesel	4	1	85
Drill rigs	175	Diesel	8	2	84
Crane	500	Diesel	6	1	85
Concrete pump truck	250	Gas	8	1	82
Pumps	175	Gas	8	2	77
Forklifts	175	Diesel	6	2	85
Tractors/loaders/ backhoes	175	Diesel	8	2	85
Water truck	250	Diesel	4	1	88
Air compressor	175	Gas	8	2	80
Paving equipment	175	Diesel	6	1	89
Off highway trucks	250	Diesel	6	2	84
Other general industrial equipment	175	Gas	8	2	80
Total	–	–	–	20	96

Notes:
[1] Equipment list from Hollister Avenue Bridge Replacement Project, Project Description.
[2] Reference source levels from FTA Transit Noise and Vibration Impact Assessment, FHWA Roadway Construction Noise Model Users Guide, Caltrans Technical Noise Supplement.

Table 10: General Assessment Results (One-hour Leq, dBa)

Receivers	Construction Noise Level at Receiver (dBA)	Impact Threshold Noise Level (dBA)	Predicted Impact
Single-family residential	75	90	None
Multi-family residential	72	90	None
Commercial	84	100	None

Table 11 presents the results of Detailed Assessment.

Table 11: Detailed Assessment Results (Daytime 8-hour Lleq, dBA)

Receivers	Construction Noise Level at Receiver (dBA)	Impact Threshold Noise Level (dBA)	Predicted Impact
Nearest single-family residential	79	80	None
Nearest multi-family residential	74	80	None
Nearest commercial	89	85	Impact

A potential temporary construction noise impact is identified at the closest commercial receptors, specifically the Mission Truck Center and adjacent office condos located south of Hollister Avenue and immediately to the east of the project API. Impacts at this area may be difficult to reduce below impact thresholds without use of temporary noise barriers due to the proximity of the receptor to the construction activity and requirements to maintain staff and customer access to the property during construction. Temporary portable barriers or acoustical curtain systems between the construction activity and sensitive receptors may be used for certain construction activities, thereby reducing noise levels to below impact threshold (generally, 85 dBA, 8-hour Leq). Plans to provide such noise mitigation elements should be coordinated with the property owners or tenants to ensure that such mitigation elements do not result in negative impacts to business operation (including business access or ability of potential customers to see the business.

With incorporation of Mitigation Measures NO-1 and 2, temporary short-term construction noise impacts would be reduced to less than significant levels.

b) Construction projects sometimes employ construction equipment and processes that can produce high ground vibration levels (such as blasting and pile driving) that can be annoying to neighbors or even damaging to nearby structures. However, none of the anticipated construction equipment or processes listed in Table 8 is representative of the types of equipment that produce particularly high vibration levels. Of the listed equipment the types that would likely produce the highest ground vibration levels (grader/excavator/dozer), these would probably not produce a perceptible level of ground vibration (generally, about 65 VdB) beyond about 150 feet from the equipment or an annoying level (about 72 VdB) beyond about 75 feet. Since the nearest vibration-sensitive structures are at least 190 feet away, no significant vibration impacts are anticipated.

e,f) The project will not result in an increase of people and thus would not result in an exposure of people to excessive noises within or near a public airport or private airstrip.

Cumulative Impacts

The project does not involve incremental increases in permanent ambient noise levels; therefore, no cumulative noise impacts would occur.

Required Mitigation Measures

NO-1 The contractor ~~shall~~ must provide temporary portable barriers or acoustical curtain systems between the construction activity and sensitive receptors during construction activities. Plans to provide such noise mitigation elements ~~will~~ must be coordinated with the ~~City~~ Public Works Director, or designee, and the property owners or tenants to ensure that such mitigation elements do not result in negative impacts to business operation (including business access or ability of potential customers to see the business.

Plan Requirements and Timing: These requirements ~~shall~~ must be included in construction contract documents and specifications.

Monitoring: ~~City~~ The Public Works Director, or designee, must ~~staff shall~~ spot check to verify compliance and/or respond to complaints.

NO-2 In addition to any temporary noise barrier system, the contractor must adhere to the following Caltrans Standard Specifications for general noise reduction strategies ~~shall be followed~~:

~~1.~~• Use modern construction equipment

~~2.~~• All powered construction equipment should have adequate mufflers and be well maintained

~~3.~~• Plan noisiest operations for times of least intrusion

~~4.~~• Use quieter alternate methods or equipment when possible

~~5.~~• Locate stationary noise sources away from sensitive receiver locations

~~6.~~• Operate equipment at minimum power as feasible

Plan Requirements and Timing: These requirements ~~shall~~ must be included in construction contract documents and specifications.

Monitoring: ~~City staff shall~~The Public Works Director, or designee, must periodically inspect the site to ensure compliance.

Residual Impact

With implementation of these mitigation measures, residual project-specific and cumulative noise impacts would be less than significant.

12.13 Population and Housing

Would the project:	Potentially Significant Impact	Less Than Significant With Mitigation Incorporated	Less Than Significant Impact	No Impact	See Prior Document
a. Induce substantial population growth in an area, either directly (for example, by proposing new homes and businesses) or indirectly (for example, through extension of roads or other infrastructure)?			■		
b. Displace substantial numbers of existing housing, necessitating the construction of replacement housing elsewhere?				■	
c. Displace substantial numbers of people, necessitating the construction of replacement housing elsewhere?				■	

Existing Setting

The project site includes the existing bridge spanning San Jose Creek. There are no housing units located on-site.

Thresholds of Significance

A significant impact on population and housing would be expected to occur if the project resulted in any of the impacts noted in the above checklist.

Project Specific Impacts

a) The proposed project would replace an existing bridge with associated improvements and would not add any new residential units or permanent employment opportunities. The overall width and configuration of the proposed bridge is controlled by the layout of the roundabout located at the SR 217 Southbound on- and off-ramps/Hollister Avenue intersection proposed as part of the Ekwill-Fowler Road improvements project. The centerline of the new bridge alignment is oblique and slightly upstream compared to the centerline of the existing bridge. This project consists of widening the San Jose Creek channel immediately downstream of the new bridge so that the channel conveys 100-year flood flows and conforms to the newly widened channel constructed as part of the San Jose Creek Capacity Improvement and Fish Passage Project. The

existing concrete lined trapezoidal shaped channel will be replaced with a wider channel with vertical walls. Replacement of the bridge and associated improvements are infrastructure improvements that would not substantially induce population growth into the area and project impact would be less than significant.

b,c) The project would not displace any existing housing units or require the displacement of any people thereby necessitating the construction of replacement housing. Therefore, no project impact would result.

Cumulative Impacts

The proposed project would replace an existing bridge with associated improvements and would not introduce a new use to the area that could contribute to population growth or increased housing demand. The project's contribution to cumulative population growth as well as adverse impacts on the area's housing supply would be non-existent and no project impact would result.

Required Mitigation Measures

No mitigation measures are required or recommended for population and housing.

Residual Impact

No residual project-specific impacts on population and housing would result.

12.14 Public Services

Would the project:	Potentially Significant Impact	Less Than Significant With Mitigation Incorporated	Less Than Significant Impact	No Impact	See Prior Document
Result in substantial adverse physical impacts associated with the provision of new or physically altered governmental facilities, need for new or physically altered governmental facilities, the construction of which could cause significant environmental impacts, in order to maintain acceptable service ratios, response times or other performance objectives for any of these public services:					
a. fire protection?			■		
b. police protection?			■		
c. schools?			~~■~~	■	
d. parks?			~~■~~	■	
e. other public facilities?			~~■~~	■	

Existing Setting

Fire Protection

Goleta receives fire protection and related services from the Santa Barbara County Fire ~~Department~~Protection District, a regional agency providing service to unincorporated and incorporated territory in Santa Barbara County (the "Fire Department"). The Fire Department was formed in 1957 and is governed by the Fire Protection District Law of 1987 (Health and Safety Code §§ 13800, *et seq*.). The nearest fire station to the project site is Station 12 located approximately 0.7 mile to the northeast at 5330 Calle Real, Goleta, California.

Police Protection

Police services are provided to ~~the~~ Goleta through a contract with the Santa Barbara County Sheriff's Department. ~~Police officers enforce the statutes of the State of California and City municipal ordinances.~~ Assigned officers are considered city police and use vehicles identified by the City of Goleta logo. A lieutenant is appointed as police chief, and attends weekly staff meetings and submits monthly and annual reports to the City Council. Law enforcement services include 24-hour police patrol for traffic enforcement, accident investigation, vehicle abatement, and parking control, as well as detective services for special investigations. Specialized functions through the Santa

Barbara County Sheriff's Department are provided as needed. These specialized services include K-9, mounted unit patrol, search and rescue, hostage negotiations, intelligence gathering, special enforcement (SWAT) team, dive team, mobile command unit, hazardous devices team, internal affairs investigation, organized crime/gang intelligence unit, polygraph services, reserve forces, fugitive/warrant detail, and/or helicopter/fixed wing patrol. There are also services available for special events and/or natural disaster response (GP/CLUP 2006b).

Public Schools

Public education services are provided to territory within Goleta and the remainder of the Goleta Valley by the Goleta Union School District (GUSD) and the Santa Barbara High School District (SBHSD).

Parks

As of 2005, Goleta's 16 public parks, four private parks and open space areas, and 18 public open space areas comprised a total of 526 acres. The three larger City-owned regional open space preserves – the Sperling Preserve, Santa Barbara Shores Park, and Lake Los Carneros Natural and Historical Preserve – collectively accounted for 363 acres of that total (GP/CLUP 2006b). The City recently completed improvements at Armitos Park, north of the project site, which serves the immediate area.

Library Services

Services at the Goleta Public Library are provided by contract with the City of Santa Barbara in a facility owned by the City of Goleta at 500 North Fairview Avenue. The 2-acre library site includes a 15,437-square-foot building and parking areas. This facility provides services for the city and nearby unincorporated areas (GP/CLUP 2006b).

Thresholds of Significance

A significant impact on fire and police protection services would be expected to occur if the project resulted in substantial effects noted in the above checklist.

Project Specific Impacts

a-e) The proposed project would replace an existing bridge and would not add a new use to the area that could result in an increase in demand for police or fire protection services or increase in demand for public services. The existing bridge facilitates local transportation for occasional emergency fire and/or police protection services. The replacement of the existing bridge and associated improvements would not result in any new demand on these services. The infrastructure project would not impact any schools, parks, or other public facilities since the project would not add new people to the area that would be in

need of these services. Traffic delays during construction could occur but such impacts would be temporary and Hollister Avenue will be open during construction. No significant project impacts on public services are expected.

Cumulative Impacts

The proposed project would replace an existing bridge. No new uses would be added to the project area that could result in increased demand for police or fire protection services or increase in demand for public services that could contribute to a cumulative impact.

Required Mitigation Measures

No mitigation measures are required or recommended.

Residual Impact

No residual project-specific impacts on public services would result.

12.15 Recreation

	Potentially Significant Impact	Less Than Significant With Mitigation Incorporated	Less Than Significant Impact	No Impact	See Prior Document
a. Would the project increase the use of existing neighborhood and regional parks or other recreational facilities such that substantial physical deterioration of the facility would occur or be accelerated?			■		
b. Does the project include recreational facilities or require the construction or expansion of recreational facilities which might have an adverse physical effect on the environment?			■		

Existing Setting

There is a planned future park site to the north of Hollister Avenue, adjacent to San Jose Creek according to the GP/CLUP Park and Recreation Map. The nearest existing park to the project site is Armitos Park located to the north on Armitos Avenue, just east of South Kellogg in Old Town. Armitos Park features playground equipment, benches, a grass area, a pathway, and landscaping. The developed park area encompasses just under 0.5 acre of the 1.5-acre parcel, with the remaining portions of the parcel left in its natural state.

Thresholds of Significance

A significant impact on recreation would be expected to occur if the project resulted in any substantial effects noted in the above checklist.

Project Specific Impacts

a,b) The proposed project would replace an existing bridge with associated improvements and would not introduce a new use to the area that could result in increased demand for park and recreational facilities. The proposed project does not include recreational facilities which might have an adverse physical effect on the environment. Therefore, no significant project impacts on recreational facilities would result.

Cumulative Impacts

The project would not contribute to cumulative impacts on the City's recreational resources since the Project would not add new recreational facilities or create a new use in the area that would result in increased demand for existing recreational facilities.

Required Mitigation Measures

No mitigation measures are required or recommended.

Residual Impact

No residual project-specific impacts on existing recreational facilities would result.

12.16 Transportation/Traffic

Would the project:	Potentially Significant Impact	Less Than Significant With Mitigation Incorporated	Less Than Significant Impact	No Impact	See Prior Document
a. Cause an increase in traffic which is substantial in relation to the existing traffic load and capacity of the street system (i.e., result in a substantial increase in either the number of vehicle trips, the volume to capacity ratio on roads, or congestion at intersections)?			■		
b. Exceed, either individually or cumulatively, a level of service standard established by the County congestion management agency for designated roads or highways?			■		
c. Conflict with an applicable plan, ordinance, or policy establishing measures of effectiveness for the performance of the circulation system, taking into account all modes of transportation including mass transit and non-motorized travel and relevant components of the circulation system, including but not limited to intersections, streets, highways and freeways, pedestrian and bicycle paths, and mass transit?		■			
d. Conflict with an applicable congestion management program, including, but not limited to level of service standards and travel demand measures, or other standards established by the county congestion management agency for designated roads or highways?			■		

Would the project:	Potentially Significant Impact	Less Than Significant With Mitigation Incorporated	Less Than Significant Impact	No Impact	See Prior Document
e. Result in a change in air traffic patterns, including either an increase in traffic levels or a change in location that results in substantial safety risks?				■	
f. Substantially increase hazards due to a design feature (e.g., sharp curves or dangerous intersections) or incompatible uses (e.g., farm equipment)?			■		
g. Result in inadequate emergency access?		■			
h. Conflict with adopted policies, plans, or programs regarding public transit, bicycle, or pedestrian facilities, or otherwise decrease the performance or safety or such facilities?			■		

Existing Setting

The project site is served by a network of city streets and SR 217. The existing bridge is located on Hollister Avenue, which is a major arterial roadway that serves as an east/west surface street route in the City. There are three key intersections in the vicinity of the project site as identified in the GP/CLUP Transportation Element, including Hollister Avenue/Kellogg Avenue, Hollister Avenue/SR 217 southbound ramp, and Hollister Avenue/SR 217 northbound ramp.

As ~~noted in the table~~shown below, traffic at the SR 217 southbound ramps at Hollister Avenue is anticipated to be operating below the City's level of service (LOS) standard of C. The other two intersections are anticipated to operate acceptably under 2015 baseline conditions. The baseline year of 2015 was selected since that is when construction of the traffic improvements is anticipated to begin. Construction of the Project will be coordinated with construction of two new roundabouts that will be built along Hollister Avenue as part of the previously approved Ekwill Street and Fowler Road Extensions Project. The Ekwill-Fowler PS&E Construction Phasing Traffic

Analysis (Kittleson & Associates 2014) is included in this IS/MND as Appendix H and provides a reference document for the information in Table 12, below.

Table 12: 2015 Baseline Traffic Conditions

	2015 Baseline Conditions	
	Morning Peak Hour	Evening Peak Hour
Key Intersection	**V/C -LOS**	**V/C- LOS**
Kellogg Avenue/Hollister Avenue	0.70 – B	0.69 – B
State Route 217 Southbound Ramps/Hollister Avenue	35.5 – D	41.8 – D
State Route 217 Northbound Ramps/Hollister Ave.	26.9 – C	32.1 – C

Source: Ekwill-Fowler PS&E Construction Phasing Traffic Analysis 2014. Note: V/C = volume/capacity ratio; LOS = level of service.

Thresholds of Significance

A significant project-generated traffic impact would be expected to occur if the project resulted in any of the impacts noted in the above checklist. Additional thresholds of significance are set forth in the City's *Environmental Thresholds & Guidelines Manual* and include the following:

~~1.~~1) The addition of project traffic to an intersection increases the volume to capacity (V/C) ratio by the value provided below or sends at least 5, 10, or 15 trips to intersections operating at LOS F, E or D.

LEVEL OF SERVICE (including the project)	INCREASE IN V/C (greater than)
A	.20
B	.15
C	.10
OR THE ADDITION OF	
D	15 trips
E	10 trips
F	5 trips

~~2.~~2) Project access to a major road or arterial road would require a driveway that would create an unsafe situation or a new traffic signal or major revisions to an existing traffic signal.

~~3.~~3) Project adds traffic to a roadway that has design features (e.g., narrow width, roadside ditches, sharp curves, poor sight distance, inadequate pavement structure) or receives use which would be incompatible with a substantial increase in traffic (e.g., rural roads with use by farm equipment, livestock,

horseback riding, or residential roads with heavy pedestrian or recreational use, etc.) that will become potential safety problems with the addition of project or cumulative traffic.

~~4.~~4) Project traffic would utilize a substantial portion of an intersection's capacity where the intersection is currently operating at acceptable levels of service (A-C), but with cumulative traffic would degrade to or approach LOS D (V/C 0.81) or lower. Substantial is defined as a minimum change of 0.03 for intersections that would operate from 0.80 to 0.85 and a change of 0.02 for intersections that would operate from 0.86 to 0.90, and 0.01 for intersections operating at anything lower.

Project Specific Impacts

a-d) The proposed project would not increase traffic capacity or otherwise cause an increase in traffic relative to existing conditions, would not exceed individually or cumulatively a level of service standard, or conflict with a congestion management plan or applicable plans, policies or ordinances established for the performance of the circulation system. The proposed Project would replace an existing bridge and would not add a new use to the area or increase the capacity that could generate additional vehicle trips. Since the proposed Project would not increase capacity or introduce a new use into the area that could generate additional vehicular trips, Project impact from long-term operations would be less than significant.

During construction, local traffic circulation and the level of service at SR 217/Hollister Avenue could be negatively affected by construction equipment and vehicles, as well as temporary lane closures. Traffic impacts associated with construction activities would be considered short-term and temporary. Nonetheless, mitigation measure T-1, requiring a construction traffic control plan has been incorporated to reduce project construction impact to less than significant.

Santa Barbara Metropolitan Transit District (MTD) provided comments to the Draft IS/MND. The comment provided that the proposed project may result in the closure of one or more bus stops along Hollister Avenue and may cause traffic delays during construction. A detailed response to MTD comments is provided in Appendix K. The response indicates that the closure of the bus stop is due to the construction of a roundabout associated with the previously approved Ekwill Street and Fowler Road Extensions Project, not the bridge replacement project. Because the roundabout and the bridge replacement are adjacent to one another, their designs are being coordinated but they are separate projects. MTDs comment that may be temporary traffic delays during construction of the bridge replacement project is acknowledged (see paragraph above).

A local resident also commented that project construction would result in the closure of one westbound lane along Hollister Avenue, which would restrict traffic trying to exit Dearborn Place. A detailed response to that traffic comment is

provided in Appendix K. That response indicates that westbound Hollister Avenue will be reduced to one-lane for approximately 6-9 months. The traffic analysis looked at the most conservative approach and predicted that about 13 percent of the existing traffic in AM peak on westbound Hollister Avenue at Dearborn Place will divert to some other route, primarily to US 101. Motorists leaving Dearborn Place along westbound Hollister Avenue during the AM peak therefore are expected to experience less total traffic compared to existing (pre-construction) conditions. With the SR-217 southbound on-ramp closure, PM peak traffic destined to Dearborn Place will experience about 25 percent less traffic east of SR-217 southbound ramps. Relative to the baseline (i.e. no construction) conditions, the intersection of Hollister Avenue/SR-217 southbound ramps was projected to operate at better level of service grades with one westbound Hollister Avenue lane and SR-217 southbound on-ramp closure.

e) The proposed project would not result in a change in air traffic patterns including either an increase in traffic levels or a change in location that results in a substantial safety risk. The proposed project would replace an existing ground-level bridge and would not increase capacity or introduce a new use into the area that could generate additional air traffic or otherwise affect use of the nearby Santa Barbara Airport. Therefore, no project impact would result.

f) The proposed project would replace an existing bridge with associated improvements. While the replacement bridge would have a somewhat different alignment in order to better link to the traffic improvements approved as part of the Ekwill/Fowler project, the proposed design is intended to improve traffic flow and would not substantially increase hazards due to a design feature or incompatible use. Project impact would be less than significant.

g) Per standard procedures, emergency vehicles are granted right-of-way in cases of emergency. The proposed project would not result in inadequate emergency access during long-term operations. During short-term temporary Project construction activities, there is a potential to adversely impact emergency access. Therefore, mitigation measure T-1, requiring a construction traffic control plan has been incorporated to reduce project construction impacts to less than significant.

h) The proposed project would not conflict with adopted polices, plans or programs regarding alternative transit or otherwise decrease the performance or safety of such facilities. The proposed Project would replace an existing bridge and would include bicycle lane/shoulders and 10-foot-wide sidewalks. Santa Barbara Metropolitan Transit District (MTD) provides bus passenger service to the City and would continue to do so with the proposed project. Therefore, no significant adverse project impact on alternative transportation would result.

Cumulative Impacts

The proposed project would replace an existing bridge and would not increase capacity or add a new use to the area that could generate additional trips as part of long-term operations. Therefore, no long-term cumulative impacts related to transportation and traffic would result.

Required Mitigation Measures

T-1 Implement Temporary Traffic Control Modifications:

- Provide traffic controls when lanes are closed due to construction, e.g., flaggers, detour signs, orange safety cones
- Provide detours for emergency vehicles
- Notify the residents or owners of any properties within 1,000 feet and/or adjacent to the project route of the construction schedule at least one week before construction in their vicinity
- Provide access to the affected properties during construction
- Provide alternative routes for bicycles and pedestrians as feasible

Plan requirements and Timing: The construction contractor ~~shall~~ must prepare a Temporary Traffic Control Plan for the City's review and approval. The temporary traffic control measures shall be noted on construction documents and specifications. All temporary traffic control measures shall be made prior to road closure.

Monitoring: The City's contractor and construction manager ~~shall~~ must ensure that the modifications are in place before road closure.

Residual Impact

No residual impacts to transportation and traffic would occur as a result of project implementation.

12.17 Utilities and Service Systems

Would the project:	Potentially Significant Impact	Less Than Significant With Mitigation Incorporated	Less Than Significant Impact	No Impact	See Prior Document
a. Exceed wastewater treatment requirements of the applicable Regional Water Quality Control Board?				■	
b. Require or result in the construction of new water or wastewater treatment facilities or expansion of existing facilities, the construction of which could cause significant environmental effects?			■		
c. Require or result in the construction of new storm water drainage facilities or expansion of existing facilities, the construction of which could cause significant environmental effects?				■	
d. Have sufficient water supplies available to serve the project from existing entitlements and resources, or are new and expanded entitlements needed?			■		
e. Result in a determination by the wastewater treatment provider which serves or may serve the project that it has adequate capacity to serve the project's projected demand in addition to the provider's existing commitments?			■		
f. Be served by a landfill with sufficient permitted capacity to accommodate the project's solid waste disposal needs?			■		
g. Comply with federal, state, and local statutes and regulations related to solid waste?			■		

Existing Setting

Water Supply and Wastewater Management Services

The project site is located within the jurisdiction of the Central Coast Regional Water Quality Control Board. Goleta's water supply and distribution services are provided by the Goleta Water District (GWD) through line and storage facilities owned or controlled

by the district. The district delivers water obtained from the Cachuma Project and the State Water Project and treated through the Corona Del Mar Water Treatment Plant, which has a normal treatment capacity of 24 million gallons per day (GP/CLUP 2006b).

Wastewater services to the project area are provided by the Goleta Sanitary District (GSD) which collects, treats, and disposes of wastewater. The GSD treatment plant, located adjacent to the city and Santa Barbara Municipal Airport on William Moffett Place, has a capacity of 9.7 million gallons per day (based on average daily flow) but is currently limited to 7.64 million gallons per day. Disposal of treated effluent is by ocean outfall offshore from Goleta Beach. The plant currently operates under an NPDES permit issued by the EPA with concurrence by the Central Coast Regional Water Quality Control Board (GP/CLUP 2006b).

Solid Waste

The Santa Barbara County Public Works Department owns and operates the Tajiguas Landfill as well as the South Coast Recycling and Transfer Station. The management of solid waste by the Department includes collection, recycling, disposal, and mitigation for illegal dumping. Within the City, collection services are provided by Marborg Industries. Waste generated in the City is handled at the South Coast Recycling and Transfer Station where recyclable and organic materials are sorted out. The remaining solid waste is disposed of at the Tajiguas Landfill.

The 80-acre Tajiguas Landfill, located 26 miles west of Santa Barbara, has a permitted capacity of 23.3 million cubic yards and is permitted to operate through 2020. The South Coast Recycling and Transfer Station processes 550 tons of waste per day (City of Goleta GP/CLUP Final Environmental Impact Report, 2006b).

Other Utilities

There are a number of utilities located underneath the existing bridge structure. A 6-inch-diameter gas line, water line, fiber optic and telecommunication lines are located under the sidewalk on the north side of the existing bridge. Telecommunication and electrical lines are located under the sidewalk on the south side of the existing bridge. At each corner of the bridge, storm drainage lines run underneath the roadway approaches and empty out into San Jose Creek.

Properties located southeast of the Hollister Avenue Bridge are currently being serviced by an 8-inch sewer line that runs underneath the privately owned steel bridge that is located about 100 feet south of Hollister Avenue. The steel bridge currently provides an alternative access for businesses in the area and more importantly support for a sewer line serving the businesses on the east side of the creek. The sewer line currently hangs below the existing steel bridge and is at risk of damage from debris floating in the creek.

Thresholds of Significance

A significant impact on utilities and service systems would be expected to occur if the project resulted in any of the impacts noted in the above checklist. In addition, under the City's *Environmental Thresholds & Guidelines Manual*, a project that would generate 196 tons of solid waste/year, after receiving a 50 percent credit for source reduction, recycling, and composting would result in a project specific, significant impact on the City's solid waste stream. Any project generating 40 tons/year, after receiving a 50 percent credit for source reduction, recycling, and composting would be considered to make an adverse contribution to cumulative impacts to the City's solid waste stream.

Project Specific Impacts

a) The project site is located within the jurisdiction of the Central Coast Regional Water Quality Control Board. The proposed project would replace an existing bridge with associated improvements and would not add a new use to the area that could exceed wastewater treatment requirements. Therefore, no project impact would occur.

b,d,e) The proposed project would replace an existing bridge with associated improvements and would not add a new use to the area that would require new or expanded water or wastewater treatment services. Properties located southeast of the Hollister Avenue Bridge are currently being serviced by an 8-inch sewer line that runs underneath the privately owned steel bridge that is located about 100 feet south of Hollister Avenue. Since the privately owned steel bridge would be removed as part of this project, the sewer line would need to be relocated to provide service to those properties. This sewer line would be relocated and no project related need for expansion of existing sewer and/or water facilities would result. Therefore, Project impact would be less than significant.

c) The proposed project would replace the existing bridge with associated improvements and would not add a new use to the area that would result in inadequate storm water capacity. At each corner of the existing bridge, storm drainage lines run underneath the roadway approaches and empty out into San Jose Creek. The existing bridge can only convey 25-year flood flows and is a contributing factor to flooding that occurs in Goleta Old Town area. The bridges upstream can convey a 100-year storm. The purpose of the Project is to provide a new bridge that will convey 100-year storm flows and meet current design standards. The new bridge thus would improve storm water flow. Therefore, no adverse project impact would result.

f) The proposed project would replace the existing bridge with associated improvements and would not add a new use to the area that would be a new source of solid waste generation requiring service. The proposed infrastructure project would not generate solid waste as part of long-term project operations.

Waste generation associated with the project would primarily be limited to short-term temporary construction activities and materials would be recycled to the extent feasible. The Project would not result in the generation of any solid waste in violation of any federal, state, or local solid waste regulations or statutes. Therefore, project impact is less than significant.

g) The proposed project would comply with local, state, and federal solid waste requirements and no significant adverse impact would result.

Cumulative Impacts

Project contributions to cumulative impacts on public utilities or service systems such as wastewater collection and treatment, potable water supplies, storm drain and runoff control infrastructure, or the Tajiguas Landfill would be less than significant since no new or expanded service would be required as a result of the project.

Required Mitigation Measures

There are no significant impacts to Utilities and Service Systems and no mitigation measures are required. However, the following recommended measure would minimize less than significant solid waste impacts.

Recommended Mitigation Measures

U-1 A Waste Reduction and Recycling Plan (WRRP) ~~shall~~ must be prepared ~~by the Public Works Department for review and approval~~and approved by the Public Works Director, or designee. The plan ~~shall~~ must indicate how a 50-percent diversion goal ~~shall~~ will be met during construction including, ~~but not limited to~~ without limitation, the following:

~~1.~~a) Demolition and/or excess construction materials ~~shall~~ must be separated on-site for reuse/recycling or proper disposal (e.g., concrete asphalt).

~~2.~~b) During grading and construction, separate bins or areas for recycling of construction materials ~~shall~~ must be provided on-site whenever possible.

~~3.~~c) All demolition materials ~~shall~~ may become the property of the Contractor in accordance with Section 7-1.13 “Disposal of Material Outside of the Highway Right of Way” of the Caltrans Standard Specifications. Recoverable construction material ~~shall~~ includes, without limitation, ~~but not be limited to~~ asphalt, lumber, concrete, glass, metals, and drywall.

Plan Requirement and Timing: This requirement ~~shall~~ must be included in construction contract documents and specifications.

Monitoring: Before the City files a Notice of Completion, ~~At the end of the project,~~ the construction contractor ~~shall~~ must submit a Post-Construction Waste

Reduction and Recycling Summary Report to the Public Works Director, or designee, documenting the types and amounts of materials that were generated during the project and how much was reused, recycled, composted, salvaged, or landfilled.

U-2 Demolition and/or excess construction materials ~~shall~~ must be separated on-site for reuse/recycling or proper disposal (e.g., concrete asphalt). During grading and construction, separate bins for recycling of construction materials and plant material (e.g., brush) ~~shall~~ must be provided on-site.

Plan Requirements and Timing: ~~City staff shall~~The Public Works Director, or designee, must ensure construction and specifications include these measures, including provision for construction management reports to verify compliance. The contractor ~~shall~~ must submit a post-construction waste reduction and recycling summary to the ~~Community Services Department~~Public Works Director, or designee. Materials shall be recycled as necessary throughout construction.

Monitoring: ~~City staff~~ The Public Works Director, or designee, must ~~shall~~ verify compliance ~~prior to~~ before issuing grading permits. ~~start of construction.~~

Residual Impact

Upon implementation of the above mitigation measures, impacts on short-term solid waste generation would remain adverse but not significant. There would be no residual impacts associated with wastewater, water, and stormwater facilities.

13 MANDATORY FINDINGS OF SIGNIFICANCE

Would the project:	Potentially Significant Impact	Less Than Significant With Mitigation Incorporated	Less Than Significant Impact	No Impact	See Prior Document
a. Does the project have the potential to degrade the quality of the environment, substantially reduce the habitat of a fish or wildlife species, cause a fish or wildlife population to drop below self-sustaining levels, threaten to eliminate a plant or animal community, reduce the number or restrict the range of a rare or endangered plant or animal or eliminate important examples of the major periods of California history or prehistory?		■			
b. Does the project have impacts that are individually limited, but cumulatively considerable? ("Cumulatively considerable" means that the incremental effects of a project are considerable when viewed in connection with the effects of past projects, the effects of other current projects, and the effects of probable future projects.)			■		
c. Does the project have environmental effects which will cause substantial adverse effects on human beings, either directly or indirectly?			■		

14 PREPARERS OF THE ~~DRAFT~~ MITIGATED NEGATIVE DECLARATION, CONTACTS, AND REFERENCES

This document was prepared by the ~~City of~~ Goleta Public Works Department staff and URS Corporation and reviewed by the ~~City of~~ Goleta Planning and Environmental Services Department. Drake Haglan & Associates provided site plans and other engineering-related information.

14.1 Contributors and Contacts

The following individuals participated in the analysis of the project or otherwise furnished information vital to preparation of this document.

City of Goleta

Rosemarie Gaglione, ~~Interim~~ Public Works Director

Jennifer Carman, Planning and Environmental Review Director

Karl Berger, Contract City Attorney

Gerald Comati, (Consulting Project Manager, COM3 Consulting)

Laura Bridley, (Contract Planner, City Public Works)

Contractors

Craig Woodman, Environmental Project Manager, URS Corporation

Renee Longman, AICP, Senior Environmental Planner, URS Corporation

Christopher Julian, Biological Resources, URS Corporation

Eilhu Gevirtz, Biological Resources, URS Corporation

Matt Moore, Water Quality Assessment, URS Corporation

Matt Dunn, Air Quality, URS Corporation

Paul Burge, Noise, URS Corporation

Brent Leftwich, Cultural Resources, URS Corporation

Corinne Lytle Bonine, Visual Resources, URS Corporation

Brian Smith, Independent Technical Review, URS Corporation

14.2 References

Bay Area Air Quality Management District (BAAQMD). 2010. California Environmental Quality Act Air Quality Guidelines.

California Air Pollution Controls Officers Association (CAPCOA). 2008. Technical Advisory; CEQA and Climate Change: Addressing Climate Change Through the California Environmental Quality Act (CEQA) Review.

California Air Resources Board (CARB). 2011. California Greenhouse Gas Emissions Inventory 2000-2009. Available at: http://www.arb.ca.gov/cc/inventory/pubs/reports/ghg_inventory_00-09_report.pdf [Accessed April 26, 2013].

009. Greenhouse Gas Reporting in a Cap-and-Trade Program-Background Information. Available at: http://www.arb.ca.gov/cc/capandtrade/meetings/021809/summary.pdf [Accessed April 26, 2013].

California Department of Fish and Wildlife (CDFW). 2014. Special Animals List. Available online at: http://www.dfg.ca.gov/biogeodata/cnddb/pdfs/SPAnimals.pdf. Accessed through October 16, 2014.

2013. State and Federally Listed Endangered, Threatened, and Rare Plants of California. Biogeographic Data Branch. California Natural Diversity Database (CNDDB). July.

2010. List of California Terrestrial Natural Communities. Available online at http://www.dfg.ca.gov/biogeodata/vegcamp/pdfs/natcomlist.pdf. September 2010. Accessed through October 29, 2013.

California Department of Toxic Substance Control (DTSC). Envirostor data base. Accessed: http://www.envirostor.dtsc.ca.gov. November 2013.

California Department of Transportation (Caltrans). 2014. Methods for Excluding Cliff Swallows from Nesting on Highway Structures. http://www.dot.ca.gov/newtech/environmental/swallows.htm (accessed August 19, 2014)

California Department of Transportation (Caltrans). 2013. Structure and Maintenance Investigations: Local Agency Bridge List. September, 2013. Available online at: http://www.dot.ca.gov/hq/structur/strmaint/local/localbrlist.pdf. Accessed through October 29, 2013.

2009. Technical Noise Supplement, November 2009.

California Energy Commission. 2005. Global Climate Change and California. Available online at: http://www.energy.ca.gov/2005publications/CEC-600-2005-007/CEC-600-2005-007-SF.PDF.

California Native Plant Society. 2013. The Online CNPS Inventory of Rare and Endangered Plants (8th Edition). Accessed October 8, 2013.

California Farmland Mapping and Monitoring Program (FMMP). 2013. Santa Barbara County Important Farmland 2010 Map. Reissued July 2013.

California Regional Water Quality Control Board, Central Coast Region. 2013. Resolution No. R3-2013-0032. July 12, 2013.

2010. 2010 Integrated Report (Clean Water Act Section 303(d) List / 305(b) Report) http://www.sbprojectcleanwater.org/.

Center for Climate and Energy Solutions. 2013. Clean Air Act Cases. Available at:http://www.c2es.org/federal/courts/clean-air-act-cases [Accessed April 26, 2013].

Chartkoff, J. 1967. *Archaeological Resources on Fourteen Stream Channels in Coastal Santa Barbara County, California*. Prepared for the National Park Service, Western Region. Archaeological Survey, University of California, Los Angeles.

City of Goleta. 2013. City of Goleta CommunityView. Accessed at: http://maps.digitalmapcentral.com/production/vecommunityview/cities/goleta/index.aspx.

2011. Ekwill Street and Fowler Road Extensions Project (SCH No. 2004061072) Final Environmental Impact Report. November 2011.

2009. General Plan/Coastal Land Use Plan, SEIR. 2009.

2007. Mitigated Negative Declaration San Jose Creek Capacity Improvement Project. May 2007.

2006a. Goleta General Plan/Coastal Land Use Plan, September 2006, and Amendments 2009 (?).

2006b. Final Goleta General Plan/Coastal Land Use Plan Environmental Impact Report. September 2006. Prepared by City of Goleta, Planning and Environmental Services Department.

2002. City CEQA Thresholds Manual. County of Santa Barbara Environmental Thresholds and Guidelines Manual October Available online at: http://www.cityofgoleta.org/index.aspx?page=459.

City of Goleta Municipal Code, Article III, Chapter 35, Zoning Regulations.

Consortium of California Herbaria (ucjeps.berkeley.edu/consortium/) accessed October 24, 2013.

County of Santa Barbara. 2002. County of Santa Barbara Stormwater Management Program, Surface and Storm Water Quality Guidelines.

Dalquest, W.W. 1947. Notes on the Natural History of the Bat *Corynorhinus rafinesquii* in California. Journal of Mammalogy 28:17-30.----

Entrix, Inc. 2010. San Jose Creek Capacity Improvement Project Biological Resources Survey Report. October 19, 2010.

Erickson, Gregg A., et al. 2002. Bat and Bridges Technical Bulletin (Hitchhiker Guide to Bat Roosts), California Department of Transportation, Sacramento, CA.

Federal Transit Administration. 2006. Transit Noise and Vibration Impact Assessment (FTA-VA-90-1003-06). May 2006.

Fugro Consultants, Inc. 2013. Preliminary Foundation Report, Hollister Avenue Bridge over San Jose Creek (Bridge No. 51C-027) Goleta, California. Prepared for Drake Haglan & Associates.

Glassow, M. and L. Wilcoxon. 1988. Coastal Adaptation Near Point Conception, California, With Particular Regard to Shellfish Exploitation. *American Antiquity* 53: 36–51.

Heady, P. A. III and W. Frick. 2014. Report of Work for Bat Surveys and Mitigation Development for Hollister Avenue Bridge over San Jose Creek. Prepared for URS Corporation by the Central Coast Bat Research Group.

Kittelson & Associates, Inc. 2014. Ekwill-Fowler PS&E Construction Phasing Traffic Analysis. March 7, 2014.

Lehman, P. 2012. The Birds of Santa Barbara County, California. Revised Draft.

Lichvar, R.W. 2013. The National Wetland Plant List: 2013 wetland ratings. Phytoneuron 2013–49: 1–241. Published 17 July. 2013. ISSN 2153 733X.

Los Angeles Times. 2014. Caltrans to remove nets from construction sites to save swallows. January 17, 2014. By Louis Sahagun. http://articles.latimes.com/2014/jan/17/science/la-sci-sn-swallows-caltrans-bridges-20140117

Maki, M. 2012. *Phase I Archaeological Investigation of Approximately 0.6-Acres for the Armitos Park to Kellogg Park Creek Trail, Project #9007, Goleta, Santa Barbara County, California.* Prepared for the City of Goleta.

Santa Barbara County Air Pollution Control District (SBCAPCD). 2013. *Santa Barbara County Air Quality Attainment Designation*, Downloaded from http://www.sbcapcd.org/sbc/attainment.htm November 2013.

2011. Scope and Content of Air Quality Sections in Environmental Documents. December 2011.

Sawyer, J., T. Keeler-Wolf and J. Evens. 2009. A Manual of California Vegetation. Second Edition. California Native Plant Society in Collaboration with California Department of Fish and Game. Sacramento, California.

Science Applications International Corporation (SAIC). 2009. *An Archaeological Inventory Survey: San Jose Creek Capacity Improvement Project in the City of Goleta, Santa Barbara County, California*. Prepared for the City of Goleta, California.

2007. California Red-Legged Frog and Other Wildlife Survey Report. San Jose Creek Capacity Improvement Project. City of Goleta, Santa Barbara County, California. January.

Stebbins, R. 2003. Western Reptiles and Amphibians. Third Edition. Houghton Mifflin Company.

Stoecker, M. 2002. Steelhead Assessment and Recovery Opportunities in Southern Santa Barbara County, California.

URS Corporation (URS). 2012. Letter to Rosemarie Gaglione, City of Goleta Community Services Department re: Protocol Least Bell's Vireo Survey Report for City of Goleta's Ekwill/Fowler Project. August 15.

U.S. Climate Change Science Program. 2009. Climate Literacy, The Essential Principles of Climate Sciences. A Guide for Individuals and Communities. Available at: http://www.climatescience.gov/ Library/Literacy/ [Accessed November 15, 2012].

U.S. Environmental Protection Agency (USEPA). 2013. Overview of Greenhouse Gases. Available at: http://www.epa.gov/climatechange/ghgemissions/gases.html [Accessed April 26, 2013].

U.S. Environmental Protection Agency (USEPA). AP-42, Compilation of Air Pollutant Emission Factors USEPA. http://www.epa.gov/ttnchie1/ap42/.

Wilcoxon, L., J. Erlandson, and D. Stone. 1982. *Final Report – Intensive Cultural Resources Survey for the Goleta Flood Protection Program, Santa Barbara County, California*. Prepared for the U.S. Army Corps of Engineers, Los Angeles District.

15 APPENDICES

~~With the exception of confidential Appendix D, the following documents are available on the City's website for CEQA Review (http://www.cityofgoleta.org/index.aspx?page=198). Agencies requiring hard copies of this Initial Study/Mitigated Negative Declaration will find the appendices provided on a CD located the end of the document.~~

Appendix A Site Plans
Appendix B Criteria Pollutant Emissions Technical Memorandum
Appendix C Biological Resources Summary Report
Appendix D Archaeological Survey Report
Appendix E Greenhouse Gas Emissions Technical Memorandum
Appendix F Initial Site Assessment
Appendix G Construction Noise Impact Assessment Technical Memorandum
Appendix H Ekwill-Fowler PS&E Construction Phasing Traffic Analysis
Appendix I Scenic Resource Evaluation and Visual Impact Assessment
Appendix J Water Quality Assessment
Appendix K Public Comments and Responses
Appendix L Mitigation Monitoring and Reporting Program

APPENDIX A
SITE PLANS

1	18,159 sq ft	TEMP CONST ESMT
2	185 sq ft	SUBSURFACE ESMT
3	201 sq ft	PERMANENT ESMT
4	1,905 sq ft	TEMP CONST ESMT
5	318 sq ft	SUBSURFACE ESMT
6	531 sq ft	PERMANENT ESMT

13	1,222 sq ft	TEMP CONST ESMT
14	474 sq ft	SUBSURFACE ESMT
15	2,171 sq ft	PERMANENT ESMT
16	732 sq ft	TEMP CONST ESMT
17	12 sq ft	SUBSURFACE ESMT
18	1,678 sq ft	PERMANENT ESMT

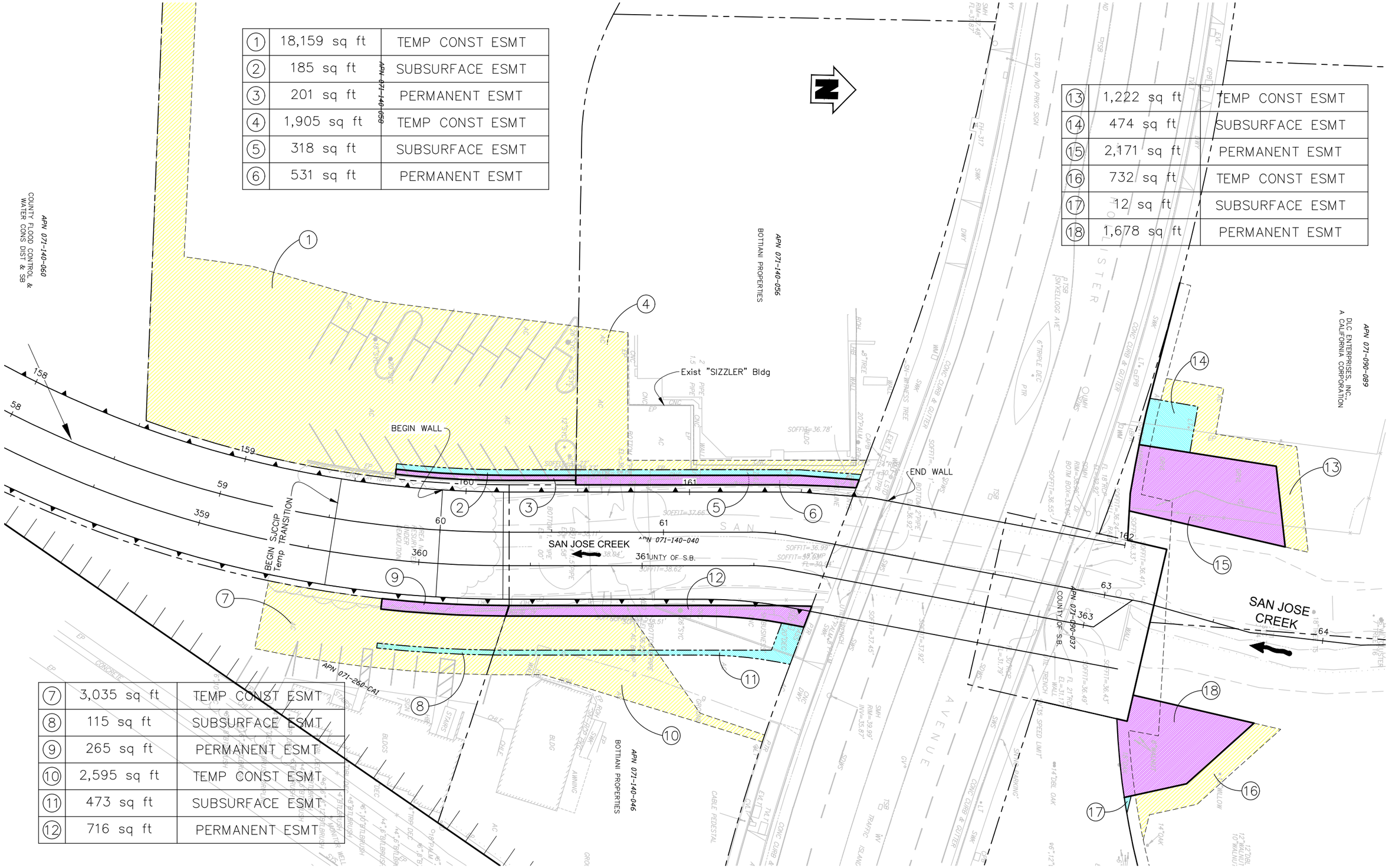

PLAN
1"=20'

HOLLISTER BRIDGE - PERMANENT, SUBSURFACE, AND TEMP CONSTRUCTION EASEMENTS

DIST	COUNTY	ROUTE	POST MILES TOTAL PROJECT	SHEET No	TOTAL SHEETS
5	SB	X		X	X

REGISTERED CIVIL ENGINEER — DATE X

PLANS APPROVAL DATE

REGISTERED PROFESSIONAL ENGINEER — No. X — Exp. X — CIVIL — STATE OF CALIFORNIA

DRAKE HAGLAN AND ASSOCIATES OR ITS OFFICERS OR AGENTS SHALL NOT BE RESPONSIBLE FOR THE ACCURACY OR COMPLETENESS OF ELECTRONIC COPIES OF THIS PLAN SHEET.

drake haglan AND ASSOCIATES
11060 White Rock Road, Suite 200
Rancho Cordova, CA 95670

PROFILE GRADE
NOT TO SCALE

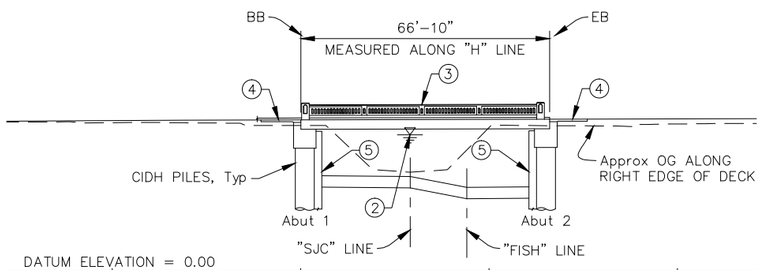

ELEVATION
1"=20'

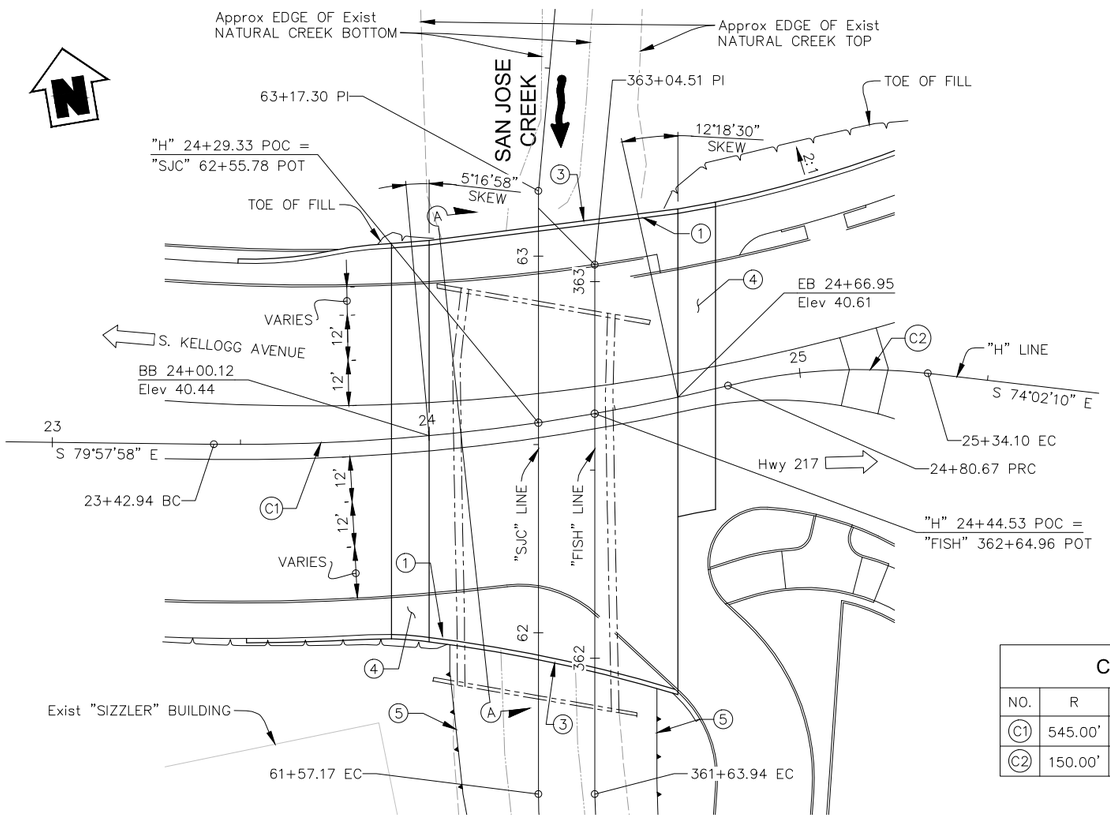

PLAN
1"=20'

CURVE DATA				
NO.	R	Δ	T	L
C1	545.00'	14°28'46"	69.23'	137.73'
C2	150.00'	20°24'34"	27.00'	53.43'

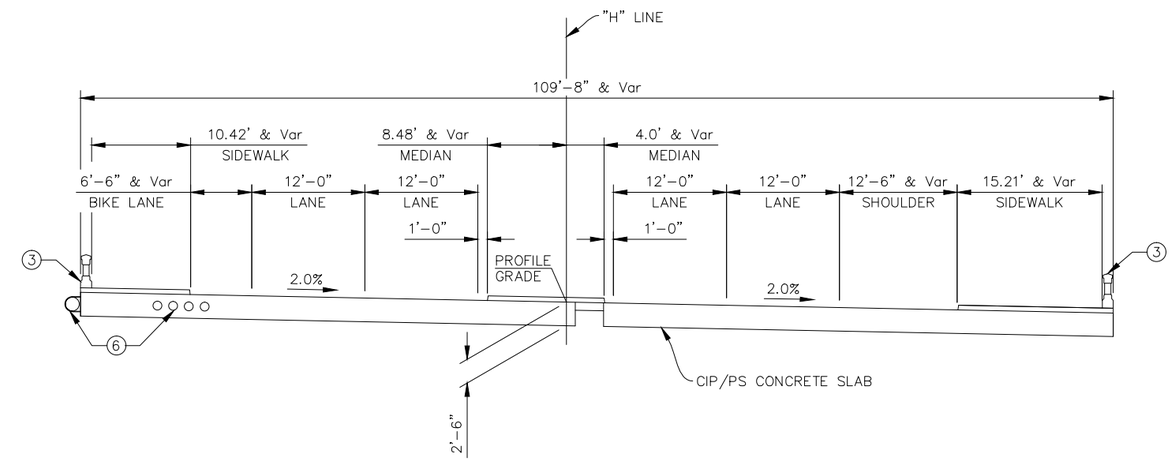

SECTION A-A
⅛"=1'−0"

NOTES:

1. For Staged Construction and Traffic see "STAGED CONSTRUCTION" sheet.
2. Existing bridge not shown

NOTES:

1. Paint Bridge Number (51C−0382), year completed, and "San Jose Creek Bridge"
2. 100 Year Water Surface Elevation, See "FOUNDATION PLAN" sheet for Hydrologic Data
3. Aesthetic Concrete Barrier
4. Structure Approach Type EQ(10)
5. Channel Wall
6. Proposed Utility relocations (TBD)

LEGEND:

- Indicates Direction of Water Flow
- Indicates Direction of Traffic
- Indicates Existing Structure to be removed

65% PLANS - NOT FOR CONSTRUCTION

USERNAME => mburgard DATE PLOTTED => Aug 19, 2014 TIME PLOTTED => 7:43 am

DESIGN OVERSIGHT	DESIGN	BY M. Burgard	CHECKED J. Elmensdorp	LOAD & RESISTANCE FACTOR DESIGN	LIVE LOADING: HL93 W/ "LOW−BOY" AND PERMIT DESIGN VEHICLE
	DETAILS	BY A. Barba	CHECKED X	LAYOUT BY X	CHECKED X
SIGN OFF DATE	QUANTITIES	BY X	CHECKED X	SPECIFICATIONS BY X	PLANS AND SPECS COMPARED X

STRUCTURES DESIGN GENERAL PLAN SHEET (ENGLISH) (REV. 10/25/05)

ORIGINAL SCALE IN INCHES FOR REDUCED PLANS 0 1 2 3

PREPARED FOR THE
CITY OF GOLETA
DEPARTMENT OF PUBLIC WORKS

PROJECT ENGINEER

CU
EA

BRIDGE NO. X — POST MILE X

HOLLISTER AVE BRIDGE OVER SAN JOSE CREEK
GENERAL PLAN

DISREGARD PRINTS BEARING EARLIER REVISION DATES → X/X/X

REVISION DATES — SHEET 1 OF X

FILE => U:\12036 − Hollister Bridge Project − City of Goleta\400 Project Design Files\430 Bridges & Structures\Submittal 65%\Plans\HB−S−GP.dwg

STRUCTURES DESIGN GENERAL PLAN SHEET (ENGLISH) (REV.07−24−06)

DIST	COUNTY	ROUTE	POST MILES TOTAL PROJECT	SHEET No	TOTAL SHEETS
5	SB	X		X	X

REGISTERED CIVIL ENGINEER X DATE

PLANS APPROVAL DATE

REGISTERED PROFESSIONAL ENGINEER X No. X Exp. X CIVIL STATE OF CALIFORNIA

DRAKE HAGLAN AND ASSOCIATES OR ITS OFFICERS OR AGENTS SHALL NOT BE RESPONSIBLE FOR THE ACCURACY OR COMPLETENESS OF ELECTRONIC COPIES OF THIS PLAN SHEET.

drake haglan AND ASSOCIATES
11060 White Rock Road, Suite 200
Rancho Cordova, CA 95670

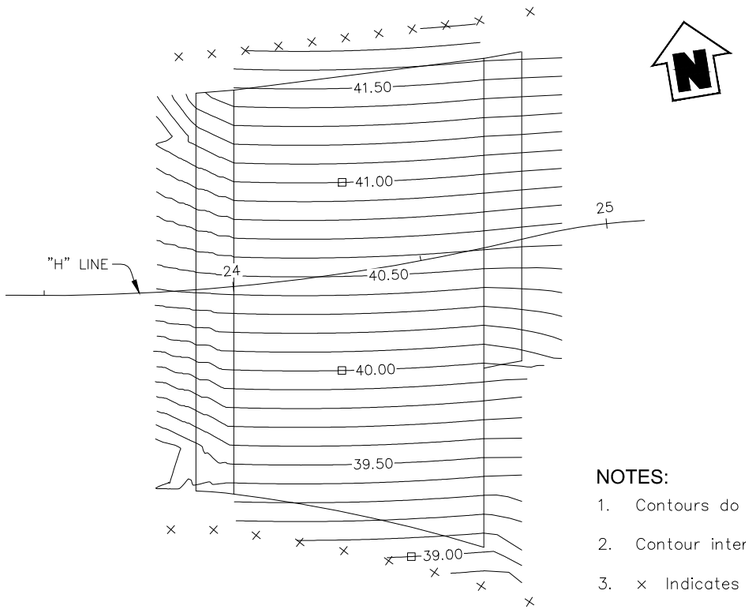

PLAN
1"=20'

NOTES:

1. Contours do not include camber.
2. Contour interval is 0.10'.
3. × Indicates 10' increments along station line.
4. □ Indicates whole foot contours.

CONCRETE STRENGTH AND TYPE LIMITS

NO SCALE

- Structural Concrete, Bridge (f'c = 5000 psi @ 28 Days)*
- Structural Concrete, Bridge (f'c = 4000 psi @ 28 Days)
- Cast-In-Drilled-Hole Concrete Pile (f'c = 4000 psi @ 28 Days)
- Structural Shotcrete (f'c = 4000 psi @ 28 Days)
- Structural Concrete, Structure Approach

*See Prestressing Notes

NOTE:
THE CONTRACTOR SHALL VERIFY ALL CONTROLLING FIELD DIMENSIONS BEFORE ORDERING OR FABRICATING ANY MATERIAL.

LOAD AND RESISTANCE FACTOR DESIGN

DESIGN: AASHTO LRFD Bridge Design Specifications, 4th Edition and the Caltrans Amendments, preface dated November 2011.

SEISMIC DESIGN: Caltrans Seismic Design Criteria (SDC), Version 1.7 April 2013.

DEAD LOAD: Includes 35 psf for future wearing surface and 100 plf for utilites

LIVE LOADING: HL93 and permit design load.

SEISMIC LOADING: Soil profile: Vs30 = 270 m/s
Moment Magnitude: 7.0

Peak Ground Acceleration = 0.75g

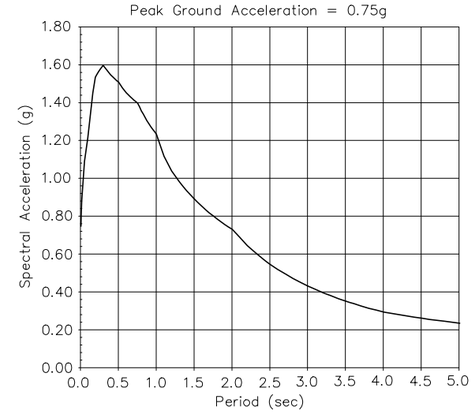

REINFORCED CONCRETE: fy = 60 ksi
f'c = See Concrete Strength and Type Limits

STRUCTURAL STEEL: fy = 50 ksi

INDEX TO PLANS

NO.	TITLE
S-1	GENERAL PLAN
S-2	DECK CONTOURS
S-3	FOUNDATION PLAN
S-4	STAGED CONSTRUCTION LAYOUT
S-5	STAGED CONSTRUCTION DETAILS
S-6	ABUTMENT 1 LAYOUT
S-7	ABUTMENT 2 LAYOUT
S-8	ABUTMENT DETAILS NO. 1
S-9	ABUTMENT DETAILS NO. 2
S-10	ABUTMENT DETAILS NO. 3
S-11	TYPICAL SECTION STAGE 1
S-12	TYPICAL SECTION STAGE 2
S-13	COMBINATION RAIL TYPE C411 DETAILS NO. 1
S-14	COMBINATION RAIL TYPE C411 DETAILS NO. 2
S-15	COMBINATION RAIL TYPE C411 DETAILS NO. 3
S-16	STRUCTURE APPROACH TYPE EQ(10)
S-17	LOG OF TEST BORINGS NO. 1
S-18	LOG OF TEST BORINGS NO. 2

CALTRANS STANDARD PLANS DATED 2010

	A10A	ABBREVIATIONS (SHEET 1 OF 2)
RSP	A10B	ABBREVIATIONS (SHEET 2 OF 2)
	A10C	LINES AND SYMBOLS (SHEET 1 OF 3)
	A10D	LINES AND SYMBOLS (SHEET 2 OF 3)
	A10E	LINES AND SYMBOLS (SHEET 3 OF 3)
	A62B	LIMITS OF PAYMENT FOR EXCAVATION AND BACKFILL-BRIDGE SURCHARGE AND WALL
	A62C	LIMITS OF PAYMENT FOR EXCAVATION AND BACKFILL-BRIDGE
	B0-1	BRIDGE DETAILS
	B0-3	BRIDGE DETAILS
	B0-13	BRIDGE DETAILS
RSP	B3-4A	RETAINING WALL TYPE 5 (CASE 1)
RSP	B3-5	RETAINING WALL DETAILS NO. 1
	B6-21	JOINT SEALS (MAXIMUM MOVEMENT RATING = 2")
	B8-5	CAST-IN-PLACE PRESTRESSED GIRDER DETAILS

STANDARD PLAN SHEET NO.

DETAIL NO.

65% PLANS - NOT FOR CONSTRUCTION

kdresbach DATE PLOTTED => Jun 25, 2014 TIME PLOTTED => 12:40 pm

DESIGN OVERSIGHT

SIGN OFF DATE

	BY	CHECKED
DESIGN	M. Burgard	J. Elmensdorp
DETAILS	K. Boesbach	X
QUANTITIES	X	X

ORIGINAL SCALE IN INCHES FOR REDUCED PLANS 0 1 2 3

PREPARED FOR THE
CITY OF GOLETA
DEPARTMENT OF PUBLIC WORKS

X
PROJECT ENGINEER

CU
EA

BRIDGE NO. X
POST MILE X

HOLLISTER AVE BRIDGE OVER SAN JOSE CREEK

DECK CONTOURS

DISREGARD PRINTS BEARING EARLIER REVISION DATES X/X/X

REVISION DATES | SHEET 2 | OF X

FILE => U:\12036 – Hollister Bridge Project – City of Goleta\400 Project Design Files\430 Bridges & Structures\Submittal 65%\Plans\HB-S-DC.dwg

STRUCTURES DESIGN GENERAL PLAN SHEET (ENGLISH) (REV.07-24-06)

DIST	COUNTY	ROUTE	POST MILES TOTAL PROJECT	SHEET No	TOTAL SHEETS
5	SB	X		X	X

REGISTERED CIVIL ENGINEER — DATE X

PLANS APPROVAL DATE

REGISTERED PROFESSIONAL ENGINEER — No. X — Exp. X — CIVIL — STATE OF CALIFORNIA

DRAKE HAGLAN AND ASSOCIATES OR ITS OFFICERS OR AGENTS SHALL NOT BE RESPONSIBLE FOR THE ACCURACY OR COMPLETENESS OF ELECTRONIC COPIES OF THIS PLAN SHEET.

drake haglan AND ASSOCIATES
11060 White Rock Road, Suite 200
Rancho Cordova, CA 95670

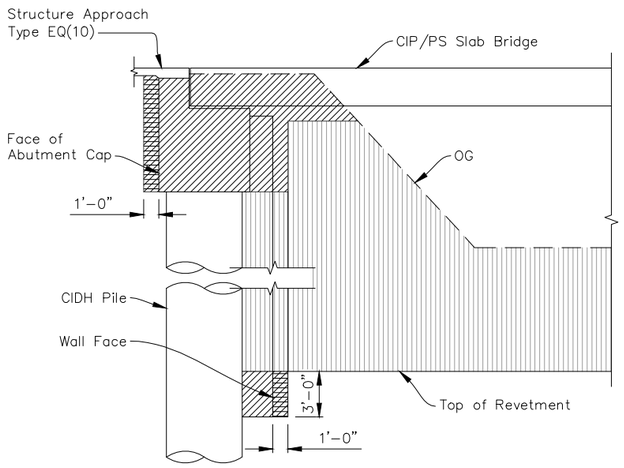

Structural Excavation (Bridge)

Structure Backfill (Bridge)

Channel Excavation

EXCAVATION LIMITS OF PAYMENT

NO SCALE

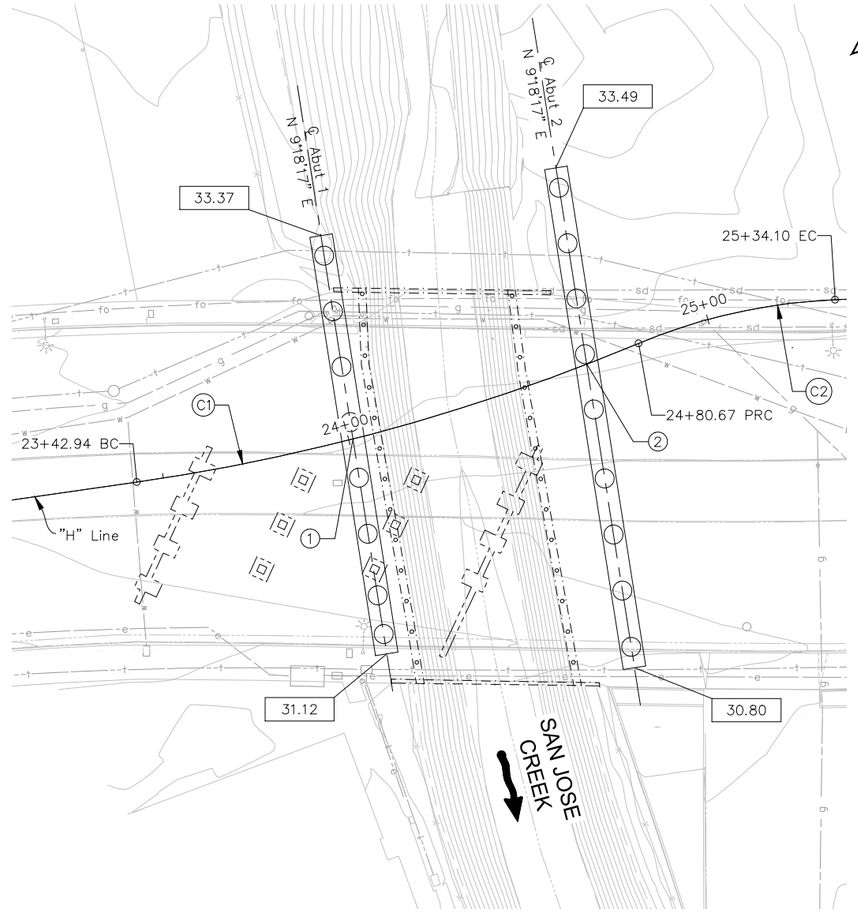

FOUNDATION PLAN

1"=20'

HYDROLOGIC SUMMARY

DRAINAGE AREA: 8.2 SQUARE MILES

	DESIGN * FLOOD	BASE ** FLOOD	OVERTOPPING FLOOD	FLOOD OF RECORD
Frequency (Years)	50	100	> 500	25
Discharge (Cubic feet per second)	3280	5400	8970	2520
Water Surface (Elevation at bridge)	32.36	35.34	39.26	31.16

* Design Flood based on Caltrans Standards and reports the Log Pearson Type III analysis discharge. This project exceeds the Caltrans Design Flood Frequency.

** Base Flood (100 year) is reported from the FEMA FIS and does not coincide with the frequencies determined from the Log Pearson Type III analysis.

Flood plain data is based upon information available when the plans were prepared and are shown to meet federal requirements. The accuracy of said information is not warranted by the City and interested or affected parties should make their own investigation.

PILE DATA TABLE

LOCATION	PILE TYPE	NOMINAL RESISTANCE (kips)		DESIGN TIP ELEVATION (ft)	SPECIFIED TIP ELEVATION (ft)
		COMPRESSION	TENSION		
Abutment 1	60" CIDH	950	100	XX (a) XX (b) XX (c) -31 (d)	XX
Abutment 2	60" CIDH	950	100	XX (a) XX (b) XX (c) -34 (d)	XX

Note: 1) Design tip elevations for abutments are controlled by: (a) Compression, (b) Tension, (c) Settlement, (d) Lateral Load

	NORTHING	EASTING
1 ℄ Abutment 1 Sta 24+01.13	N 1985875.56	E 6013144.66
2 ℄ Abutment 2 Sta 24+65.93	N 1985874.98	E 6013209.42

BENCH MARK:

NGS Benchmark designation – 43 LA=F 28, PID – EW3774 Elev. 48.36 Feet (NAVD 88)
Found a capped 3-1/2 – inch iron pipe flush with ground. In Goleta, CA near the intersection of the SPRR with Kellogg Avenue, 117 feet south of the near rail, 29 feet east of the center of Kellogg Avenue.

N 1987392.3 E 6012995.9 Elev: 48.36

LEGEND:

- Indicates Bottom of Cap Elevation
- Indicates Existing Bridge to remain
- Indicates Existing Bridge be removed
- Indicates Direction of Water Flow
- Indicates CIDH Pile

NOTE:
THE CONTRACTOR SHALL VERIFY ALL CONTROLLING FIELD DIMENSIONS BEFORE ORDERING OR FABRICATING ANY MATERIAL.

65% PLANS - NOT FOR CONSTRUCTION

USERNAME => kdresbach DATE PLOTTED => Jun 25, 2014 TIME PLOTTED => 12:41 pm

DESIGN OVERSIGHT	SCALE:	VERT. DATUM NAVD88	HORIZ. DATUM NAD83	DESIGN BY M. Burgard	CHECKED X
	PHOTOGRAMMETRY AS OF:	ALIGNMENT TIES		DETAILS BY K. Doebbach	CHECKED X
SIGN OFF DATE	QUANTITIES BY	DRAFTED BY		QUANTITIES BY X	CHECKED X
	FIELD CHECKED BY	CHECKED BY			

STRUCTURES DESIGN GENERAL PLAN SHEET (ENGLISH) (REV. 10/25/05)

ORIGINAL SCALE IN INCHES FOR REDUCED PLANS 0 1 2 3

PREPARED FOR THE **CITY OF GOLETA** DEPARTMENT OF PUBLIC WORKS

X PROJECT ENGINEER

CU X
EA X

BRIDGE NO. X
POST MILE X

DISREGARD PRINTS BEARING EARLIER REVISION DATES X/X/X

HOLLISTER AVE BRIDGE OVER SAN JOSE CREEK

FOUNDATION PLAN

REVISION DATES | SHEET 3 | OF X

FILE => U:\12036 – Hollister Bridge Project – City of Goleta\400 Project Design Files\430 Bridges & Structures\Submittal 65%\Plans\HB-S-FP.dwg

STRUCTURES DESIGN GENERAL PLAN SHEET (ENGLISH) (REV.07-24-06)

DIST	COUNTY	ROUTE	POST MILES TOTAL PROJECT	SHEET No	TOTAL SHEETS
5	SB	X		X	X

REGISTERED CIVIL ENGINEER — DATE X

PLANS APPROVAL DATE

REGISTERED PROFESSIONAL ENGINEER — No. X — Exp. X — CIVIL — STATE OF CALIFORNIA

DRAKE HAGLAN AND ASSOCIATES OR ITS OFFICERS OR AGENTS SHALL NOT BE RESPONSIBLE FOR THE ACCURACY OR COMPLETENESS OF ELECTRONIC COPIES OF THIS PLAN SHEET.

drake haglan AND ASSOCIATES
11060 White Rock Road, Suite 200
Rancho Cordova, CA 95670

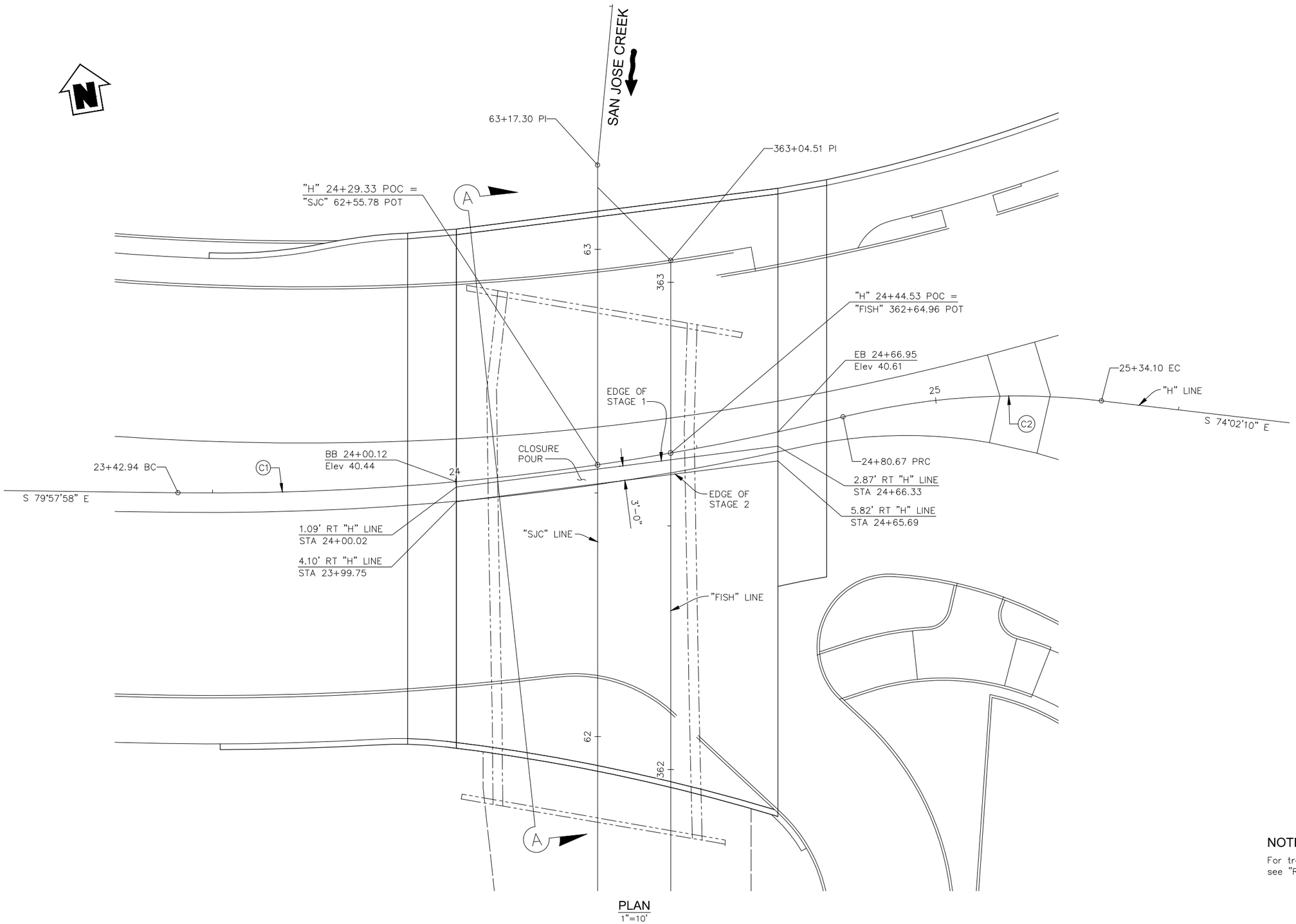

PLAN
1"=10'

NOTE:

For traffic handling and information not shown, see "Road Plans".

65% PLANS - NOT FOR CONSTRUCTION

USERNAME => kdresbach DATE PLOTTED => Jun 25, 2014 TIME PLOTTED => 12:41 pm

DESIGN OVERSIGHT	DESIGN	BY M. Burgard	CHECKED J. Elmensdorp	LOAD & RESISTANCE FACTOR DESIGN	LIVE LOADING: HL93 W/ "LOW-BOY" AND PERMIT DESIGN VEHICLE
	DETAILS	BY A. Barba	CHECKED X	LAYOUT BY X	CHECKED X
SIGN OFF DATE	QUANTITIES	BY X	CHECKED X	SPECIFICATIONS BY X	PLANS AND SPECS COMPARED X

STRUCTURES DESIGN GENERAL PLAN SHEET (ENGLISH) (REV. 10/25/05)

ORIGINAL SCALE IN INCHES FOR REDUCED PLANS 0 1 2 3

PREPARED FOR THE
CITY OF GOLETA
DEPARTMENT OF PUBLIC WORKS

PROJECT ENGINEER
CU
EA

BRIDGE NO. X
POST MILE X

HOLLISTER AVE BRIDGE OVER SAN JOSE CREEK

STAGE CONSTRUCTION LAYOUT

DISREGARD PRINTS BEARING EARLIER REVISION DATES → X/X/X

REVISION DATES

SHEET 4 OF X

STRUCTURES DESIGN GENERAL PLAN SHEET (ENGLISH) (REV.07-24-06)

FILE => U:\12036 – Hollister Bridge Project – City of Goleta\400 Project Design Files\430 Bridges & Structures\Submittal 65%\Plans\HB-S-SCL.dwg

DIST	COUNTY	ROUTE	POST MILES TOTAL PROJECT	SHEET No	TOTAL SHEETS
5	SB	X		X	X

REGISTERED CIVIL ENGINEER — DATE X

PLANS APPROVAL DATE

REGISTERED PROFESSIONAL ENGINEER X No. X Exp. X CIVIL STATE OF CALIFORNIA

DRAKE HAGLAN AND ASSOCIATES OR ITS OFFICERS OR AGENTS SHALL NOT BE RESPONSIBLE FOR THE ACCURACY OR COMPLETENESS OF ELECTRONIC COPIES OF THIS PLAN SHEET.

drake haglan AND ASSOCIATES
11060 White Rock Road, Suite 200
Rancho Cordova, CA 95670

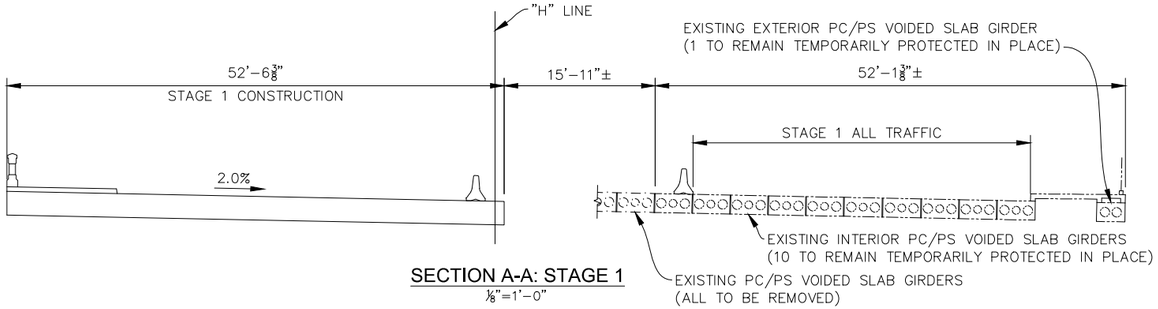

SECTION A-A: STAGE 1
1/8"=1'-0"

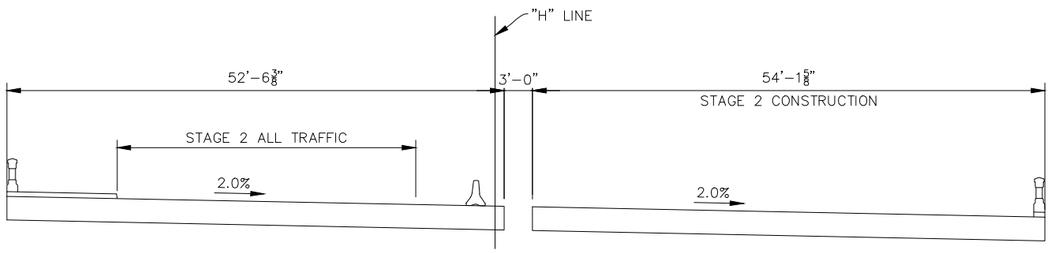

SECTION A-A: STAGE 2
1/8"=1'-0"

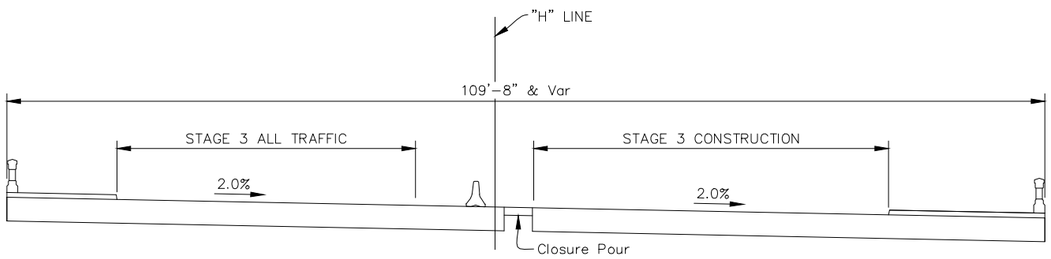

SECTION A-A: STAGE 3
1/8"=1'-0"

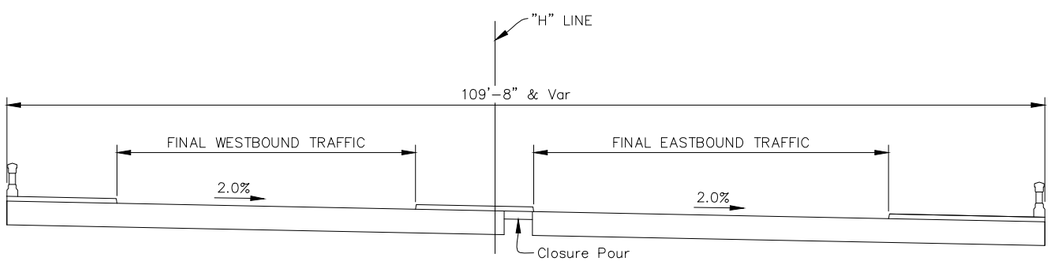

SECTION A-A: STAGE 4
1/8"=1'-0"

LEGEND:

(1) Temporary Railing Type K

Indicates Structures completed in a previous stage

Indicates Existing Bridge be removed

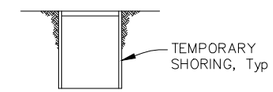

1. Excavate abutment trench and install temporary shoring.

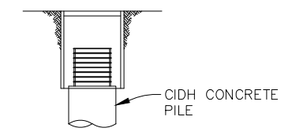

2. Construct CIDH concrete piles.

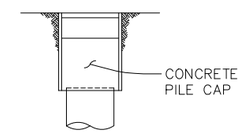

3. Construct concrete pile cap.

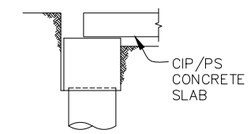

4. Excavate, remove portions of the temporary abutment shoring, place CIP/PS concrete slab for Stage 1 or Stage 2.

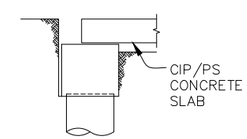

5. Prestress CIP/PS concrete slab.

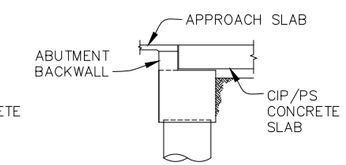

6. Remove, temporary shoring as necessary, construct abutment backwall, backfill behind backwall and place structure approach.

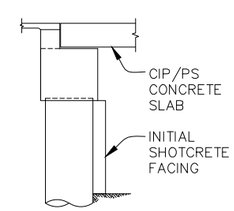

7. Excavate below bridge, drill and bond dowels into CIDH piles, and construct shotcrete wall lifts.

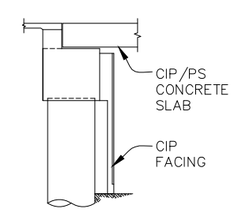

8. Construct CIP facing and perform channel work.

CONSTRUCTION SEQUENCE
NO SCALE

NOTE:
For traffic handling and information not shown, see "Road Plans".

NOTE:
THE CONTRACTOR SHALL VERIFY ALL CONTROLLING FIELD DIMENSIONS BEFORE ORDERING OR FABRICATING ANY MATERIAL.

65% PLANS - NOT FOR CONSTRUCTION

kdresbach DATE PLOTTED => Jun 25, 2014 TIME PLOTTED => 12:42 pm

DESIGN	BY M. Burgard	CHECKED J. Elmensdorp	
DETAILS	BY ~~K. Boesbach~~	CHECKED X	
QUANTITIES	BY X	CHECKED X	

DESIGN OVERSIGHT

SIGN OFF DATE

PREPARED FOR THE
CITY OF GOLETA
DEPARTMENT OF PUBLIC WORKS

X
PROJECT ENGINEER

BRIDGE NO. X
POST MILE X

HOLLISTER AVE BRIDGE OVER SAN JOSE CREEK

STAGED CONSTRUCTION DETAILS

ORIGINAL SCALE IN INCHES FOR REDUCED PLANS 0 1 2 3

CU
EA

DISREGARD PRINTS BEARING EARLIER REVISION DATES X/X/X

REVISION DATES | SHEET 5 | OF X

FILE => U:\12036 – Hollister Bridge Project – City of Goleta\400 Project Design Files\430 Bridges & Structures\Submittal 65%\Plans\HB-S-SCD.dwg

STRUCTURES DESIGN GENERAL PLAN SHEET (ENGLISH) (REV.07-24-06)

DIST	COUNTY	ROUTE	POST MILES TOTAL PROJECT	SHEET No	TOTAL SHEETS
5	SB	X		X	X

REGISTERED CIVIL ENGINEER X DATE

PLANS APPROVAL DATE

REGISTERED PROFESSIONAL ENGINEER X No. X Exp. X CIVIL STATE OF CALIFORNIA

DRAKE HAGLAN AND ASSOCIATES OR ITS OFFICERS OR AGENTS SHALL NOT BE RESPONSIBLE FOR THE ACCURACY OR COMPLETENESS OF ELECTRONIC COPIES OF THIS PLAN SHEET.

drake haglan AND ASSOCIATES
11060 White Rock Road, Suite 200
Rancho Cordova, CA 95670

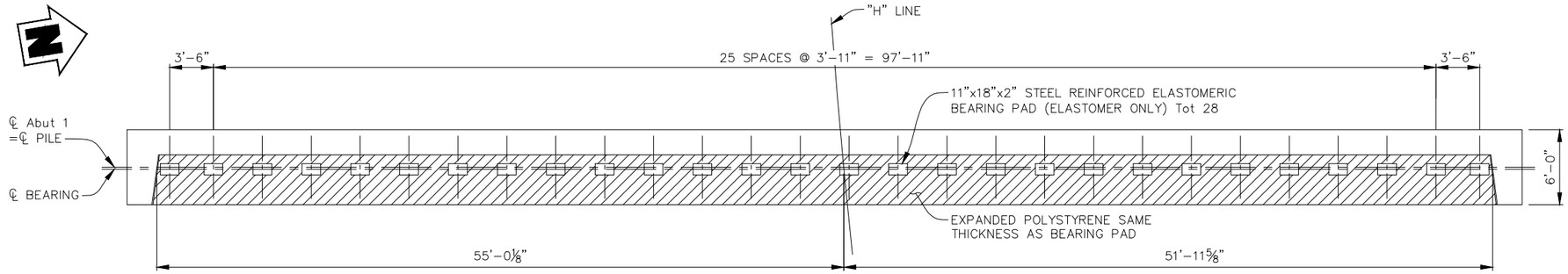

PLAN
3/16" = 1'-0"

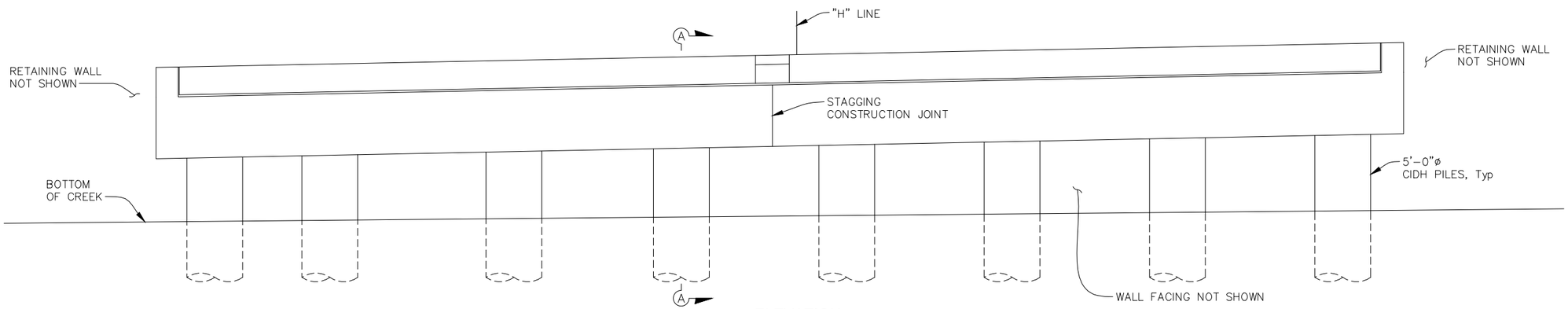

ELEVATION
3/16" = 1'-0"

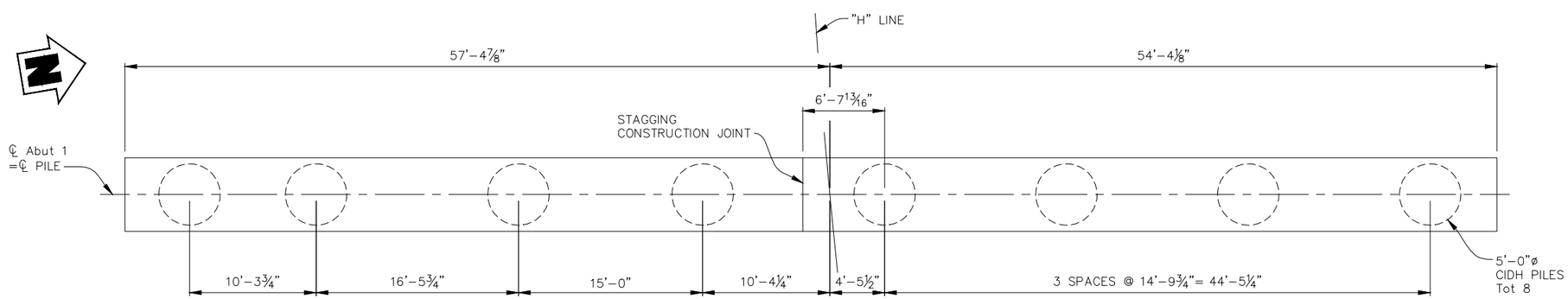

PILE CAP PLAN
3/16" = 1'-0"

NOTE:
For "SECTION A–A", see "ABUTMENT DETAILS NO. 1" sheet.

NOTE:
THE CONTRACTOR SHALL VERIFY ALL CONTROLLING FIELD DIMENSIONS BEFORE ORDERING OR FABRICATING ANY MATERIAL.

65% PLANS - NOT FOR CONSTRUCTION

kdresbach DATE PLOTTED => Jun 25, 2014 TIME PLOTTED => 12:42 pm

DESIGN OVERSIGHT	DESIGN	BY M. Burgard	CHECKED J. Elmensdorp
SIGN OFF DATE	DETAILS	BY K. Baesbach	CHECKED X
	QUANTITIES	BY X	CHECKED X

PREPARED FOR THE
CITY OF GOLETA
DEPARTMENT OF PUBLIC WORKS

X
PROJECT ENGINEER

BRIDGE NO. X
POST MILE X

HOLLISTER AVE BRIDGE OVER SAN JOSE CREEK

ABUTMENT 1 LAYOUT

ORIGINAL SCALE IN INCHES FOR REDUCED PLANS 0 1 2 3

CU
EA

DISREGARD PRINTS BEARING EARLIER REVISION DATES X/X/X

REVISION DATES

SHEET 6 OF X

FILE => U:\12036 – Hollister Bridge Project – City of Goleta\400 Project Design Files\430 Bridges & Structures\Submittal 65%\Plans\HB-S-AL.dwg

STRUCTURES DESIGN GENERAL PLAN SHEET (ENGLISH) (REV.07-24-06)

DIST	COUNTY	ROUTE	POST MILES TOTAL PROJECT	SHEET No	TOTAL SHEETS
5	SB	X		X	X

REGISTERED CIVIL ENGINEER X DATE

PLANS APPROVAL DATE

REGISTERED PROFESSIONAL ENGINEER X No. X Exp. X CIVIL STATE OF CALIFORNIA

DRAKE HAGLAN AND ASSOCIATES OR ITS OFFICERS OR AGENTS SHALL NOT BE RESPONSIBLE FOR THE ACCURACY OR COMPLETENESS OF ELECTRONIC COPIES OF THIS PLAN SHEET.

drake haglan AND ASSOCIATES
11060 White Rock Road, Suite 200
Rancho Cordova, CA 95670

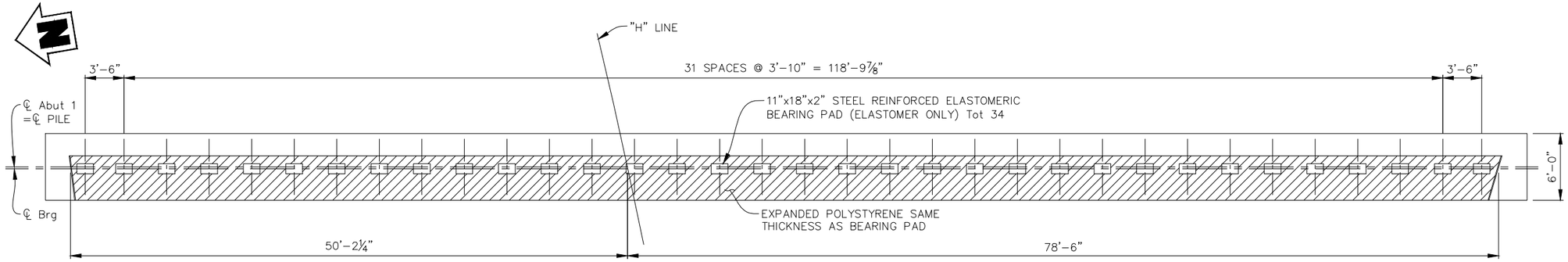

PLAN
3/16" = 1'-0"

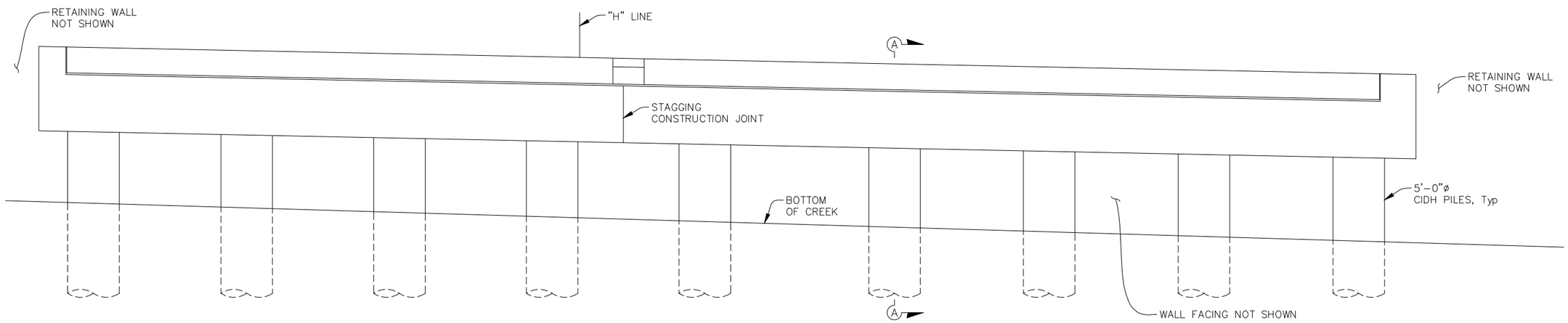

ELEVATION
3/16" = 1'-0"

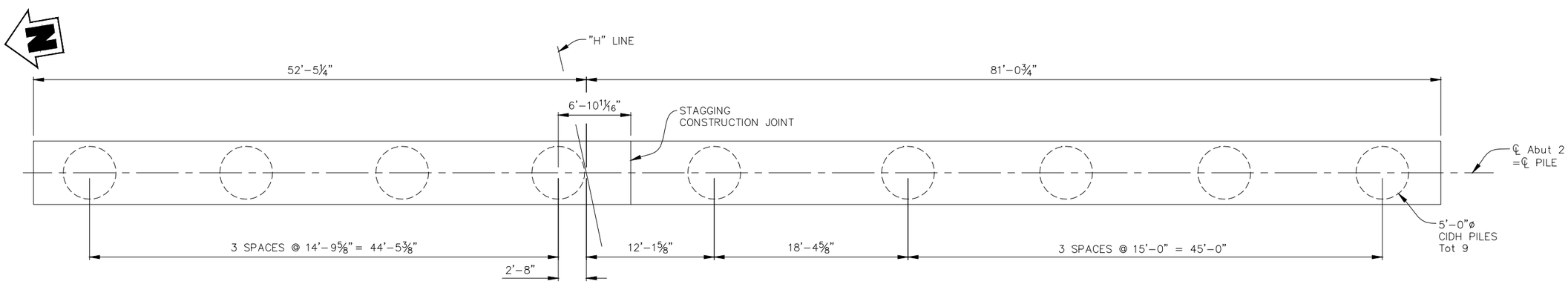

PILE CAP PLAN
3/16" = 1'-0"

NOTE:
For "SECTION A-A", see "ABUTMENT DETAILS NO. 1" sheet.

NOTE:
THE CONTRACTOR SHALL VERIFY ALL CONTROLLING FIELD DIMENSIONS BEFORE ORDERING OR FABRICATING ANY MATERIAL.

65% PLANS - NOT FOR CONSTRUCTION

kdresbach DATE PLOTTED => Jun 25, 2014 TIME PLOTTED => 12:42 pm

DESIGN OVERSIGHT

SIGN OFF DATE

	BY	CHECKED
DESIGN	M. Burgard	J. Elmensdorp
DETAILS	K. Boesbach	X
QUANTITIES	X	X

PREPARED FOR THE
CITY OF GOLETA
DEPARTMENT OF PUBLIC WORKS

X
PROJECT ENGINEER

BRIDGE NO. X
POST MILE X

HOLLISTER AVE BRIDGE OVER SAN JOSE CREEK

ABUTMENT 2 LAYOUT

ORIGINAL SCALE IN INCHES FOR REDUCED PLANS 0 1 2 3

CU
EA

DISREGARD PRINTS BEARING EARLIER REVISION DATES

REVISION DATES X/X/X

SHEET 7 OF X

FILE => U:\12036 – Hollister Bridge Project – City of Goleta\400 Project Design Files\430 Bridges & Structures\Submittal 65%\Plans\HB-S-AL.dwg

STRUCTURES DESIGN GENERAL PLAN SHEET (ENGLISH) (REV.07-24-06)

DIST	COUNTY	ROUTE	POST MILES TOTAL PROJECT	SHEET No	TOTAL SHEETS
5	SB	X		X	X

REGISTERED CIVIL ENGINEER — DATE X

PLANS APPROVAL DATE

REGISTERED PROFESSIONAL ENGINEER X No. X Exp. X CIVIL STATE OF CALIFORNIA

DRAKE HAGLAN AND ASSOCIATES OR ITS OFFICERS OR AGENTS SHALL NOT BE RESPONSIBLE FOR THE ACCURACY OR COMPLETENESS OF ELECTRONIC COPIES OF THIS PLAN SHEET.

drake haglan AND ASSOCIATES
11060 White Rock Road, Suite 200
Rancho Cordova, CA 95670

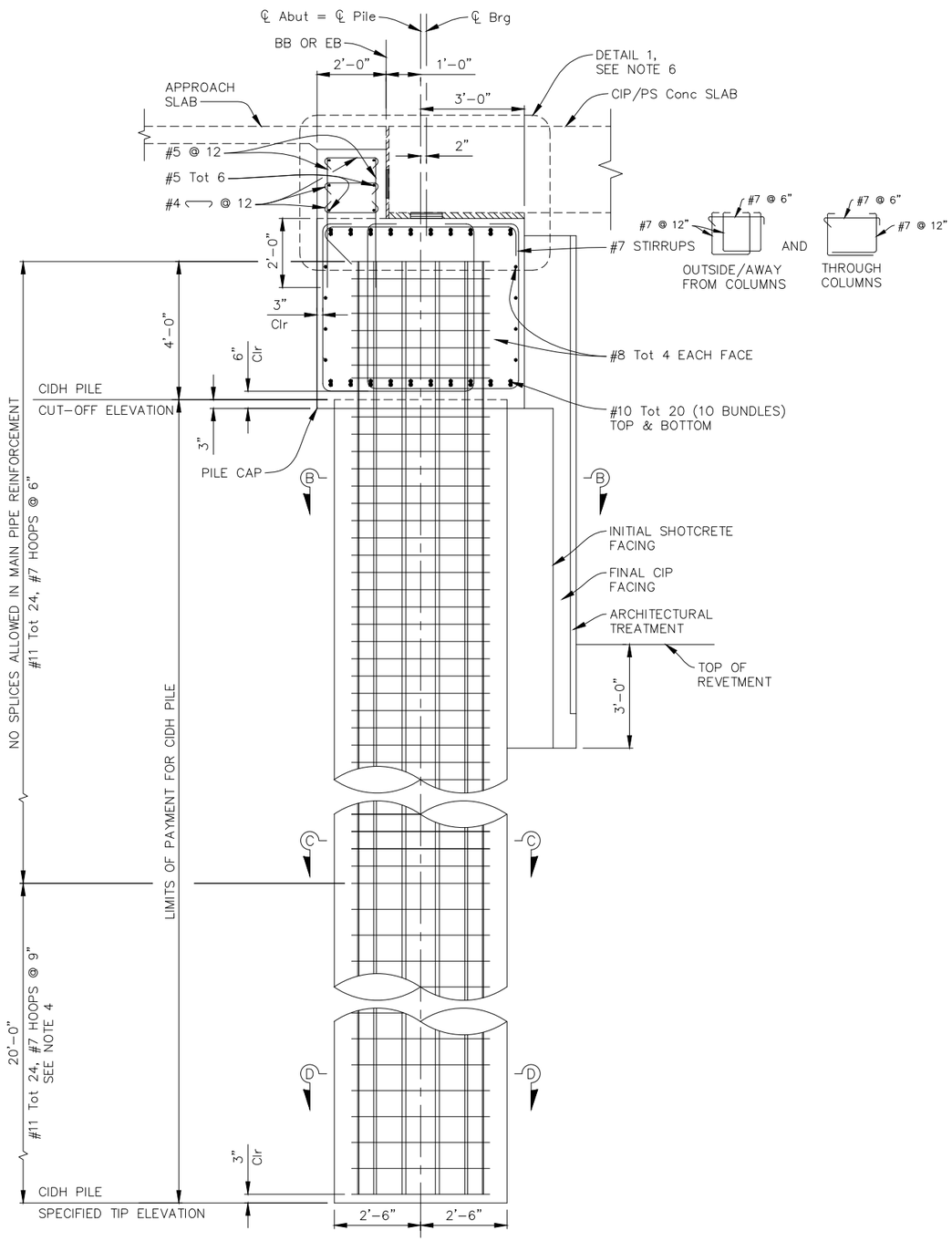

SECTION A-A
½" = 1'-0"

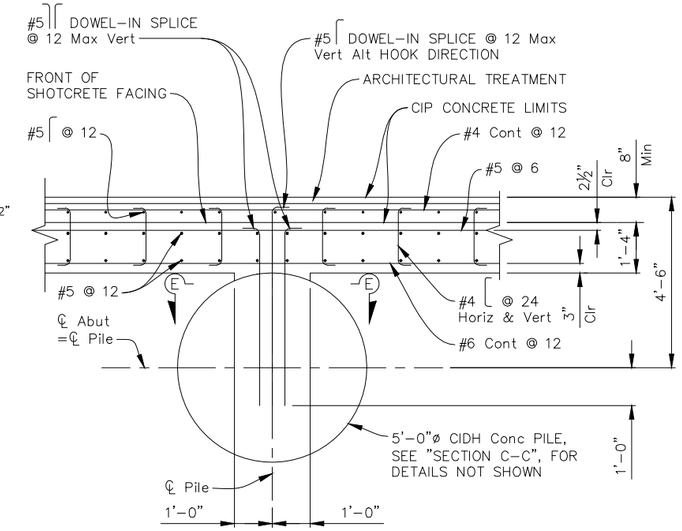

SECTION B-B
½" = 1'-0"

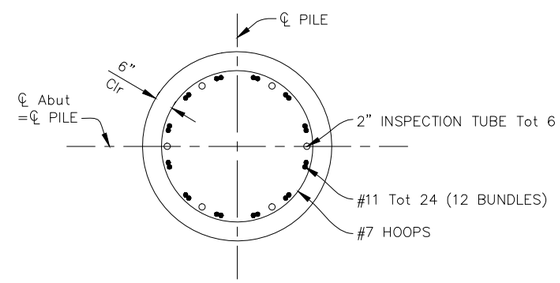

SECTION C-C
½" = 1'-0"

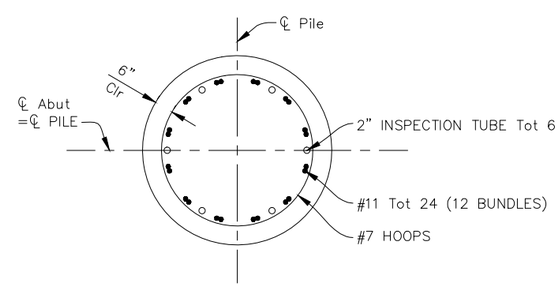

SECTION D-D
½" = 1'-0"

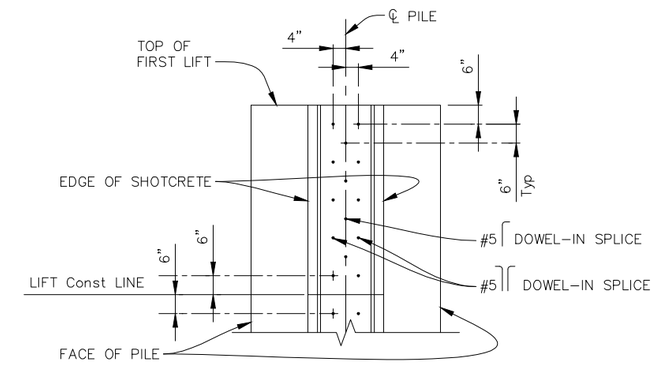

SECTION E-E
½" = 1'-0"

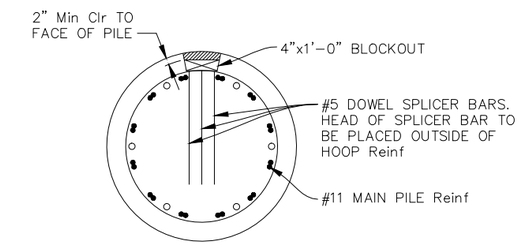

PILE CONSTRUCTION DETAIL
½" = 1'-0"

NOTES:

1. For Pile Cut-Off and Specified Tip Elevations, see "PILE DATA" on "FOUNDATION PLAN" sheet.
2. Abutment 1 shown, Abutment 2 similar.
3. All hoops shall be "Ultimate" butt spliced.
4. CIDH main reinforcement splices within this zone shall be staggered "Ultimate" butt splices.
5. Pile Cap main Reinf splices shall be staggered "Servise" butt splices.
6. For "DETAIL 1", see "ABUTMENT DETAILS NO. 2" sheet.

NOTE:
THE CONTRACTOR SHALL VERIFY ALL CONTROLLING FIELD DIMENSIONS BEFORE ORDERING OR FABRICATING ANY MATERIAL.

65% PLANS - NOT FOR CONSTRUCTION

kdresbach DATE PLOTTED => Jun 25, 2014 TIME PLOTTED => 12:42 pm

DESIGN OVERSIGHT

SIGN OFF DATE

	BY	CHECKED
DESIGN	M. Burgard	J. Elmensdorp
DETAILS	A. Barba	X
QUANTITIES	X	X

PREPARED FOR THE **CITY OF GOLETA** DEPARTMENT OF PUBLIC WORKS

X PROJECT ENGINEER

BRIDGE NO. X

POST MILE X

HOLLISTER AVE BRIDGE OVER SAN JOSE CREEK

ABUTMENT DETAILS NO. 1

ORIGINAL SCALE IN INCHES FOR REDUCED PLANS 0 1 2 3

CU EA

DISREGARD PRINTS BEARING EARLIER REVISION DATES X/X/X

REVISION DATES | SHEET 8 | OF X

FILE => U:\12036 – Hollister Bridge Project – City of Goleta\400 Project Design Files\430 Bridges & Structures\Submittal 65%\Plans\HB-S-AD.dwg

STRUCTURES DESIGN GENERAL PLAN SHEET (ENGLISH) (REV.07-24-06)

DIST	COUNTY	ROUTE	POST MILES TOTAL PROJECT	SHEET No	TOTAL SHEETS
5	SB	X		X	X

REGISTERED CIVIL ENGINEER — DATE X

PLANS APPROVAL DATE

REGISTERED PROFESSIONAL ENGINEER — No. X — Exp. X — CIVIL — STATE OF CALIFORNIA

DRAKE HAGLAN AND ASSOCIATES OR ITS OFFICERS OR AGENTS SHALL NOT BE RESPONSIBLE FOR THE ACCURACY OR COMPLETENESS OF ELECTRONIC COPIES OF THIS PLAN SHEET.

drake haglan AND ASSOCIATES
11060 White Rock Road, Suite 200
Rancho Cordova, CA 95670

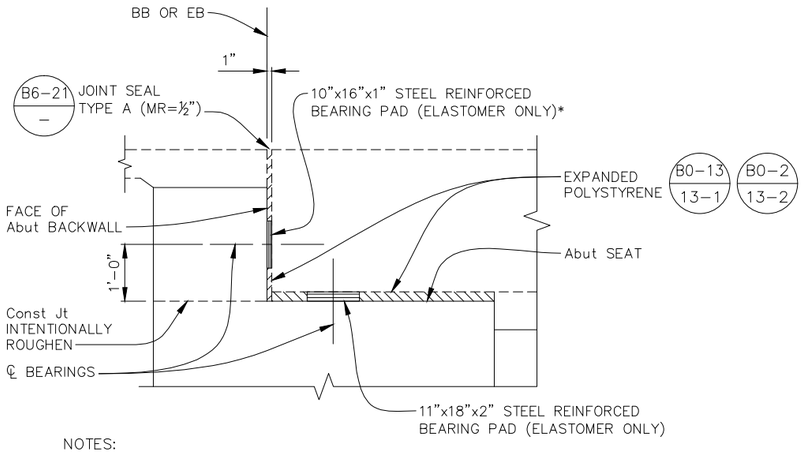

NOTES:
* Horizontal clear spacing between bearing pads shall not exceed 10'-0" max or be less than 5'-0" min. Clear distance between edge of pad and vertical concrete face shall not be less than 3" min at ends. Epoxy bearing pads to CIP/PS slab before placing backwall.

ABUTMENT	TOTAL
1	14
2	16

DETAIL 1
¾" = 1'-0"

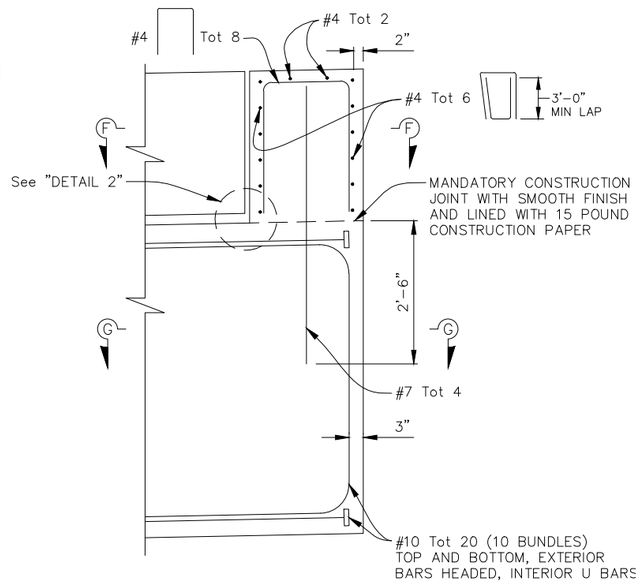

WEST ABUT SHEAR KEY DETAIL
¾" = 1'-0"

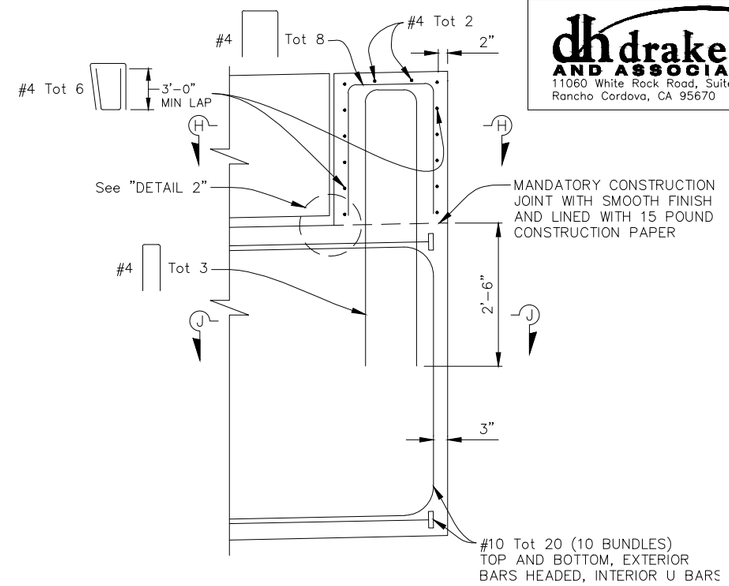

EAST ABUT SHEAR KEY DETAIL
¾" = 1'-0"

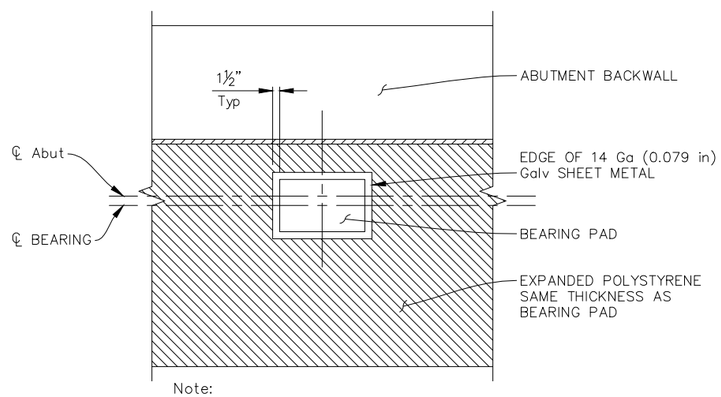

Note:
Coat top of bearing pad with silicone grease prior to placing sheet metal

BEARING PAD DETAIL
¾" = 1'-0"

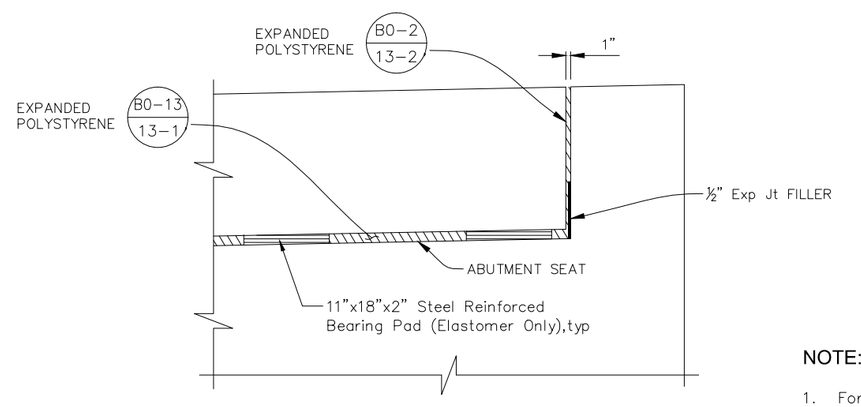

DETAIL 2
¾" = 1'-0"

NOTE:

1. For "SECTION F–F", "SECTION G–G", "SECTION H–H" and "SECTION J–J", see "ABUTMENT DETAILS NO. 3". sheet

NOTE:
THE CONTRACTOR SHALL VERIFY ALL CONTROLLING FIELD DIMENSIONS BEFORE ORDERING OR FABRICATING ANY MATERIAL.

65% PLANS - NOT FOR CONSTRUCTION

kdresbach DATE PLOTTED => Jun 25, 2014 TIME PLOTTED => 12:43 pm

DESIGN OVERSIGHT	DESIGN	BY M. Burgard	CHECKED J. Elmensdorp
SIGN OFF DATE	DETAILS	BY A. Barba	CHECKED X
	QUANTITIES	BY X	CHECKED X

PREPARED FOR THE **CITY OF GOLETA** DEPARTMENT OF PUBLIC WORKS

X PROJECT ENGINEER

BRIDGE NO. X — POST MILE X

HOLLISTER AVE BRIDGE OVER SAN JOSE CREEK
ABUTMENT DETAILS NO. 2

ORIGINAL SCALE IN INCHES FOR REDUCED PLANS 0 1 2 3

CU EA

DISREGARD PRINTS BEARING EARLIER REVISION DATES X/X/X

REVISION DATES — SHEET 9 OF X

FILE => U:\12036 – Hollister Bridge Project – City of Goleta\400 Project Design Files\430 Bridges & Structures\Submittal 65%\Plans\HB-S-AD.dwg

STRUCTURES DESIGN GENERAL PLAN SHEET (ENGLISH) (REV.07-24-06)

DIST	COUNTY	ROUTE	POST MILES TOTAL PROJECT	SHEET No	TOTAL SHEETS
5	SB	X		X	X

REGISTERED CIVIL ENGINEER X DATE

PLANS APPROVAL DATE

REGISTERED PROFESSIONAL ENGINEER X No. X Exp. X CIVIL STATE OF CALIFORNIA

DRAKE HAGLAN AND ASSOCIATES OR ITS OFFICERS OR AGENTS SHALL NOT BE RESPONSIBLE FOR THE ACCURACY OR COMPLETENESS OF ELECTRONIC COPIES OF THIS PLAN SHEET.

drake haglan AND ASSOCIATES
11060 White Rock Road, Suite 200
Rancho Cordova, CA 95670

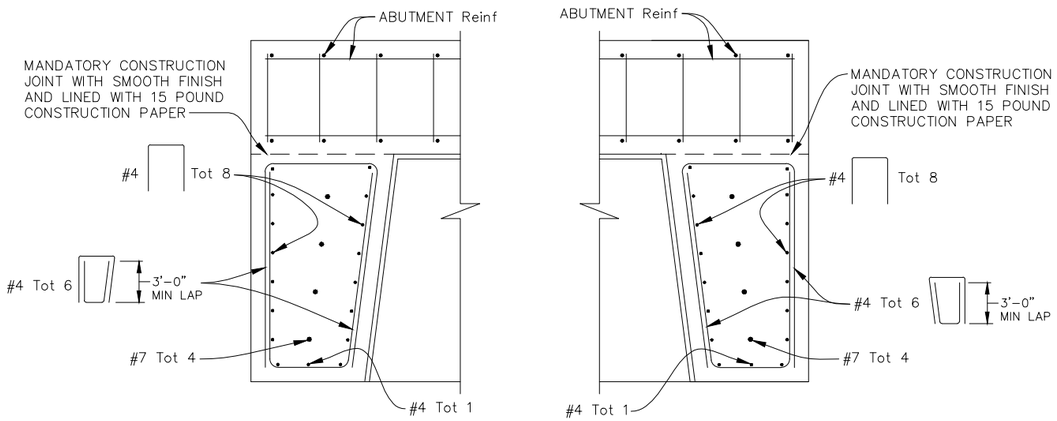

SECTION F-F
¾" = 1'-0"

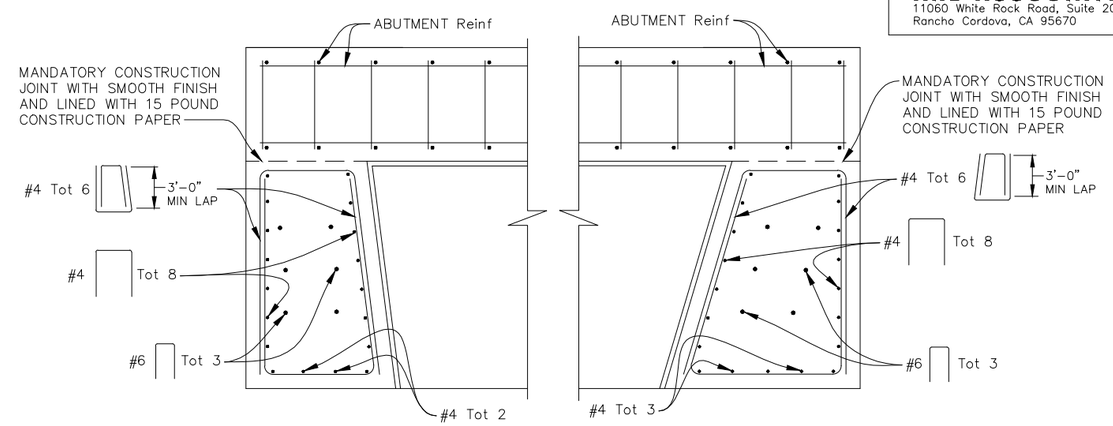

SECTION H-H
¾" = 1'-0"

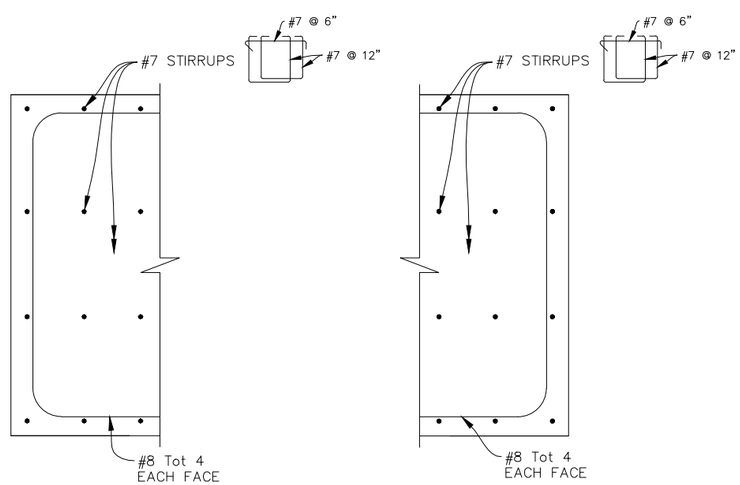

SECTION G-G
¾" = 1'-0"

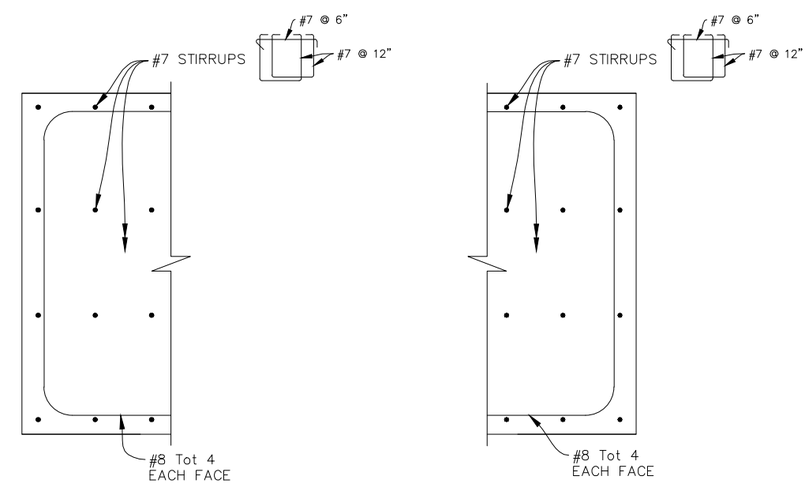

SECTION J-J
¾" = 1'-0"

NOTE:
THE CONTRACTOR SHALL VERIFY ALL CONTROLLING FIELD DIMENSIONS BEFORE ORDERING OR FABRICATING ANY MATERIAL.

65% PLANS - NOT FOR CONSTRUCTION

kdresbach DATE PLOTTED => Jun 25, 2014 TIME PLOTTED => 12:44 pm

DESIGN	BY M. Burgard	CHECKED J. Elmensdorp	
DETAILS	BY K. Dresbach	CHECKED X	
QUANTITIES	BY X	CHECKED X	

DESIGN OVERSIGHT

SIGN OFF DATE

ORIGINAL SCALE IN INCHES FOR REDUCED PLANS 0 1 2 3

PREPARED FOR THE
CITY OF GOLETA
DEPARTMENT OF PUBLIC WORKS

X
PROJECT ENGINEER

CU
EA

BRIDGE NO. X
POST MILE X

HOLLISTER AVE BRIDGE OVER SAN JOSE CREEK

ABUTMENT DETAILS NO. 3

DISREGARD PRINTS BEARING EARLIER REVISION DATES → X/X/X

REVISION DATES | SHEET 10 | OF X

FILE => U:\12036 – Hollister Bridge Project – City of Goleta\400 Project Design Files\430 Bridges & Structures\Submittal 65%\Plans\HB-S-AD3.dwg

STRUCTURES DESIGN GENERAL PLAN SHEET (ENGLISH) (REV.07-24-06)

DIST	COUNTY	ROUTE	POST MILES TOTAL PROJECT	SHEET No	TOTAL SHEETS
5	SB	X		X	X

REGISTERED CIVIL ENGINEER X DATE

PLANS APPROVAL DATE

REGISTERED PROFESSIONAL ENGINEER X No. X Exp. X CIVIL STATE OF CALIFORNIA

DRAKE HAGLAN AND ASSOCIATES OR ITS OFFICERS OR AGENTS SHALL NOT BE RESPONSIBLE FOR THE ACCURACY OR COMPLETENESS OF ELECTRONIC COPIES OF THIS PLAN SHEET.

drake haglan AND ASSOCIATES
11060 White Rock Road, Suite 200
Rancho Cordova, CA 95670

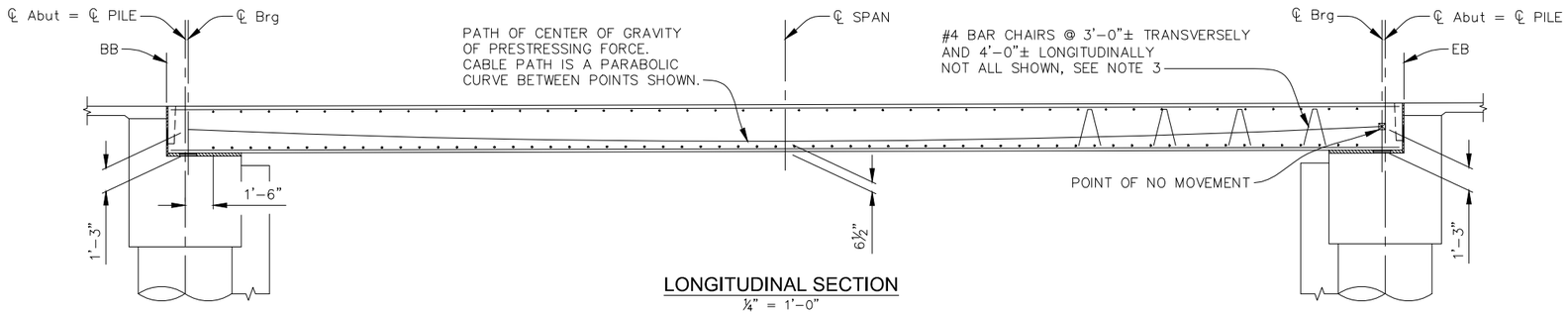

LONGITUDINAL SECTION
¼" = 1'-0"

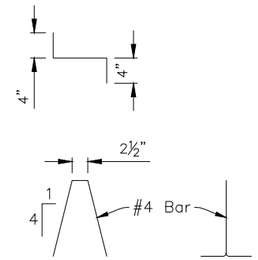

BAR CHAIR DETAIL
1" = 1'-0"

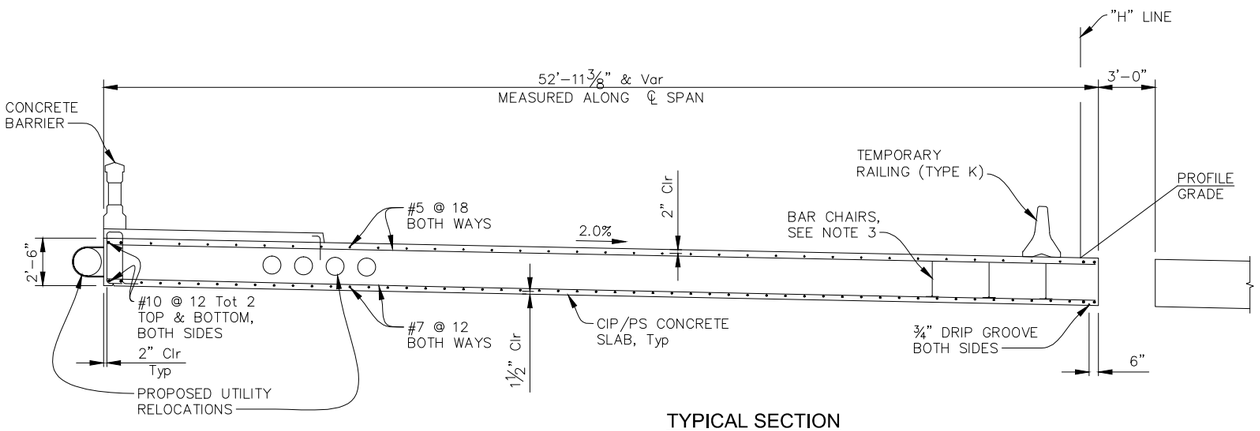

TYPICAL SECTION
¼" = 1'-0"

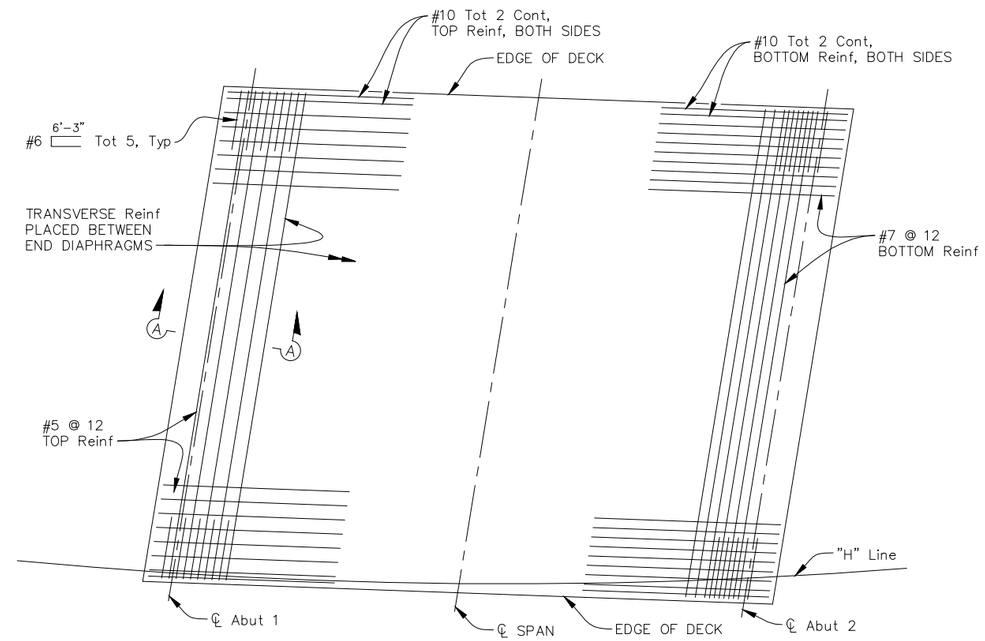

DECK PLAN
NO SCALE

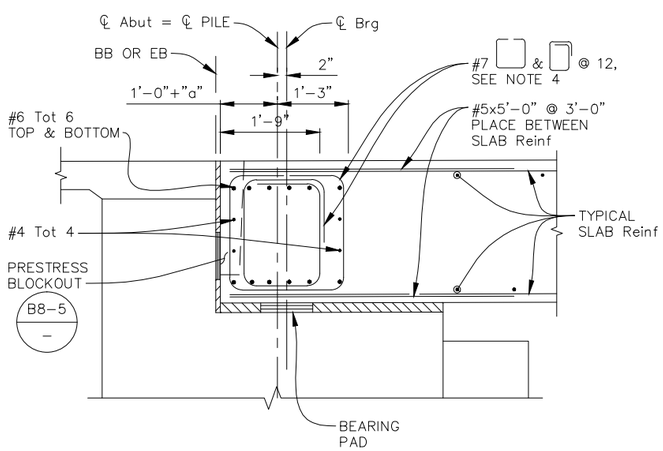

SECTION A-A
¾" = 1'-0"

NOTE:
THE CONTRACTOR SHALL VERIFY ALL CONTROLLING FIELD DIMENSIONS BEFORE ORDERING OR FABRICATING ANY MATERIAL.

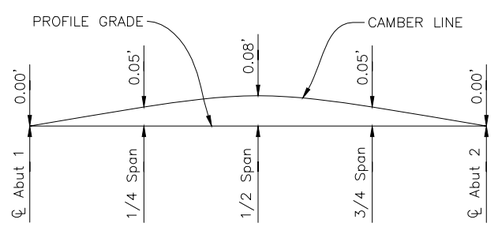

NOTE:
Camber Diagram does not include allowances for falsework settlement

CAMBER DIAGRAGM
NO SCALE

PRESTRESSING NOTES

270 ksi Low Relaxation Strand:

Pjack = 18,280 kips
Anchor set = 3/8"

Design is based on μ=0.15 and k=0.0002/ft

Prestress force (Pjack) shall be uniformally distributed across the slab.

Concrete f'c = 5,000 psi @ 28 days
f'ci = 3,500 psi

Contractor shall submit elongation calculations based on initial stress at

☒ = 0.975 x Jacking stress

One end stressing shall be performed from Abut 1 end only

Horizontal clear spacing between prestress anchorages shall not exceed 42" max or be less than 6" min. Minimum edge distance shall be 15" to ℄ duct. Edge distance of anchorages shall be 1½" min. Spacing may be adjusted to fit utilities

For additional notes and details, see B8-5 –

NOTES:

1. Stirrups can be adjusted to clear prestressed anchorage.
2. Bar chairs my be used to secure prestress ducts. Spacing will need to be adjusted to coincide with duct locations.
3. Bars and prestressing ducts shall be placed parallel to and spaced normal to the edge of deck.
4. For ℄ Span alignment, see "STAGGED CONSTRUCTION LAYOUT" sheet.

65% PLANS - NOT FOR CONSTRUCTION

kdresbach DATE PLOTTED => Jun 25, 2014 TIME PLOTTED => 12:45 pm

DESIGN OVERSIGHT

SIGN OFF DATE

	BY	CHECKED
DESIGN	M. Burgard	J. Elmensdorp
DETAILS	K. Boesbach	X
QUANTITIES	X	X

PREPARED FOR THE
CITY OF GOLETA
DEPARTMENT OF PUBLIC WORKS

X
PROJECT ENGINEER

BRIDGE NO. X
POST MILE X

HOLLISTER AVE BRIDGE OVER SAN JOSE CREEK

TYPICAL SECTION STAGE 1

ORIGINAL SCALE IN INCHES FOR REDUCED PLANS 0 1 2 3

CU
EA

DISREGARD PRINTS BEARING EARLIER REVISION DATES

REVISION DATES X/X/X

SHEET 11 OF X

FILE => U:\12036 – Hollister Bridge Project – City of Goleta\400 Project Design Files\430 Bridges & Structures\Submittal 65%\Plans\HB-S-TS.dwg

STRUCTURES DESIGN GENERAL PLAN SHEET (ENGLISH) (REV.07-24-06)

DIST	COUNTY	ROUTE	POST MILES TOTAL PROJECT	SHEET No	TOTAL SHEETS
5	SB	X		X	X

REGISTERED CIVIL ENGINEER X DATE

PLANS APPROVAL DATE

REGISTERED PROFESSIONAL ENGINEER X No. X Exp. X CIVIL STATE OF CALIFORNIA

DRAKE HAGLAN AND ASSOCIATES OR ITS OFFICERS OR AGENTS SHALL NOT BE RESPONSIBLE FOR THE ACCURACY OR COMPLETENESS OF ELECTRONIC COPIES OF THIS PLAN SHEET.

drake haglan AND ASSOCIATES
11060 White Rock Road, Suite 200
Rancho Cordova, CA 95670

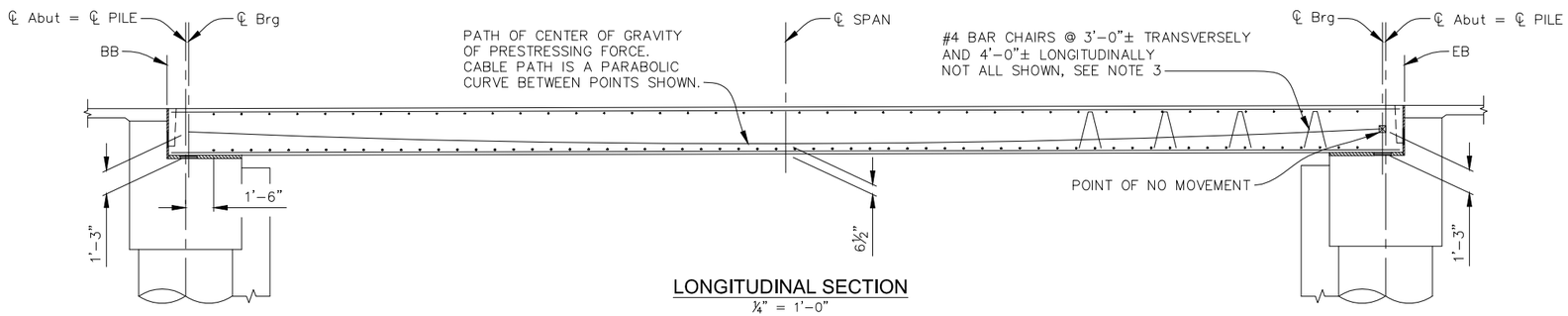

LONGITUDINAL SECTION
¼" = 1'-0"

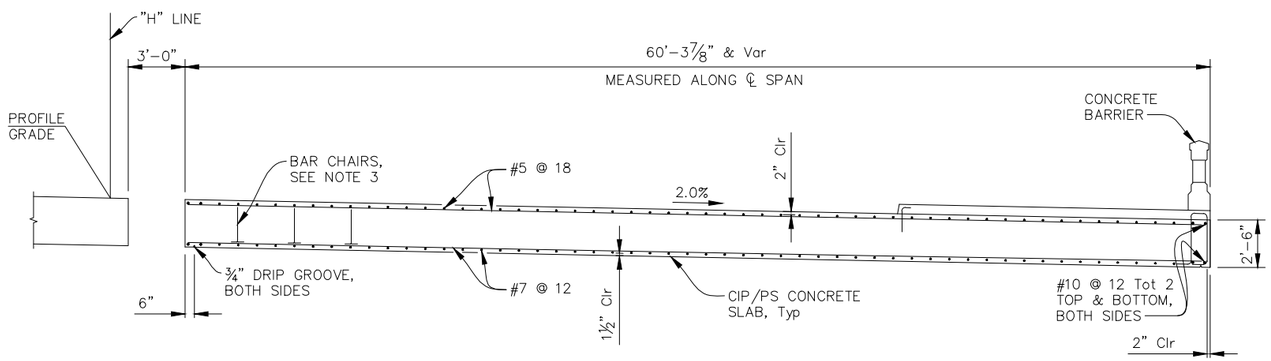

TYPICAL SECTION
¼" = 1'-0"

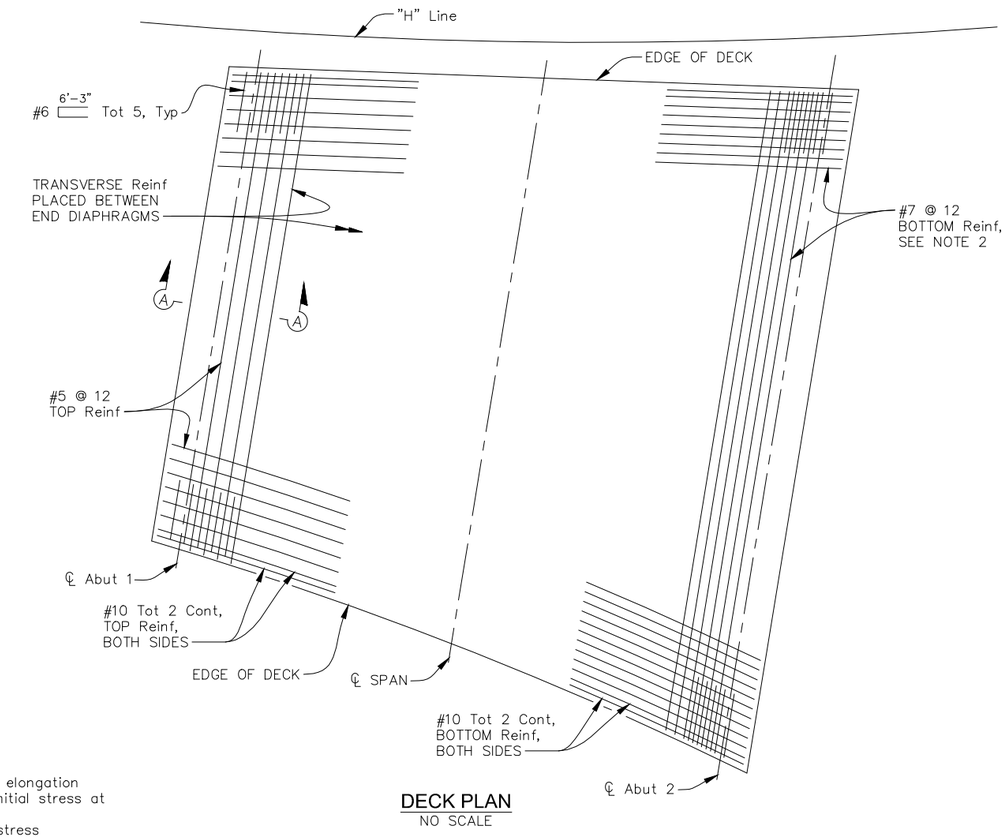

DECK PLAN
NO SCALE

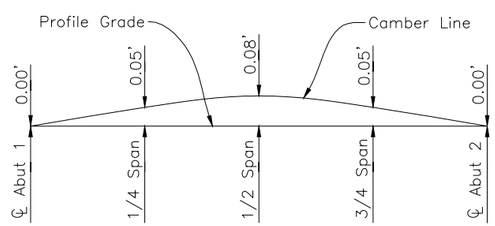

NOTE:
Camber Diagram does not include allowances for falsework settlement

CAMBER DIAGRAGM
NO SCALE

PRESTRESSING NOTES

270 ksi Low Relaxation Strand:

Pjack = 21,606 kips
Anchor set = 3/8"

Design is based on μ=0.15 and k=0.0002/ft

Prestress force (Pjack) shall be uniformally distributed across the slab.

Concrete f'c = 5,000 psi @ 28 days
f'ci = 3,500 psi

Contractor shall submit elongation calculations based on initial stress at

☒ = 0.975 x Jacking stress

One end stressing shall be performed from Abut 1 end only

Horizontal clear spacing between prestress anchorages shall not exceed 42" max or be less than 6" min. Minimum edge distance shall be 15" to ℄ duct. Edge distance of anchorages shall be 1½" min.

For additional notes and details, see B8-5 / –

NOTES:

1. Stirrups can be adjusted to clear prestressed anchorage.
2. For "SECTION A–A", see "TYPICAL SECTION STAGE 1" sheet.
3. Bar chairs my be used to secure prestress ducts. Spacing will need to be adjusted to coincide with duct locations.
4. Bars and prestressing ducts shall be placed parallel to and spaced normal to the edge of deck on the north side.
5. For ℄ Span alignment, see "STAGGED CONSTRUCTION LAYOUT" sheet.

NOTE:
THE CONTRACTOR SHALL VERIFY ALL CONTROLLING FIELD DIMENSIONS BEFORE ORDERING OR FABRICATING ANY MATERIAL.

65% PLANS - NOT FOR CONSTRUCTION

kdresbach DATE PLOTTED => Jun 25, 2014 TIME PLOTTED => 12:45 pm

DESIGN OVERSIGHT	DESIGN	BY M. Burgard	CHECKED J. Elmensdorp
SIGN OFF DATE	DETAILS	BY K. Doesbach	CHECKED X
	QUANTITIES	BY X	CHECKED X

ORIGINAL SCALE IN INCHES FOR REDUCED PLANS 0 1 2 3

PREPARED FOR THE
CITY OF GOLETA
DEPARTMENT OF PUBLIC WORKS

X
PROJECT ENGINEER

CU
EA

BRIDGE NO. X
POST MILE X

HOLLISTER AVE BRIDGE OVER SAN JOSE CREEK
TYPICAL SECTION STAGE 2

DISREGARD PRINTS BEARING EARLIER REVISION DATES → X/X/X

REVISION DATES | SHEET 12 | OF X

FILE => U:\12036 – Hollister Bridge Project – City of Goleta\400 Project Design Files\430 Bridges & Structures\Submittal 65%\Plans\HB-S-TS.dwg

STRUCTURES DESIGN GENERAL PLAN SHEET (ENGLISH) (REV.07-24-06)

DIST	COUNTY	ROUTE	POST MILES TOTAL PROJECT	SHEET No	TOTAL SHEETS
5	SB	X		X	X

REGISTERED CIVIL ENGINEER — DATE X

PLANS APPROVAL DATE

REGISTERED PROFESSIONAL ENGINEER — No. X — Exp. X — CIVIL — STATE OF CALIFORNIA

DRAKE HAGLAN AND ASSOCIATES OR ITS OFFICERS OR AGENTS SHALL NOT BE RESPONSIBLE FOR THE ACCURACY OR COMPLETENESS OF ELECTRONIC COPIES OF THIS PLAN SHEET.

drake haglan AND ASSOCIATES
11060 White Rock Road, Suite 200
Rancho Cordova, CA 95670

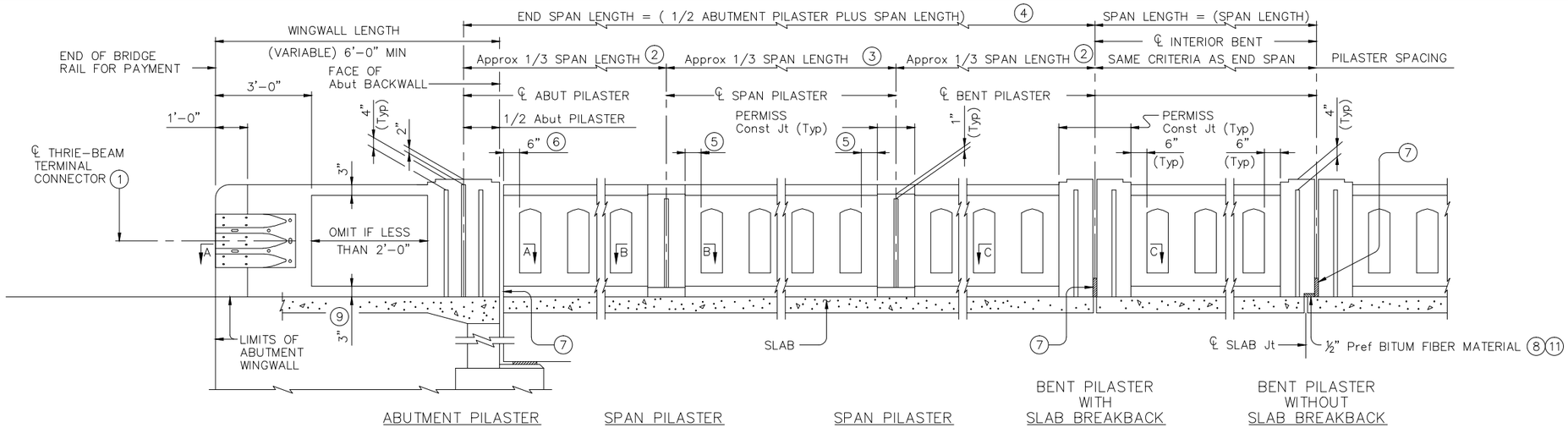

ROADWAY ELEVATION OF RAIL

(SHOWING WITHOUT RAISED SIDEWALK)
NO SCALE

NOTES:

1. Terminal Connectors and associated hardware are to be paid for under the Item "Metal Beam Guard Fence". Metal Beam Guard Fence Transitions must be attached to the bridge rail and extended along the embankment unless otherwise shown in the plans.
2. Number of windows in exterior bays are equal.
3. Number of windows in interior bay(s) are not less than the amount in exterior bays (Note 2).
4. Space Span Pilasters at 1/3 span length (Approx) when spans are 100 ft and less, as shown. Space Span Pilasters at 1/5 span length (Approx) for spans greater than 100 ft.
5. Dimension is the same for all posts adjacent to Span Pilasters in a span. Dimension may vary from span to span, Min = 3", Max = 7½".
6. Min = 6", Max = 1'-3".
7. Provide rail joints at ends of all spans the same width as Slab joint opening, except that Rail Joints over construction joints must be ¼" Min to ¾" Max in width. Joints must be open if slab joint opening is not sealed. Joints over construction joints and over sealed deck joints must be plugged. Forming material used in joints may be left in place if it is light in color and compressible, such as the following materials: polystyrene, molded cork granules, sponge rubber sheet, etc. If forming material is not left in place, the bottom 6" must be plugged with slab joint sealing compound to prevent drainage and staining.
8. Place Preformed Bituminous Fiber Material between slab and rail when rail extends over expansion joint. Shift Bars U as necessary.
9. Increase 2" for structures with overlay.
10. 4 additional Bars WH(#5) 3'-8" in length must be placed inside Bars S(#5) and centered 2'-0" from end of rail when Terminal Connections are required. Field bend as needed.
11. Shift U Bars from region below 1/2" Preformed Bituminous Fiber Material at joints.

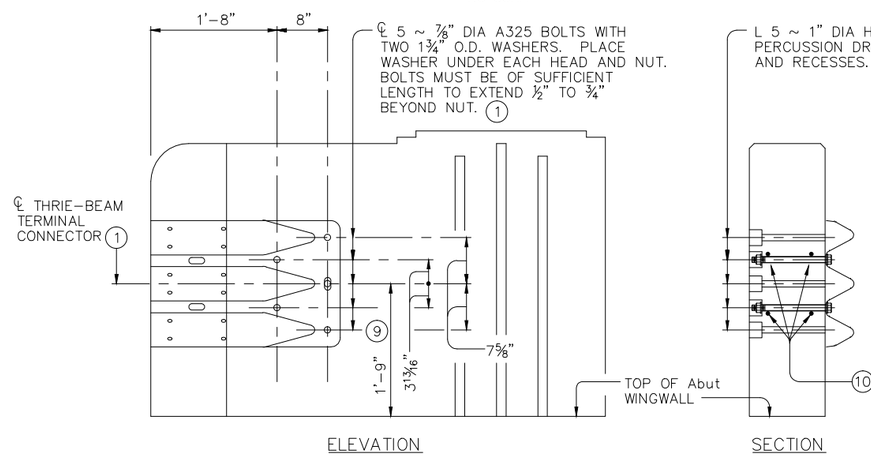

TERMINAL CONNECTION DETAILS

(SHOWING PARAPET WITH PILASTER ON 6'-0" WINGWALL)
NO SCALE

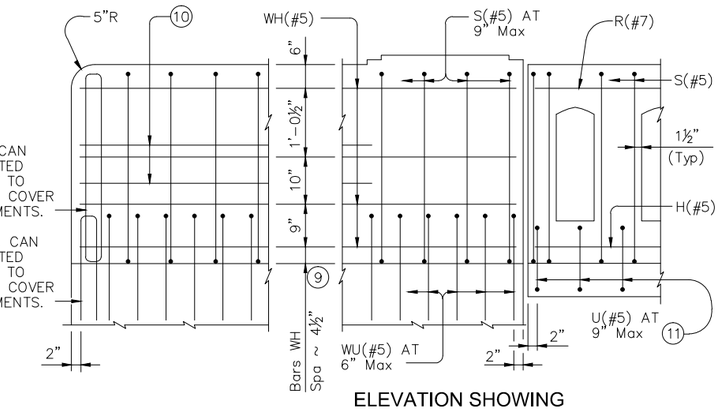

ELEVATION SHOWING TYPICAL REINFORCING PLACEMENT

(SHOWING WITHOUT RAISED SIDEWALK)
NO SCALE

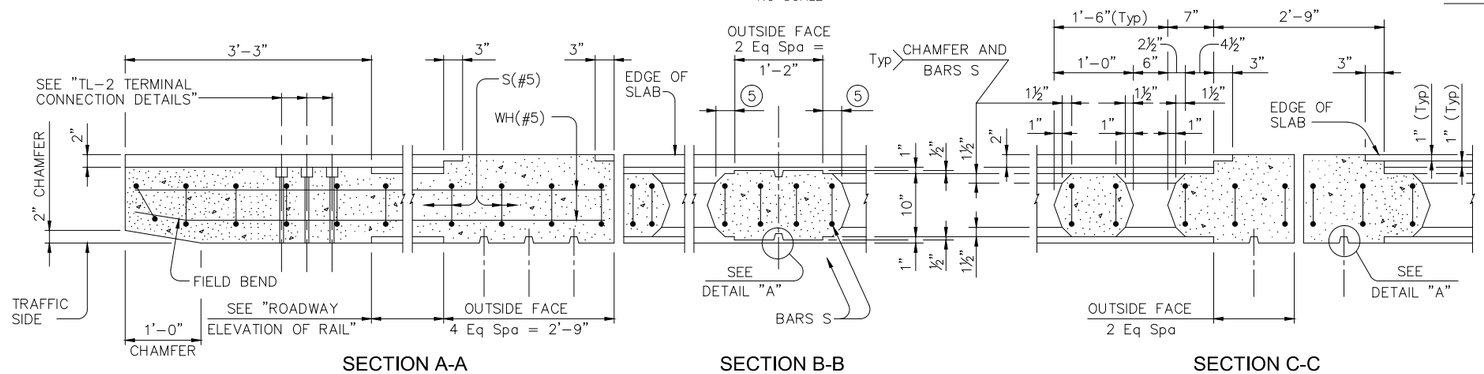

SECTION A-A
NO SCALE

SECTION B-B
NO SCALE

SECTION C-C
NO SCALE

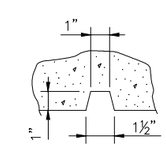

DETAIL A
NO SCALE

The use of this railing is restricted to design speeds of 45 mph or less.

NOTE:
THE CONTRACTOR SHALL VERIFY ALL CONTROLLING FIELD DIMENSIONS BEFORE ORDERING OR FABRICATING ANY MATERIAL.

65% PLANS - NOT FOR CONSTRUCTION

kdresbach DATE PLOTTED => Jun 25, 2014 TIME PLOTTED => 12:54 pm

DESIGN OVERSIGHT	DESIGN	BY M. Burgard	CHECKED J. Elmensdorp
SIGN OFF DATE	DETAILS	BY K. Doesbach	CHECKED X
	QUANTITIES	BY X	CHECKED X

PREPARED FOR THE **CITY OF GOLETA** DEPARTMENT OF PUBLIC WORKS

X PROJECT ENGINEER

BRIDGE NO. X
POST MILE X

HOLLISTER AVE BRIDGE OVER SAN JOSE CREEK

COMBINATION RAIL TYPE C411 DETAILS NO. 1

ORIGINAL SCALE IN INCHES FOR REDUCED PLANS 0 1 2 3

CU EA

DISREGARD PRINTS BEARING EARLIER REVISION DATES X/X/X

REVISION DATES

SHEET 13 OF X

FILE => U:\12036 – Hollister Bridge Project – City of Goleta\400 Project Design Files\430 Bridges & Structures\Submittal 65%\Plans\HB-S-BR.dwg

STRUCTURES DESIGN GENERAL PLAN SHEET (ENGLISH) (REV.07-24-06)

DIST	COUNTY	ROUTE	POST MILES TOTAL PROJECT	SHEET No	TOTAL SHEETS
5	SB	X		X	X

REGISTERED CIVIL ENGINEER — DATE X

PLANS APPROVAL DATE

REGISTERED PROFESSIONAL ENGINEER — No. X — Exp. X — CIVIL — STATE OF CALIFORNIA

DRAKE HAGLAN AND ASSOCIATES OR ITS OFFICERS OR AGENTS SHALL NOT BE RESPONSIBLE FOR THE ACCURACY OR COMPLETENESS OF ELECTRONIC COPIES OF THIS PLAN SHEET.

drake haglan AND ASSOCIATES
11060 White Rock Road, Suite 200
Rancho Cordova, CA 95670

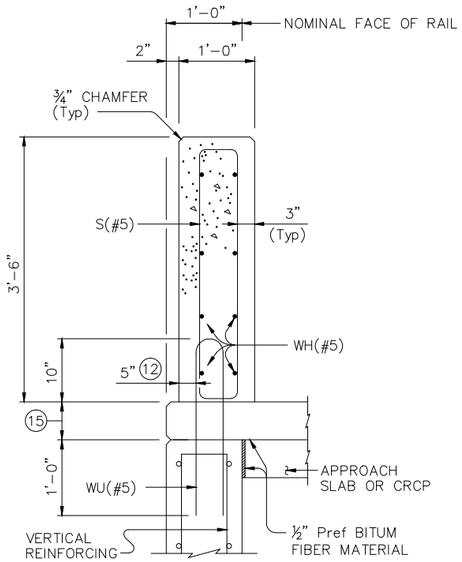

ON ABUTMENT WINGWALLS
OR CIP RETAINING WALLS

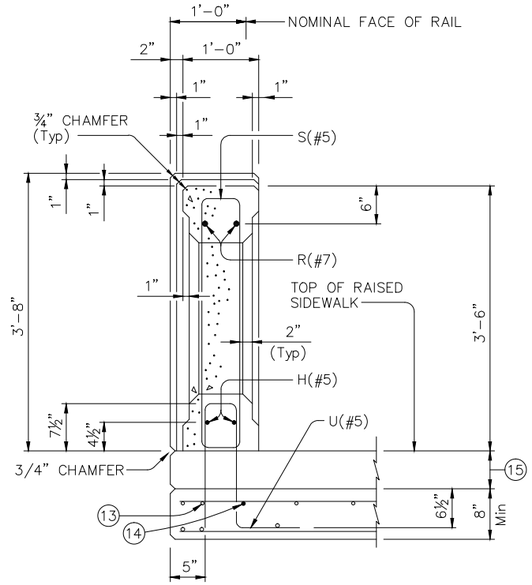

SECTION THRU
POST ON BRIDGE SLAB
(SHOWING PILASTER)

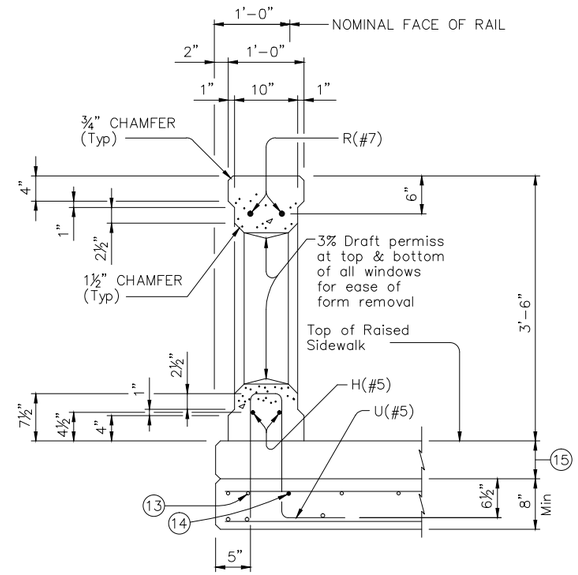

SECTION THRU
WINDOW ON BRIDGE SLAB

SECTIONS THRU RAIL WITH RAISED SIDEWALK

NO SCALE

NOTES:

(9) Increase 2" for structures with overlay.

(12) 5 1/2" when vertical reinforcing has closer clear cover over horizontal reinforcing in abutment wingwalls or retaining walls on traffic side of wall.

(13) As an aid in supporting reinforcement, additional longitudinal bars may be used in the slab with the approval of the Engineer. Such bars must be furnished at the Contractors expense.

(14) Top longitudinal slab bar may be adjusted laterally 3" plus or minus to tie reinforcing.

(15) Raised Sidewalk

NOTE:
THE CONTRACTOR SHALL VERIFY ALL CONTROLLING FIELD DIMENSIONS BEFORE ORDERING OR FABRICATING ANY MATERIAL.

65% PLANS - NOT FOR CONSTRUCTION

kdresbach DATE PLOTTED => Jun 25, 2014 TIME PLOTTED => 12:54 pm

DESIGN	BY M. Burgard	CHECKED J. Elmensdorp	
DETAILS	BY K. Boesbach	CHECKED X	
QUANTITIES	BY X	CHECKED X	

DESIGN OVERSIGHT

SIGN OFF DATE

PREPARED FOR THE
CITY OF GOLETA
DEPARTMENT OF PUBLIC WORKS

X
PROJECT ENGINEER

BRIDGE NO. X
POST MILE X

HOLLISTER AVE BRIDGE OVER SAN JOSE CREEK

COMBINATION RAIL TYPE C411 DETAILS NO. 2

ORIGINAL SCALE IN INCHES FOR REDUCED PLANS 0 1 2 3

CU
EA

DISREGARD PRINTS BEARING EARLIER REVISION DATES → X/X/X

REVISION DATES

SHEET 14 OF X

FILE => U:\12036 – Hollister Bridge Project – City of Goleta\400 Project Design Files\430 Bridges & Structures\Submittal 65%\Plans\HB-S-BR.dwg

STRUCTURES DESIGN GENERAL PLAN SHEET (ENGLISH) (REV.07-24-06)

DIST	COUNTY	ROUTE	POST MILES TOTAL PROJECT	SHEET No	TOTAL SHEETS
5	SB	X		X	X

REGISTERED CIVIL ENGINEER — DATE X

PLANS APPROVAL DATE

REGISTERED PROFESSIONAL ENGINEER — No. X — Exp. X — CIVIL — STATE OF CALIFORNIA

DRAKE HAGLAN AND ASSOCIATES OR ITS OFFICERS OR AGENTS SHALL NOT BE RESPONSIBLE FOR THE ACCURACY OR COMPLETENESS OF ELECTRONIC COPIES OF THIS PLAN SHEET.

drake haglan AND ASSOCIATES
11060 White Rock Road, Suite 200
Rancho Cordova, CA 95670

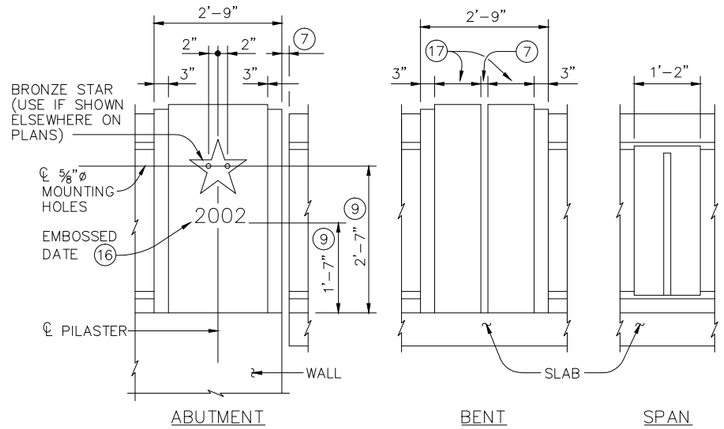

EXTERIOR PILASTER ELEVATIONS

(SHOWING WITHOUT RAISED SIDEWALK)
NO SCALE

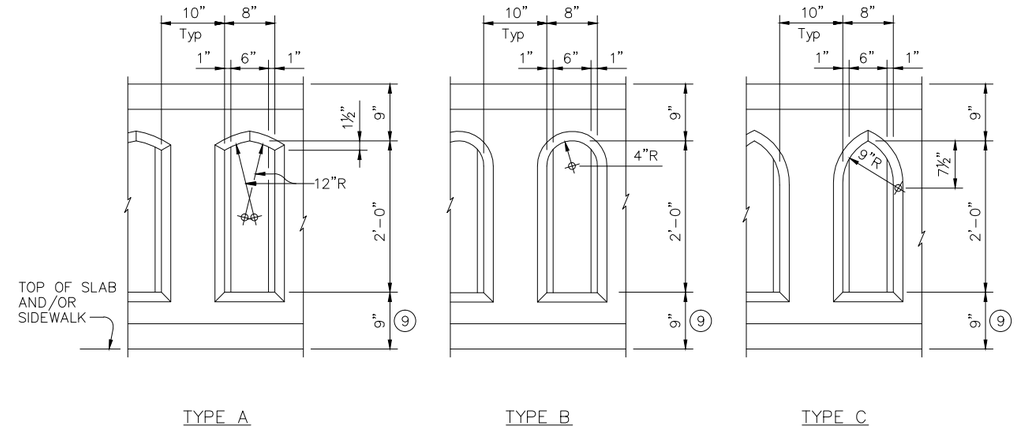

WINDOW TYPES

NO SCALE

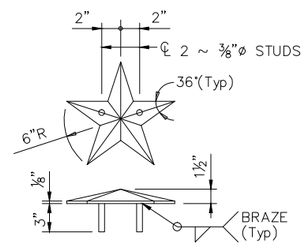

BRONZE STAR DETAIL 20

NO SCALE

Two known manufacturers are:
1. Kassons Castings
   Austin, Texas
2. Southwell Company
   San Antonio, Texas

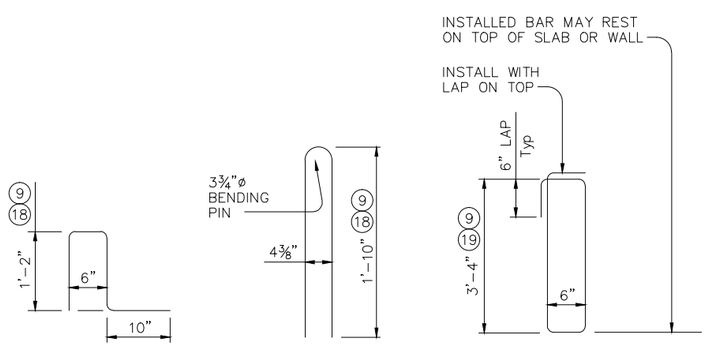

NOTE:
THE CONTRACTOR SHALL VERIFY ALL CONTROLLING FIELD DIMENSIONS BEFORE ORDERING OR FABRICATING ANY MATERIAL.

NOTES:

7. Provide rail joints at ends of all spans the same width as Slab joint opening, except that Rail Joints over construction joints must be 1/4" Min to 3/4" Max in width. Joints must be open if slab joint opening is not sealed. Joints over construction joints and over sealed deck joints must be plugged. Forming material used in joints may be left in place if it is light in color and compressible, such as the following materials: polystyrene, molded cork granules, sponge rubber sheet, etc. If forming material is not left in place, the bottom 6" must be plugged with slab joint sealing compound to prevent drainage and staining.

9. Increase 2" for structures with overlay.

16. Construction year (use if shown elsewhere on plans) 3" High "Plantin Bold" Typeface with 1/4" recess. Placed at one Abutment only or as directed by the Engineer.

17. Dimensions must be the same on each side of joint.

18. For raised sidewalks, add sidewalk height to total bar height. Use sidewalk height at rail's location.

19. Reduce by 2" or field bend over Preformed Bituminous Fiber Material to gain cover.

20. Bronze Star dimensions of the final product can be slightly smaller due to shrinkage after casting.

CONSTRUCTION NOTES:

Attach Bronze Star with a Type III Class C epoxy. Clamp star until epoxy achieves set. Remove any visible epoxy "squeeze out" from under star.

Face of rail and pilasters, parapet must be plumb unless otherwise approved by the Engineer.

A one rub finish must be applied to all railing surfaces unless otherwise shown elsewhere on the plans.

MATERIAL NOTES:

All concrete for railing wall must be Class "C". Provide Class "C" (HPC) concrete if shown elsewhere in the plans.

All reinforcing must be Grade 60.

Epoxy coat all rail reinforcement if slab bars are epoxy coated.

Bronze Star must be cast of architectural bronze having the following composition: Copper 85 %, Tin 5 %, Lead 5 %, Zinc 5 %.

GENERAL NOTES:

This rail was evaluated based on the results of previous crash tests and approved for a NCHRP Report 350 TL-2 rating. This rail is only approved for low speed use, design speeds of 45 mph and less.

This railing cannot be used on bridges with expansion joints providing more than 5" movement.

Rail anchorage details shown on this standard may require modification for select structure types. See appropriate details elsewhere in plans for these modifications.

Shop drawings will not be required for this rail.

See Bridge Layout or other plan sheets for the following: dimensions with the number of span pilasters, dimensions with the number of windows, window type, inclusion of bronze stars, inclusion of construction year with abutment identity.

Erection drawings showing span number, span pilaster locations, number of windows between pilasters and spacing to first window (see Note 6) must be submitted to the Engineer for approval.

Average weight of railing with no overlay increase and no pilasters is 350 plf.

65% PLANS - NOT FOR CONSTRUCTION

kdresbach DATE PLOTTED => Jun 25, 2014 TIME PLOTTED => 12:54 pm

DESIGN OVERSIGHT

SIGN OFF DATE

	BY	CHECKED
DESIGN	M. Burgard	J. Elmensdorp
DETAILS	K. Boesbach	X
QUANTITIES	X	X

ORIGINAL SCALE IN INCHES FOR REDUCED PLANS 0 1 2 3

PREPARED FOR THE
CITY OF GOLETA
DEPARTMENT OF PUBLIC WORKS

X
PROJECT ENGINEER

CU
EA

BRIDGE NO. X
POST MILE X

HOLLISTER AVE BRIDGE OVER SAN JOSE CREEK

COMBINATION RAIL TYPE C411 DETAILS NO. 3

DISREGARD PRINTS BEARING EARLIER REVISION DATES X/X/X

REVISION DATES

SHEET 15 OF X

FILE => U:\12036 – Hollister Bridge Project – City of Goleta\400 Project Design Files\430 Bridges & Structures\Submittal 65%\Plans\HB-S-BR.dwg

STRUCTURES DESIGN GENERAL PLAN SHEET (ENGLISH) (REV.07-24-06)

DIST	COUNTY	ROUTE	POST MILES TOTAL PROJECT	SHEET No	TOTAL SHEETS
5	SB	X		X	X

REGISTERED CIVIL ENGINEER — DATE X

PLANS APPROVAL DATE

REGISTERED PROFESSIONAL ENGINEER — No. X — Exp. X — CIVIL — STATE OF CALIFORNIA

DRAKE HAGLAN AND ASSOCIATES OR ITS OFFICERS OR AGENTS SHALL NOT BE RESPONSIBLE FOR THE ACCURACY OR COMPLETENESS OF ELECTRONIC COPIES OF THIS PLAN SHEET.

drake haglan AND ASSOCIATES
11060 White Rock Road, Suite 200
Rancho Cordova, CA 95670

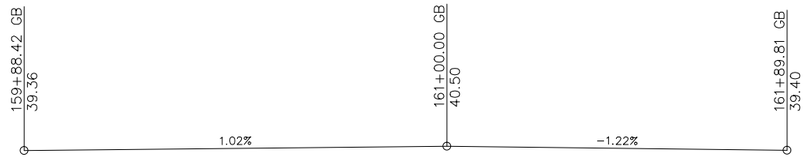

PROFILE GRADE AT TOP OF WALL
NO SCALE

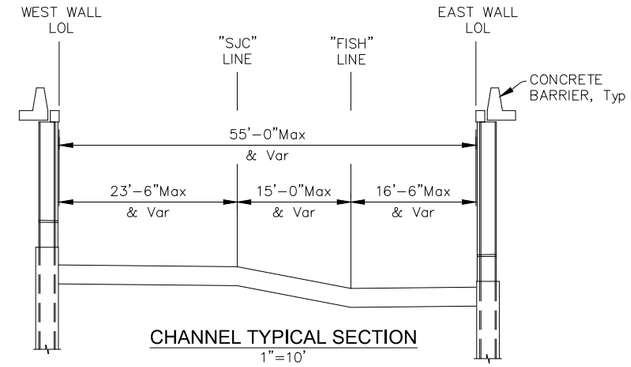

CHANNEL TYPICAL SECTION
1"=10'

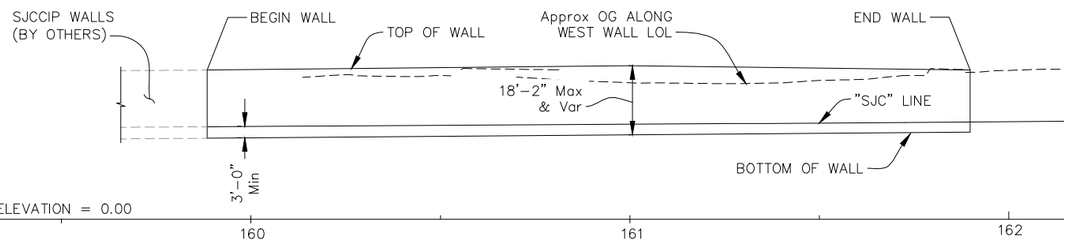

ELEVATION
1"=20'

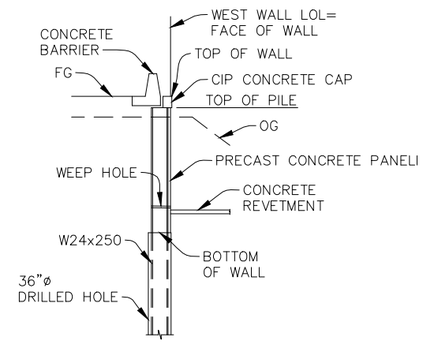

WALL TYPICAL SECTION
1"=10'

LOAD AND RESISTANCE FACTOR DESIGN

DESIGN: AASHTO LRFD Bridge Design Specifications, 4th Edition and the Caltrans Amendments, preface dated November 2011.

United States Army Corps of Engineers
EM 1110-2-2007 (April 1995)
EM 1110-2-2100 (December 2005)
EM 1110-2-2104 (June 1992)
EM 1110-2-2105 (March 1993)
EM 1110-2-2502 (September 1989)

SEISMIC DESIGN: Caltrans Seismic Design Criteria (SDC), Version 1.7 April 2013.

United States Army Corps of Engineers
EM 1110-2-6053 (May 2002)
EM 1110-2-1806 (July 1995)

LIVE LOAD: Live Load Surcharge = 250psf

SOIL PARAMETERS:

Retained Soil Unit Weight	= 125 pcf
Retained Soil ø	= XX°
Retained Soil C	= 0 psf
Lightweight Soil Unit Weight	= 6.8 pcf
Lightweight Soil ø	= 35°
Lightweight Soil C	= 0 psf
Foundation Soil Unit Weight	= 125 pcf
Foundation Soil ø	= XX°
Foundation Soil C	= 0 psf

SEISMIC LOADING: See "DECK CONTOURS" sheet for ARS curve.
Rh = 2/3 PGΔ
Liquefaction/Lateral Spreading Loading not applied, refer to EM 1110-2-2502 (September 1989)

REINFORCED CONCRETE: fy = 60 ksi
f'c = 4000 psi

STEEL SOLDIER PILES: fy = 50 ksi

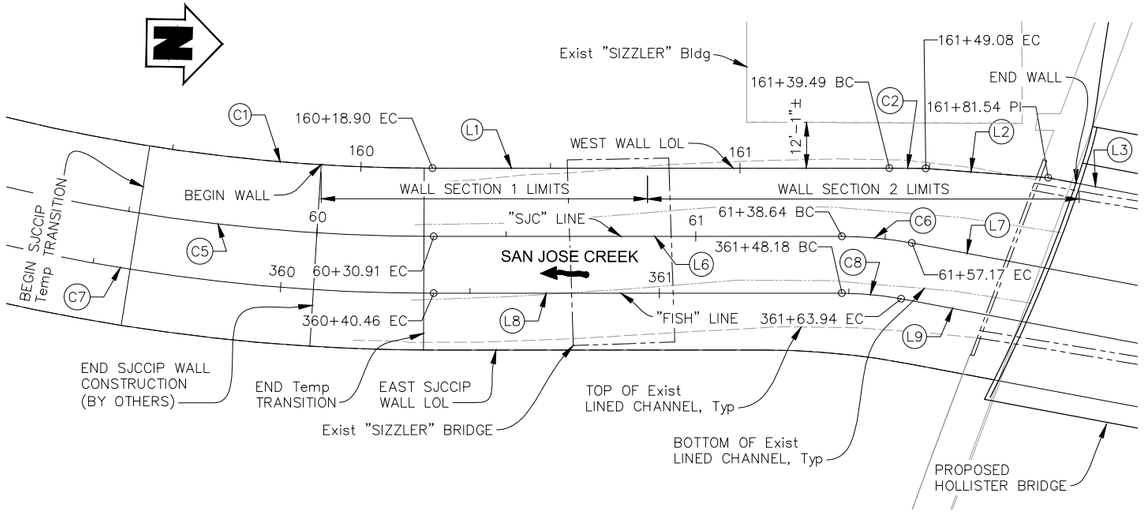

PLAN
1"=20'

CURVE DATA

NO.	R	Δ	T	L
C1	477.00'	29°42'48"	126.53'	247.37'
C2	833.32'	0°39'33"	4.79'	9.59'
C5	495.00'	28°13'37"	124.46'	243.86'
C6	100.00'	10°37'09"	9.29'	18.53'
C7	510.00'	28°13'37"	128.23'	251.25'
C8	85.00'	10°37'09"	7.90'	15.75'

LINE DATA

NO.	BRG	L
L1	N 01°18'52.37" W	120.59'
L2	N 03°06'53.90" E	32.46'
L3	N 09°18'16.72" E	115.42'
L6	N 01°18'52.37" W	107.72'
L7	N 09°18'16.72" E	160.13'
L8	N 01°18'52.37" W	107.72'
L9	N 09°18'16.72" E	140.57'

LEGEND:

Indicates direction of water flow

Indicates existing structures to be removed

65% PLANS - NOT FOR CONSTRUCTION

USERNAME => kdresbach DATE PLOTTED => Jun 25, 2014 TIME PLOTTED => 12:55 pm

DESIGN OVERSIGHT	DESIGN	BY M. Burgard	CHECKED J. Elmensdorp	ALLOWABLE STRESS DESIGN	LIVE LOADING:
	DETAILS	BY A. Barba	CHECKED X	LAYOUT BY X	CHECKED X
SIGN OFF DATE	QUANTITIES	BY X	CHECKED X	SPECIFICATIONS BY X	PLANS AND SPECS COMPARED X

STRUCTURES DESIGN GENERAL PLAN SHEET (ENGLISH) (REV. 10/25/05)

ORIGINAL SCALE IN INCHES FOR REDUCED PLANS 0 1 2 3

PREPARED FOR THE
CITY OF GOLETA
DEPARTMENT OF PUBLIC WORKS

PROJECT ENGINEER
CU
EA

BRIDGE NO. X
POST MILE X

HOLLISTER AVE BRIDGE OVER SAN JOSE CREEK

GENERAL PLAN - RETAINING WALL (WEST)

DISREGARD PRINTS BEARING EARLIER REVISION DATES X/X/X

REVISION DATES

SHEET 16 OF X

FILE => U:\12036 - Hollister Bridge Project - City of Goleta\400 Project Design Files\430 Bridges & Structures\Submittal 65%\Plans\HB-S-GP_RW.dwg

STRUCTURES DESIGN GENERAL PLAN SHEET (ENGLISH) (REV.07-24-06)

DIST	COUNTY	ROUTE	POST MILES TOTAL PROJECT	SHEET No	TOTAL SHEETS
5	SB	X		X	X

REGISTERED CIVIL ENGINEER — DATE X

PLANS APPROVAL DATE

REGISTERED PROFESSIONAL ENGINEER — No. X — Exp. X — CIVIL — STATE OF CALIFORNIA

DRAKE HAGLAN AND ASSOCIATES OR ITS OFFICERS OR AGENTS SHALL NOT BE RESPONSIBLE FOR THE ACCURACY OR COMPLETENESS OF ELECTRONIC COPIES OF THIS PLAN SHEET.

drake haglan AND ASSOCIATES
11060 White Rock Road, Suite 200
Rancho Cordova, CA 95670

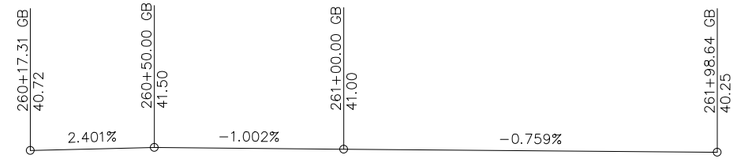

PROFILE GRADE AT TOP OF WALL
NO SCALE

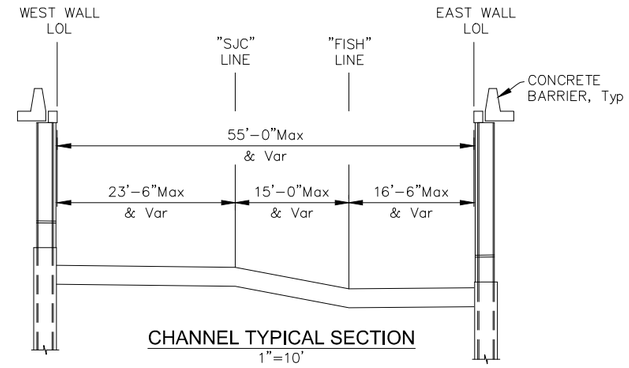

CHANNEL TYPICAL SECTION
1"=10'

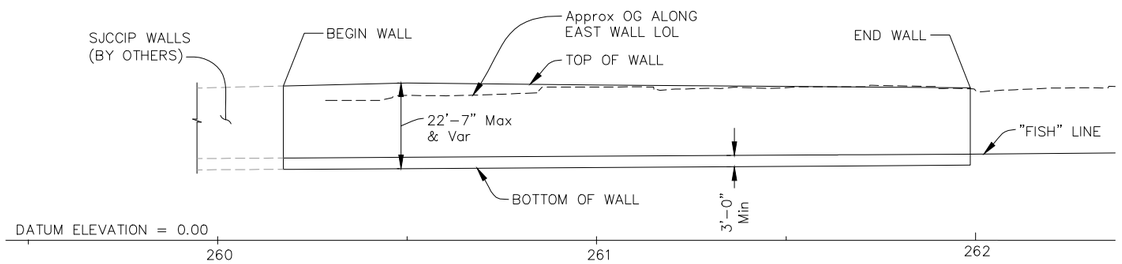

ELEVATION
1"=20'

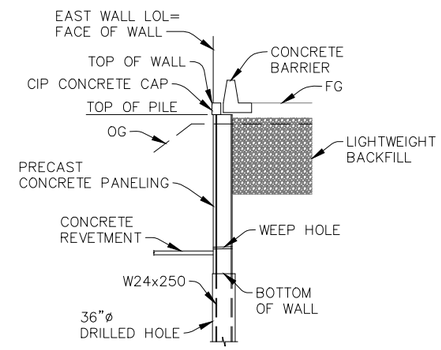

WALL TYPICAL SECTION
1"=10'

INDEX TO PLANS

NO.	TITLE
S−1	GENERAL PLAN − RETAINING WALL (WEST)
S−2	GENERAL PLAN − RETAINING WALL (EAST)
S−3	FOUNDATION PLAN − RETAINING WALL (WEST)
S−4	FOUNDATION PLAN − RETAINING WALL (EAST)
S−5	RETAINING WALL DETAILS NO. 1
S−6	RETAINING WALL DETAILS NO. 2
S−7	RETAINING WALL DETAILS NO. 3

CALTRANS STANDARD PLANS DATED 2010

	A10A	ABBREVIATIONS (SHEET 1 OF 2)
RSP	A10B	ABBREVIATIONS (SHEET 2 OF 2)
	A10C	LINES AND SYMBOLS (SHEET 1 OF 3)
	A10D	LINES AND SYMBOLS (SHEET 2 OF 3)
	A10E	LINES AND SYMBOLS (SHEET 3 OF 3)
	A62A	EXCAVATION AND BACKFILL MISCELLANEOUS DETAILS

STANDARD PLAN SHEET NO.

DETAIL NO.

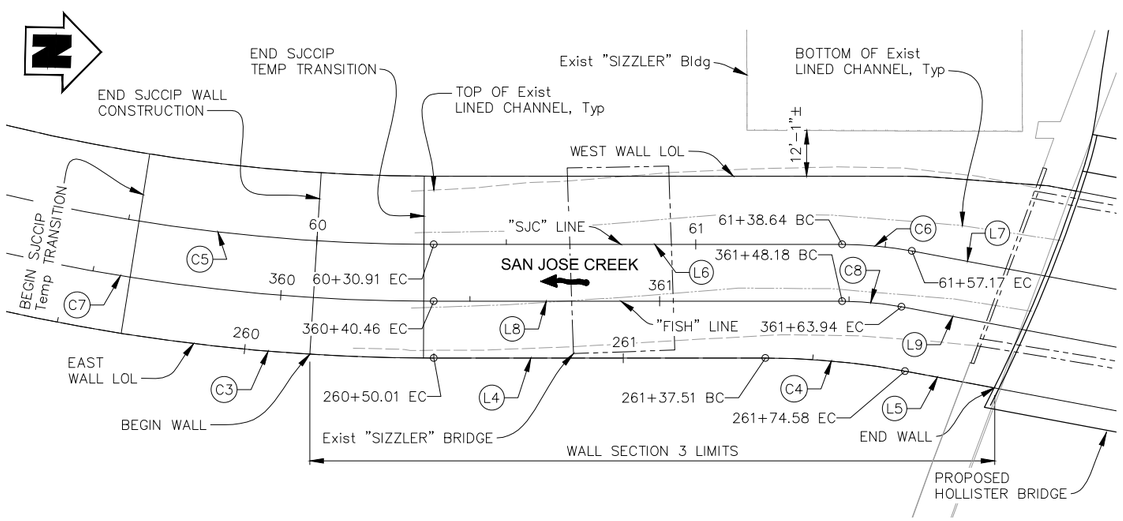

PLAN
1"=20'

CURVE DATA

NO.	R	Δ	T	L
C3	525.00'	28°13'37"	132.00'	258.64'
C4	200.00'	10°37'09"	18.59'	37.07'
C5	495.00'	28°13'37"	124.46'	243.86'
C6	100.00'	10°37'09"	9.29'	18.53'
C7	510.00'	28°13'37"	128.23'	251.25'
C8	85.00'	10°37'09"	7.90'	15.75'

LINE DATA

NO.	BRG	L
L4	N 01°18'52.37" W	87.50'
L5	N 09°18'16.72" E	150.59'
L6	N 01°18'52.37" W	107.72'
L7	N 09°18'16.72" E	160.13'
L8	N 01°18'52.37" W	107.72'
L9	N 09°18'16.72" E	140.57'

LEGEND:

Indicates direction of water flow

Indicates existing structures to be removed

65% PLANS - NOT FOR CONSTRUCTION

USERNAME => kdresbach DATE PLOTTED => Jun 25, 2014 TIME PLOTTED => 12:55 pm

DESIGN OVERSIGHT	DESIGN	BY M. Burgard	CHECKED J. Elmensdorp	ALLOWABLE STRESS DESIGN	LIVE LOADING:
	DETAILS	BY A. Barba	CHECKED X	LAYOUT BY X	CHECKED X
SIGN OFF DATE	QUANTITIES	BY X	CHECKED X	SPECIFICATIONS BY X	PLANS AND SPECS COMPARED X

STRUCTURES DESIGN GENERAL PLAN SHEET (ENGLISH) (REV. 10/25/05)

ORIGINAL SCALE IN INCHES FOR REDUCED PLANS 0 1 2 3

PREPARED FOR THE **CITY OF GOLETA** DEPARTMENT OF PUBLIC WORKS

PROJECT ENGINEER

CU
EA

BRIDGE NO. X

POST MILE X

HOLLISTER AVE BRIDGE OVER SAN JOSE CREEK

GENERAL PLAN - RETAINING WALL (EAST)

DISREGARD PRINTS BEARING EARLIER REVISION DATES X/X/X

REVISION DATES

SHEET 17 OF X

FILE => U:\12036 − Hollister Bridge Project − City of Goleta\400 Project Design Files\430 Bridges & Structures\Submittal 65%\Plans\HB−S−GP_RW.dwg

STRUCTURES DESIGN GENERAL PLAN SHEET (ENGLISH) (REV.07−24−06)

DIST	COUNTY	ROUTE	POST MILES TOTAL PROJECT	SHEET No	TOTAL SHEETS
5	SB	X		X	X

REGISTERED CIVIL ENGINEER X DATE

PLANS APPROVAL DATE

REGISTERED PROFESSIONAL ENGINEER X No. X Exp. X CIVIL STATE OF CALIFORNIA

DRAKE HAGLAN AND ASSOCIATES OR ITS OFFICERS OR AGENTS SHALL NOT BE RESPONSIBLE FOR THE ACCURACY OR COMPLETENESS OF ELECTRONIC COPIES OF THIS PLAN SHEET.

drake haglan AND ASSOCIATES
11060 White Rock Road, Suite 200
Rancho Cordova, CA 95670

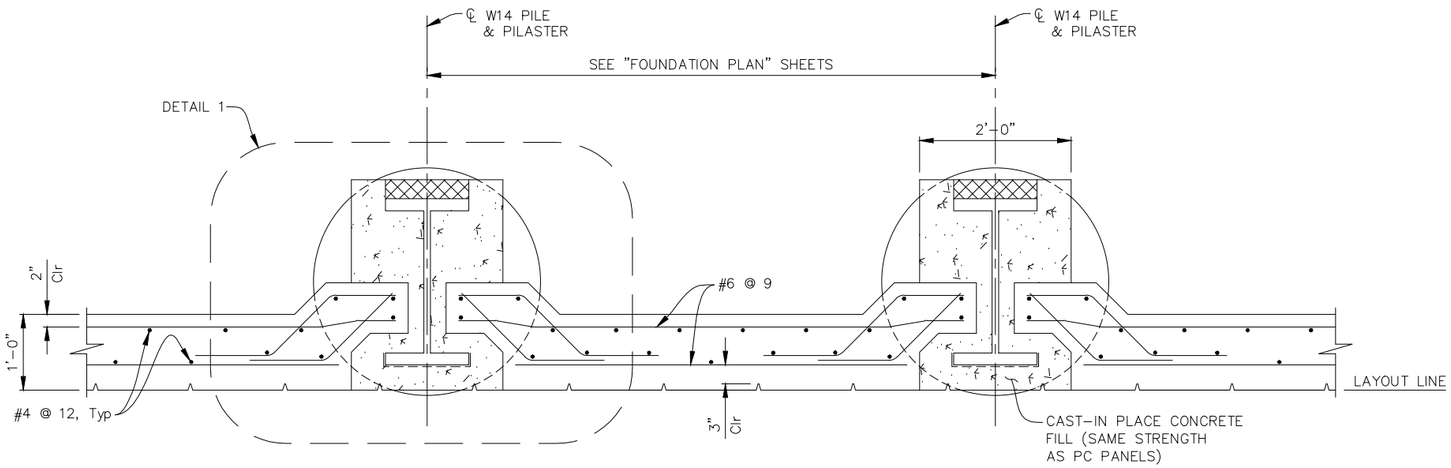

PRECAST PANEL - PLAN

1"=1'-0"

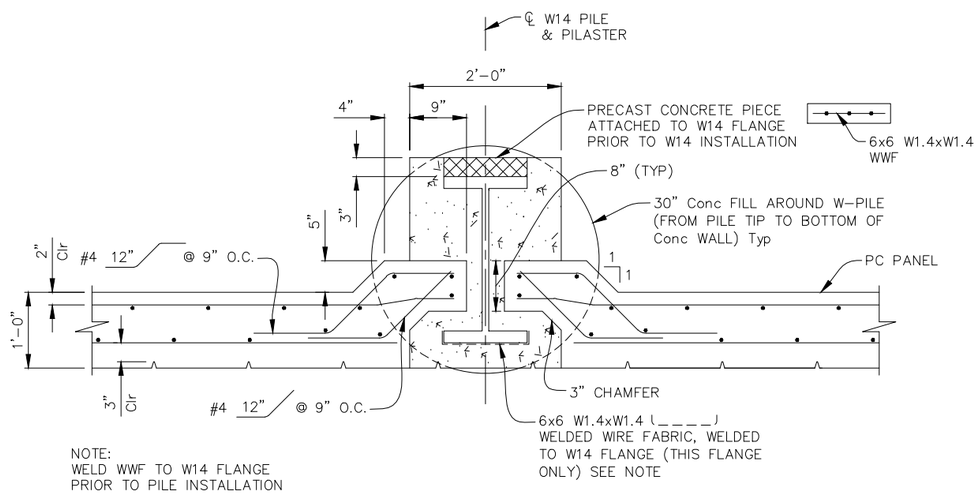

NOTE:
WELD WWF TO W14 FLANGE PRIOR TO PILE INSTALLATION

DETAIL 1

1"=1'-0"

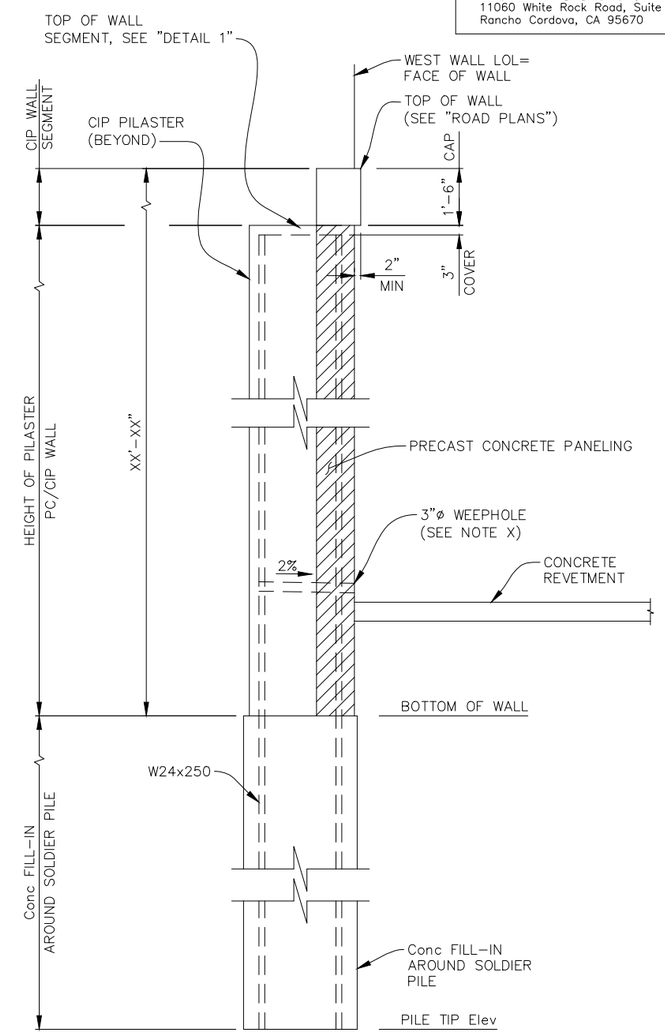

NOTE:
THE CONTRACTOR SHALL VERIFY ALL CONTROLLING FIELD DIMENSIONS BEFORE ORDERING OR FABRICATING ANY MATERIAL.

65% PLANS - NOT FOR CONSTRUCTION

kdresbach DATE PLOTTED => Jun 25, 2014 TIME PLOTTED => 12:55 pm

DESIGN OVERSIGHT	DESIGN	BY M. Burgard	CHECKED J. Elmensdorp
SIGN OFF DATE	DETAILS	BY K. Dresbach	CHECKED X
	QUANTITIES	BY X	CHECKED X

PREPARED FOR THE **CITY OF GOLETA** DEPARTMENT OF PUBLIC WORKS

X PROJECT ENGINEER

BRIDGE NO. X
POST MILE X

HOLLISTER AVE BRIDGE OVER SAN JOSE CREEK

RETAINING WALL DETAILS NO. 1

ORIGINAL SCALE IN INCHES FOR REDUCED PLANS 0 1 2 3

CU
EA

DISREGARD PRINTS BEARING EARLIER REVISION DATES X/X/X

REVISION DATES | SHEET X | OF X

FILE => U:\12036 – Hollister Bridge Project – City of Goleta\400 Project Design Files\430 Bridges & Structures\Submittal 65%\Plans\HB-S-RWD.dwg

STRUCTURES DESIGN GENERAL PLAN SHEET (ENGLISH) (REV.07-24-06)

DIST	COUNTY	ROUTE	POST MILES TOTAL PROJECT	SHEET No	TOTAL SHEETS
5	SB	X		X	X

REGISTERED CIVIL ENGINEER — DATE X

PLANS APPROVAL DATE

REGISTERED PROFESSIONAL ENGINEER — X — No. X — Exp. X — CIVIL — STATE OF CALIFORNIA

DRAKE HAGLAN AND ASSOCIATES OR ITS OFFICERS OR AGENTS SHALL NOT BE RESPONSIBLE FOR THE ACCURACY OR COMPLETENESS OF ELECTRONIC COPIES OF THIS PLAN SHEET.

drake haglan AND ASSOCIATES
11060 White Rock Road, Suite 200
Rancho Cordova, CA 95670

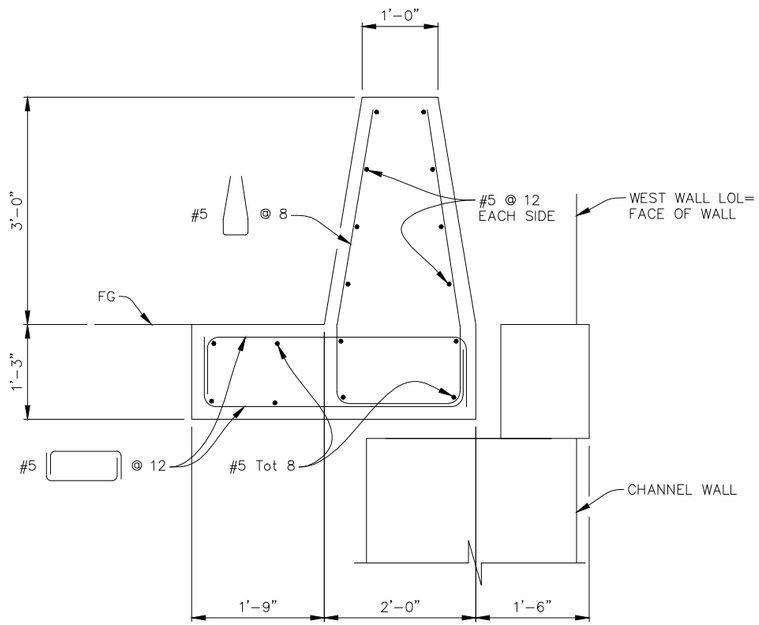

CONCRETE BARRIER (TYPE 60 MODIFIED)
1"=1'-0"

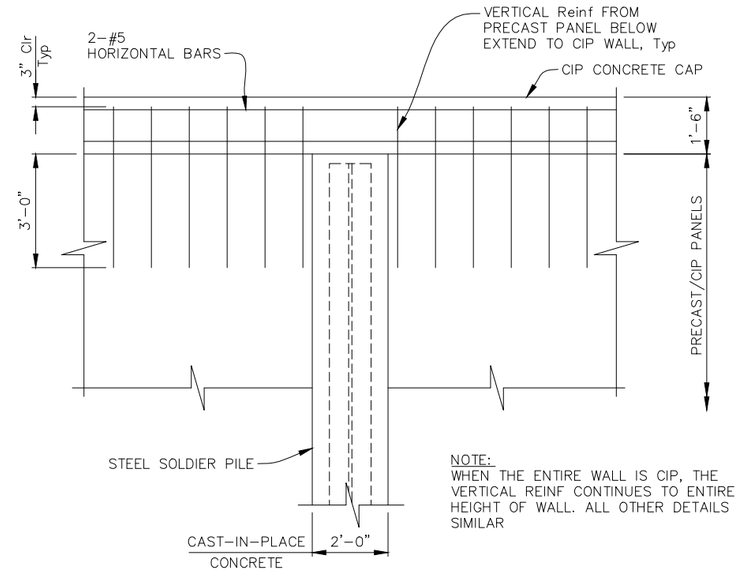

NOTE:
WHEN THE ENTIRE WALL IS CIP, THE VERTICAL REINF CONTINUES TO ENTIRE HEIGHT OF WALL. ALL OTHER DETAILS SIMILAR

ELEVATION VIEW
1"=1'-0"

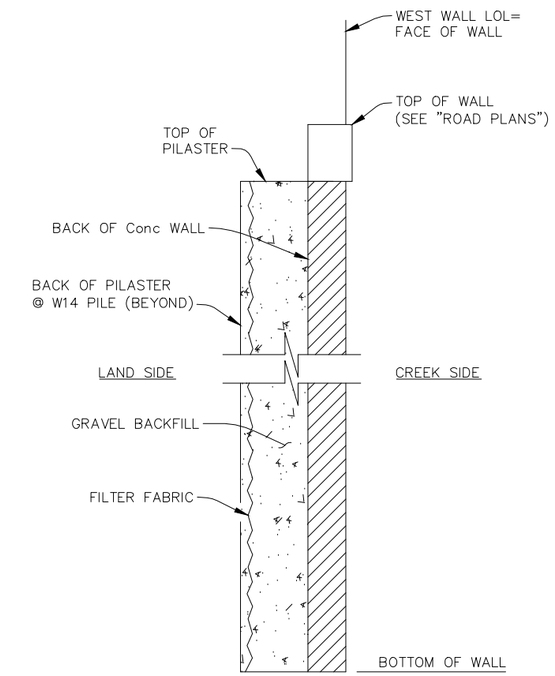

SECTION X-X
NO SCALE

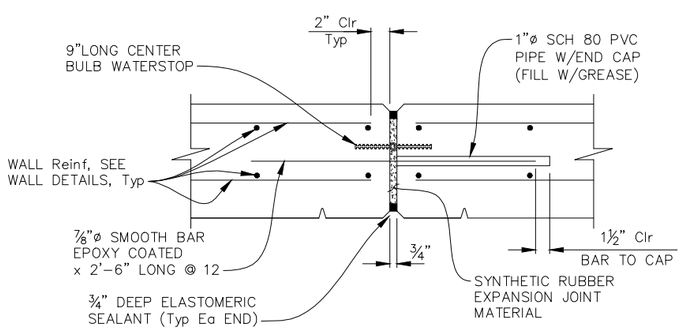

WALL EXPANSION JOINT DETAIL
1 1/2"=1'-0"

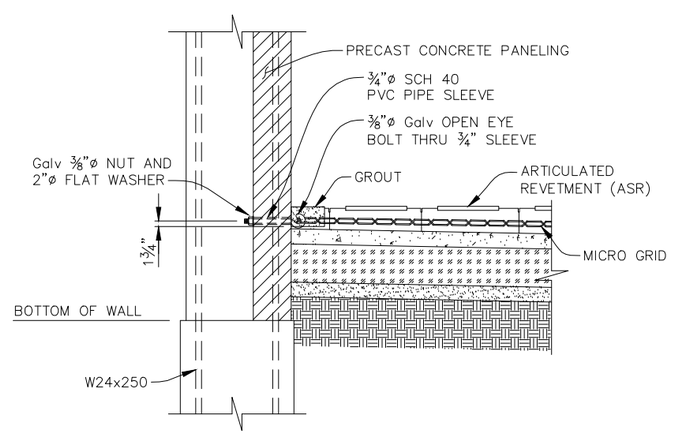

WALL EXPANSION JOINT DETAIL
NO SCALE

NOTE:
THE CONTRACTOR SHALL VERIFY ALL CONTROLLING FIELD DIMENSIONS BEFORE ORDERING OR FABRICATING ANY MATERIAL.

65% PLANS - NOT FOR CONSTRUCTION

kdresbach DATE PLOTTED => Jun 25, 2014 TIME PLOTTED => 12:55 pm

DESIGN	BY M. Burgard	CHECKED J. Elmensdorp	
DETAILS	BY K. Dresbach	CHECKED X	
QUANTITIES	BY X	CHECKED X	

DESIGN OVERSIGHT

SIGN OFF DATE

PREPARED FOR THE
CITY OF GOLETA
DEPARTMENT OF PUBLIC WORKS

X
PROJECT ENGINEER

BRIDGE NO. X
POST MILE X

HOLLISTER AVE BRIDGE OVER SAN JOSE CREEK

RETAINING WALL DETAIL NO. 2

ORIGINAL SCALE IN INCHES FOR REDUCED PLANS 0 1 2 3

CU
EA

DISREGARD PRINTS BEARING EARLIER REVISION DATES X/X/X

REVISION DATES — SHEET X OF X

FILE => U:\12036 – Hollister Bridge Project – City of Goleta\400 Project Design Files\430 Bridges & Structures\Submittal 65%\Plans\HB-S-RWD.dwg

STRUCTURES DESIGN GENERAL PLAN SHEET (ENGLISH) (REV.07-24-06)

APPENDIX B
CRITERIA POLLUTANT EMISSIONS TECHNICAL MEMORANDUM

URS

Memorandum

Date: December 2, 2013

To: Ms. Rosemarie Gaglione, PE, Assistant City Engineer City of Goleta, Goleta, CA 93117

From: Mr. Matt Dunn, Principal Engineer, URS Corporation
130 Robin Hill Road, Suite 100, Santa Barbara, CA 93117

Subject: **Criteria Pollutant Emissions from the Proposed Hollister Avenue Bridge Replacement Project, City of Goleta, Santa Barbara County, California**

1.0 INTRODUCTION

The City of Goleta (Applicant) proposes to replace the existing 4-lane Hollister Avenue Bridge with a new 4-lane bridge. Replacement of the bridge will allow the bridge to meet current design standards. The bridge spans San Jose Creek and is adjacent to the State Route 217/Hollister Avenue Interchange. The project area is within the jurisdiction of the Santa Barbara County Air Pollution Control District (SBCAPCD). Construction is estimated to start in 2015 and would take approximately 24 months to complete. URS quantified criteria pollutant emissions resulting from the construction of the Project using construction data provided by the Project Engineer. Emission factors and other data are from the California Emissions Estimator Model™ (CalEEMod) version 2013.2.2 (successor to planning level emissions estimating software, URBEMIS). This software was used as the criteria pollutant quantification tool for this project. The Project Engineer estimated the project construction activities would occur over a 24 month period.

2.0 METHODOLOGY

2.1 EMISSION FACTORS FOR FUEL COMBUSTION

URS quantified criteria pollutant emissions resulting from the construction of the Project using construction data provided by the Project Engineer. Emission factors and other data are from the CalEEMod. This software was used as the air emissions quantification tool for this project. The Project Engineer estimated the project construction activities would occur over a 24 month period.

The emissions factors of the criteria air pollutants include: oxides of nitrogen (NO_x), sulfur dioxide (SO_2), carbon monoxide (CO), and particulate matter under 10 microns (PM_{10}) and under 2.5 microns ($PM_{2.5}$). The emissions of reactive organic compounds (ROC), also known as volatile organic compounds (VOC), were also quantified. This class of compound is a precursor to the criteria air pollutant ozone (O_3).

Emission factors for off-site emissions from on-road travel (via public highways to the site access) were calculated in CalEEMod. This software program calculates on-road vehicle emissions based on emission factors from California specific highway emissions database, the latest version of the California EMission FACtor model (EMFAC2011). Emissions from personal vehicles for worker and vendor commuting, and trucks for material hauling are based on the number of trips and vehicle miles traveled (VMT) along with emission factors from EMFAC2011. The emissions from mobile sources were calculated by CalEEMod as follows:

$$Emissions_{pollutant} = VMT * EF_{running,pollutant}$$

Where:

$Emissions_{pollutant}$ = emissions (CO_2) from vehicle running for each pollutant

VMT = vehicle miles traveled

$EF_{running,pollutant}$ = emission factor for running emissions

The model was run with the calendar year 2015 selected as the start of construction and 2017 as the date of operation. The vehicle class selected for worker personal vehicles was CalEEMod default, a mix of the following categories: Light Duty Auto (LDA), Light Duty Truck 1 (LDT1), and Light Duty Truck 2 (LDT2). The vehicle class for vendors was selected as CalEEMod default, a mix of Heavy Heavy Duty Diesel Truck (HHDT) and Medium Heavy Duty Trucks (MHDT). Construction material hauling was selected as CalEEMod default, HHDT, to represent off-site travel.

Emission factors for on-site diesel construction equipment were calculated in CalEEMod; the software program calculates the exhaust emissions based on California Air Resources Board (CARB) OFFROAD2011 methodology using the equation presented below.

$$Emission_{DieselEx} = \Sigma_i (EFi = x\ Pop_i\ x\ AvgHp_i\ x\ Load_i\ x\ Activity_i)$$

Where:

EF = Emission factor in grams per horsepower-hour (g/bhp-hr) as processed from OFFROAD2011

Pop = Population, or the number of pieces of equipment

AvgHp = Maximum rated average horsepower

Load = Load factor

Activity = Hours of operation

i = equipment type

The software calculates the exhaust emission factors for each piece of equipment at each horsepower range by back calculating from total daily emissions reported in the model output files using the following formula:

$$Emission\ Factor\ \left[\frac{g}{hphr}\right] = \frac{Total\ Daily\ Exhaust}{Activity\ x\ AvgHP\ x\ LF\ x\ 907184.74}$$

Where:

Total Daily Exhaust = Total pollutant emissions [tons/day]

Activity = Total daily statewide usage of equipment [hours/day]

AvgHP = Average HP of equipment within the horsepower range [HP]

LF = Load Factor of equipment [unitless]

907,184.74 = Conversion factor from tons to grams

Total Daily Exhaust and Activity were obtained from OFFROAD2011 model output, while Average HP and LF were obtained from input files to the model.

The model is made to be region specific. Its emission quantification is based on estimated regional equipment population for a given year. Therefore, the model applied calendar years 2015- 2017 set in the South of Santa Ynez Range area of Santa Barbara County as the basis. The construction activity is assumed to start in May 2015.

2.2 ON-SITE CONSTRUCTION ACTIVITY

Calculations of emissions due to on-site construction activity were based on information provided by the Project Engineer regarding the type and quantity of construction equipment anticipated to operate on-site each month. The equipment utilization list presented in Table 1 was assumed to be fueled on diesel. Engine load factors of equipment were preselected by default levels of CalEEMod; this information is based on historical data from CARB and SBCAPCD. The utilization of the equipment (operating hours per day) was based on estimates provided by the Project Engineer.

2.3 OFF-SITE TRAVEL DISTANCE

Travel distance assumed a distribution of passenger vehicles for workers commuting based on the CalEEMod default of 12.3 miles. It was assumed that passenger vehicles for the construction work force transported an average of one passenger. This is conservative considering some workers may carpool. Emissions from passenger vehicles traveling to and from the site were based on estimated construction labor force per month as shown in Table 2.

Delivery truck trips for material hauling shown in Table 3 reflect the transport of construction materials within an average 50 mile radius.

2.4 FUGITIVE DUST EMISSIONS

Fugitive emissions of particulates (PM_{10} and $PM_{2.5}$) were quantified using CalEEMod. The program calculates fugitive dust associated with the site preparation and grading phases from three major activities: haul road grading, earth bulldozing, and truck loading. As recommended by SBCAPCD, the fugitive dust emissions from the grading phase are calculated using the methodology described in United States Environmental Protection Agency (USEPA) AP-42, Compilation of Air Pollutant Emission Factors. The CalEEMod uses these emission quantification methodologies within its algorithm to develop fugitive dust estimates. Fugitive emissions from material movement dust calculations were determined by CalEEMod default values for material moisture content and material silt content.

The ratio of PM_{10} to $PM_{2.5}$ for emissions quantification is based on EPA and CARB factors from historical studies.

CalEEMod uses AP-42 methodology to calculate fugitive emissions from vehicles that drive on both paved and unpaved roads generating fugitive dust by dispersing the silt from the roads. CalEEMod default values were used for road silt and moisture content of the dirt roads.

3.0 OPERATIONS BASED EMISSIONS

The project will not induce growth, nor will the project generate new traffic. It will not cause any new significant long-term traffic emissions.

4.0 THRESHOLDS OF SIGNIFICANCE

Per the City of Goleta's *Environmental Thresholds and Guidelines Manual*, a significant adverse air quality impact may occur when a project, individually or cumulatively, triggers either of the following:

- Interferes with progress toward the attainment of the ozone standard by releasing emissions which equal or exceed the established long-term quantitative thresholds for NOx and ROC; or

- Equals or exceeds the State or Federal ambient air quality standards for any criteria pollutant (as determined by modeling).

The SBCAPCD does not currently have quantitative thresholds of significance in place for short-term or construction emissions; however, the SBCAPCD uses 25 tons per year for ROC or NOx as a guideline for determining the significance of construction impacts.

No quantitative threshold has been established for short-term, construction related particulate matter (PM_{10}) (50% of total dust). However, Santa Barbara County is not in compliance with

State standards for airborne PM_{10}, therefore, construction generated fugitive dust is subject to the City's standard dust mitigation requirements.

This project involves demolition of an existing structure. This structure may contain friable asbestos, a federally regulated hazardous air pollutant under the National Emissions Standards for Hazardous Air Pollutants (NESHAP). Friable asbestos pose a serious health hazard as these fibers can become permanently lodged in body tissues. Since there is no known safe level of exposure, all asbestos exposure should be avoided.

5.0 RESULTS

Results of the criteria pollutant emission calculations are presented in Tables 4 and 5. Table 4 presents the total construction phase (on-site and off-site) emissions. This table includes the on-site activity of off-road equipment, the on-road mobile sources making deliveries to the site during the construction phase and on-road mobile sources delivering construction materials. These data indicate that all emissions of ROC, and NOx are below 25 tons per year and this construction project impact will be considered less than significant. Table 5 shows the maximum daily emissions.

6.0 MINIMIZATION MEASURES

The following are required or recommended minimization measures.

6.1 REQUIRED MEASURES

AQ-1 All portable diesel-powered construction equipment shall be registered with the state's portable equipment registration program OR shall obtain an SBCAPCD permit.

AQ-2 Fleet owners of mobile construction equipment are subject to the CARB Regulation for In-use Off-road Diesel Vehicles (Title 13 California Code of Regulations, Chapter 9, § 2449), the purpose of which is to reduce diesel particulate matter (PM) and criteria pollutant emissions from in-use (existing) off-road diesel-fueled vehicles.

AQ-3 All commercial diesel vehicles are subject to Title 13, § 2485 of the California Code of Regulations, limiting engine idling time. Idling of heavy-duty diesel construction equipment and trucks during loading and unloading shall be limited to five minutes; electric auxiliary power units should be used whenever possible.

AQ-4 If the construction site is graded and left undeveloped for over four weeks, the City or its qualified contractor shall employ the following methods immediately to inhibit dust generation:

a. Seeding and watering to revegetate graded areas; and/or

b. Spreading of soil binders; and/or

c. Any other methods deemed appropriate by the Community Services Director and in accordance with the Contract Special Provisions and the Caltrans Standard Specifications.

Plan Requirements and Timing: These requirements shall be included in the construction specifications.

Monitoring: The City's construction manager or representative shall perform periodic site inspections to verify compliance as well as contact the designated monitor as necessary to ensure compliance with dust control measures.

AQ-5 The City or its qualified contractor shall submit to the SBCAPCD a completed *Asbestos Demolition/Renovation Notification* form and comply with the *National Emission Standards for Hazardous Air Pollutants—Asbestos* during all demolition activities for the removal of the *Overhead*. Demolition notifications are required regardless of whether asbestos is present or not.

Plan Requirements and Timing: The contractor shall provide written verification that a completed *Asbestos Demolition/Renovation Notification* form has been submitted to the SBCAPCD. In addition, all demolition activities shall comply with the *National Emission Standards for Hazardous Air Pollutants—Asbestos*. The completed notification should be presented or mailed to the Santa Barbara County Air Pollution Control District within a minimum of 10 working days advance notice prior to disturbing asbestos in a renovation or starting work on a demolition. These requirements shall be met prior to the start of demolition.

Monitoring: The City's construction manager or representative shall monitor in the field for compliance.

6.2 RECOMMENDED MEASURES

AQ-6 Dust generated by construction and/or demolition activities shall be kept to a minimum in accordance with Caltrans Standard Specifications, Section 14-9.03 and Air Quality District Rule 345.

Plan Requirements: The following dust control measures listed below shall be implemented by the contractor:

a. During clearing, grading, earth moving, excavation, or transportation of cut or fill materials, water trucks or sprinkler systems are to be used to prevent dust from leaving the site and to create a crust after each day's activities cease.

b. During construction, water trucks or sprinkler systems shall be used to keep all areas of vehicle movement damp enough to prevent dust from leaving the site (dust emissions at the property line shall not exceed 20% opacity more than an aggregate of 3 minutes in any 60 minute period). At a minimum, this would include wetting down such areas in the late morning and after work is completed for the day. Increased watering frequency shall occur whenever wind exceeds 15 miles per hour. If wind speeds increase to the point

when such measures cannot prevent dust from leaving the site, construction activities shall be suspended.

c. Grading and scraping operations shall be suspended when wind speeds exceed 20 mph.

d. Gravel pads, knock-off plates, or similar best management practices (BMP), shall be installed at all access points to the project site to prevent tracking of mud onto roadways.

e. Soil stockpiled for more than two days shall be covered, kept moist, or treated with soil binders to prevent dust generation. Trucks transporting soil material to and from the site shall be tarped from the point of origin.

f. All gravel, dirt, and construction material shall be cleaned from the right-of-way at a minimum of once a day at the end of the work day.

g. After clearing, grading, earth moving, and/or excavation is complete, the disturbed area shall be treated by watering, or revegetating, or by spreading soil binders until the area is paved or otherwise developed in a manner that prevents dust generation. The City's construction manager or representative shall ensure that the construction contractor designates a person or persons to monitor the dust control program and to order increased watering as necessary to prevent transport of dust off-site. Their duties shall include holiday and weekend periods when work may not be in progress.

Plan Requirements and Timing:

All of the aforementioned requirements shall be included in the construction specifications.

Monitoring: City's construction manager or representative shall perform periodic site inspections to verify compliance as well as contact the designated monitor as necessary to verify compliance with dust control measures.

AQ-7 Grading and construction contracts must specify that contractors shall adhere to the requirements that reduce emissions of ozone precursors and particulate emissions from diesel exhaust:

a. Diesel construction equipment meeting the CARB Tier 1 emission standards for off-road heavy-duty diesel engines shall be used. Equipment meeting CARB Tier 2 or higher emission standards should be used to the maximum extent feasible.

b. Diesel powered equipment should be replaced by electric equipment whenever feasible.

c. If feasible, diesel construction equipment shall be equipped with selective catalytic reduction systems, diesel oxidation catalysts, and diesel particulate filters as certified and/or verified by CARB or the EPA.

d. Catalytic converters shall be installed on gasoline-powered equipment, if feasible.

e. All construction equipment shall be maintained in tune per the manufacturer's specifications.

f. The engine size of construction equipment shall be the minimum practical size.

g. The number of construction equipment operating simultaneously shall be minimized through efficient management practices to ensure that the smallest practical number is operating at any one time.

h. Construction worker trips should be minimized by requiring carpooling and by providing for lunch on-site.

Plan Requirements and Timing: City staff shall ensure construction contract specifications include these measures, including provision for construction management reports to verify compliance.

Monitoring: City's construction manager or representative shall verify compliance with requirements for printing the aforementioned construction emission requirements in all construction specifications.

AQ-8 Diesel fuel emissions shall be limited.

Plan Requirements and Timing: The following limitations on diesel-fueled vehicles in excess of 10,000 pounds shall apply during all construction and subsequent operational activities:

a. Diesel-fueled vehicles in excess of 10,000 pounds shall not idle in one location for more than five minutes at a time.

b. Diesel-fueled vehicles in excess of 10,000 pounds shall not use diesel fueled auxiliary power units for more than five (5) minutes to power heater, air conditioner, or other ancillary equipment on any such vehicle. These requirements shall be included in the construction specifications.

Monitoring: The City's construction manager or representative shall monitor in the field for compliance.

AQ-9 Transport of all exported cut material from the project implementation shall be tarped from the project site to the point of storage.

Plan Requirements and Timing: This requirement shall be included in construction specifications.

Monitoring: The City's construction manager or representative shall monitor in the field for compliance.

6.3 RESIDUAL IMPACT

With implementation of the above mitigation measures, residual project specific as well as project contributions to cumulative air quality impacts involving ROCs, NOX and PM10 would be considered less than significant.

7.0 REFERENCES

CalEEMod. 2013. (version 2013.2.2) California Emissions Estimator Model. Available online at: http://www.caleemod.com

2011a. EMFAC2011 Motor Vehicle Emission Inventory Model. Available online at: http://www.arb.ca.gov/msei/categories.htm#offroad_motor_vehicles

2011. OFFROAD2011 Emissions Model. Available online at: http://www.arb.ca.gov/msei/offroad/offroad.htm.

Santa Barbara County Air Pollution Control District. 2011. Scope and Content of Air Quality Sections in Environmental Documents. December.

City of Goleta, City CEQA Thresholds Manual. County of Santa Barbara Environmental Thresholds and Guidelines Manual October 2002. Available online at: http://www.cityofgoleta.org/index.aspx?page=459

United States Environmental Protection Agency. AP-42, Compilation of Air Pollutant Emission Factors USEPA. http://www.epa.gov/ttnchie1/ap42/.

City of Goleta. Hollister Avenue Bridge Replacement Project, Project Description. Project no. BRLS-5481(013). Goleta, 2013. Print.

TABLES

TABLE 1
ONSITE AND OFF-SITE CONSTRUCTION EQUIPMENT (PIECES PER MONTH) FOR HOLLISTER BRIDGE

Equipment Type	HP	Month 1	Month 2	Month 3	Month 4	Month 5	Month 6	Month 7	Month 8	Month 9	Month10	Month 11	Month 12
Grader	175	1	1	1	1	1	1	1	1	1	1	1	1
Excavator	175	1	1	1	1	1	1	1	1	1	1	1	1
Drill Rigs	175	0	2	2	2	2	2	1	1	1	1	1	1
Crane	500	1	1	1	1	1	1	1	1	1	1	1	1
Concrete Pump Truck	250	0	1	1	1	1	1	1	1	1	1	1	1
Pumps	175	2	2	2	2	2	2	0	0	0	0	0	0
Forklifts	175	2	2	2	2	2	2	1	1	1	1	1	1
Tractors/Loaders/Backhoes	175	2	2	2	2	2	2	2	2	2	2	2	2
Water Truck	250	1	1	1	1	1	1	1	1	1	1	1	1
Air Compressor	175	2	2	2	2	2	2	2	2	2	2	2	2
Paving Equipment	175	1	1	1	1	1	1	1	1	1	1	1	1
Off Highway Trucks	250	2	2	2	2	2	2	2	2	2	2	2	2
Other General Industrial Equipment	175	2	2	2	2	2	2	2	2	2	2	2	2
Total	**–**	**17**	**20**	**20**	**20**	**20**	**20**	**16**	**16**	**16**	**16**	**16**	**16**

CONTINUED ON NEXT PAGE →

TABLE 1 (CONTINUED)
ONSITE AND OFF-SITE CONSTRUCTION EQUIPMENT (PIECES PER MONTH) FOR HOLLISTER BRIDGE

Equipment Type	HP	Month 13	Month 14	Month15	Month 16	Month 17	Month 18	Month 19	Month 20	Month 21	Month 22	Month 23	Month 24
Grader	175	1	1	1	1	1	1	1	1	1	1	1	1
Excavator	175	1	1	1	1	1	1	1	1	1	1	1	1
Drill Rigs	175	1	1	1	1	1	1	0	0	0	0	0	0
Crane	500	1	1	1	1	1	1	0	0	0	0	0	0
Concrete Pump Truck	250	1	1	1	1	1	1	1	1	1	1	1	1
Pumps	175	2	2	2	2	2	2	0	0	0	0	0	0
Forklifts	175	2	2	2	2	2	2	1	1	1	1	1	1
Tractors/Loaders/Backhoes	175	2	2	2	2	2	2	1	1	1	1	1	1
Water Truck	250	1	1	1	1	1	1	1	1	1	1	1	1
Air Compressor	175	2	2	2	2	2	2	1	1	1	1	1	1
Paving Equipment	175	1	1	1	1	1	1	1	1	1	1	1	1
Off Highway Trucks	250	2	2	2	2	2	2	1	1	1	1	1	1
Other General Industrial Equipment	175	2	2	2	2	2	2	1	1	1	1	1	1
Total	**–**	**19**	**19**	**19**	**19**	**19**	**19**	**10**	**10**	**10**	**10**	**10**	**10**

TABLE 2
CONSTRUCTION LABOR FORCE (LABORERS PER MONTH WITH SUPERVISION) FOR HOLLISTER BRIDGE REPLACEMENT

	Working hours Per Day	Working Days per Week	Workforce Estimates
Month 1	10	6	20
Month 2	10	6	20
Month3	10	6	20
Month 4	10	6	20
Month 5	10	6	20
Month 6	10	6	20
Month 7	8	5	10
Month 8	8	5	10
Month 9	8	5	10
Month 10	8	5	10
Month 11	8	5	10
Month 12	8	5	10
Month 13	10	6	20
Month 14	10	6	20
Month15	10	6	20
Month 16	10	6	20
Month 17	10	6	20
Month 18	10	6	20
Month19	8	5	8
Month 20	8	5	8
Month 21	8	5	8
Month 22	8	5	8
Month 23	8	5	8
Month 24	8	5	8

TABLE 3

OFF-SITE CONSTRUCTION DELIVERY ACTIVITY (ONE WAY TRIPS PER MONTH) FOR HOLLISTER AVENUE BRIDGE REPLACEMENT

Vehicle Type	Material Delivery Trucks[1]	Import/Export Trucks[2]
Month 1	260	92
Month 2	260	206
Month3	270	194
Month 4	260	19
Month 5	260	16
Month 6	270	14
Month 7	168	14
Month 8	184	14
Month 9	168	14
Month 10	168	14
Month 11	184	14
Month 12	168	14
Month 13	250	403
Month 14	260	408
Month15	260	19
Month 16	270	16
Month 17	260	14
Month 18	260	14
Month 19	88	14
Month 20	88	14
Month 21	88	14
Month 22	80	11
Month 23	92	0
Month 24	80	0

[1]Heavy Heavy Duty Diesel (80,000 lbs gross vehicle weight).

[2] CalEEMod Default trips per cubic yard of material

TABLE 4
OVERALL CONSTRUCTION EMISSIONS
FOR HOLLISTER AVENUE BRIDGE REPLACEMENT

Criteria Pollutant	2015 Unmitigated Construction Sources (tons/yr)	2016 Unmitigated Construction Sources (tons/yr)	2017 Unmitigated Construction Sources (tons/yr)	Total Unmitigated Construction Sources (tons)
Carbon Monoxide (CO)	7.81	9.52	1.46	18.79
Oxides of Nitrogen (NO_x)	12.65	14.78	2.26	29.68
Reactive Organic Compounds (ROC)	1.18	1.40	0.22	2.79
Oxides of Sulfur (SO_x)	0.01	0.02	0.002	0.04
Particulate Matter (PM_{10}) [1]	0.71	0.85	0.13	1.69
Particulate Matter ($PM_{2.5}$) [1]	0.58	0.68	0.11	1.36

Note: [1] Exhaust and Fugitive Dust.

TABLE 5
MAXIMUM DAILY CONSTRUCTION EMISSIONS
FOR HOLLISTER AVENUE BRIDGE
REPLACEMENT

Criteria Pollutant	Unmitigated Construction Sources (lb/day)
Carbon Monoxide (CO)	88.08
Oxides of Nitrogen (NO_x)	139.88
Reactive Organic Compounds (ROC)	12.97
Oxides of Sulfur (SO_x)	0.16
Particulate Matter (PM_{10}) [1]	7.89
Particulate Matter ($PM_{2.5}$) [1]	6.31

FIGURES

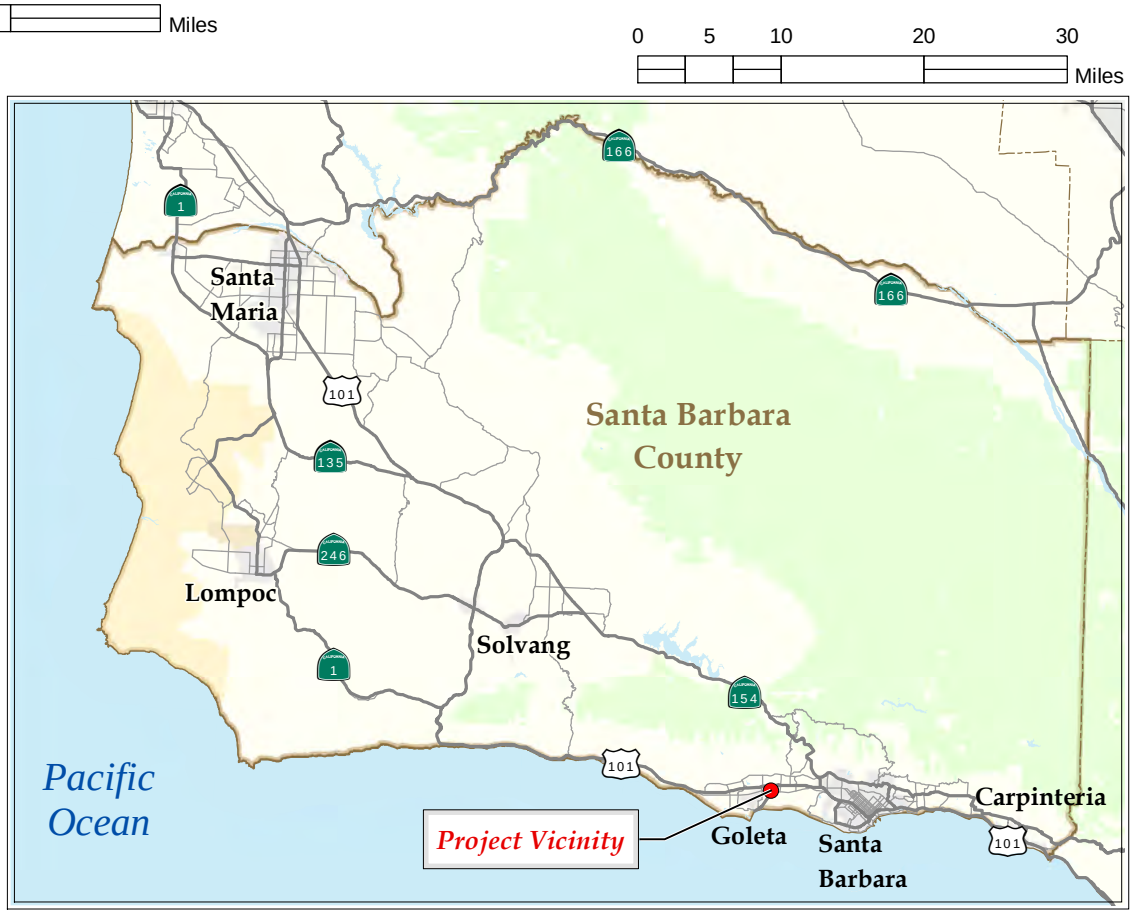

Hollister Avenue Bridge Replacement Project City of Goleta, CA 05-SB-0-GLTA BRLS-5481 (013)	**Source:** [1] The layer, below 1:3m, presents the 50 states, the District of Columbia, and Puerto Rico of the United States. It provides detailed boundaries that are consistent with the block group, tract, and county data sets and are	**Figure 1.** PROJECT VICINITY	2013
URS Corporation			

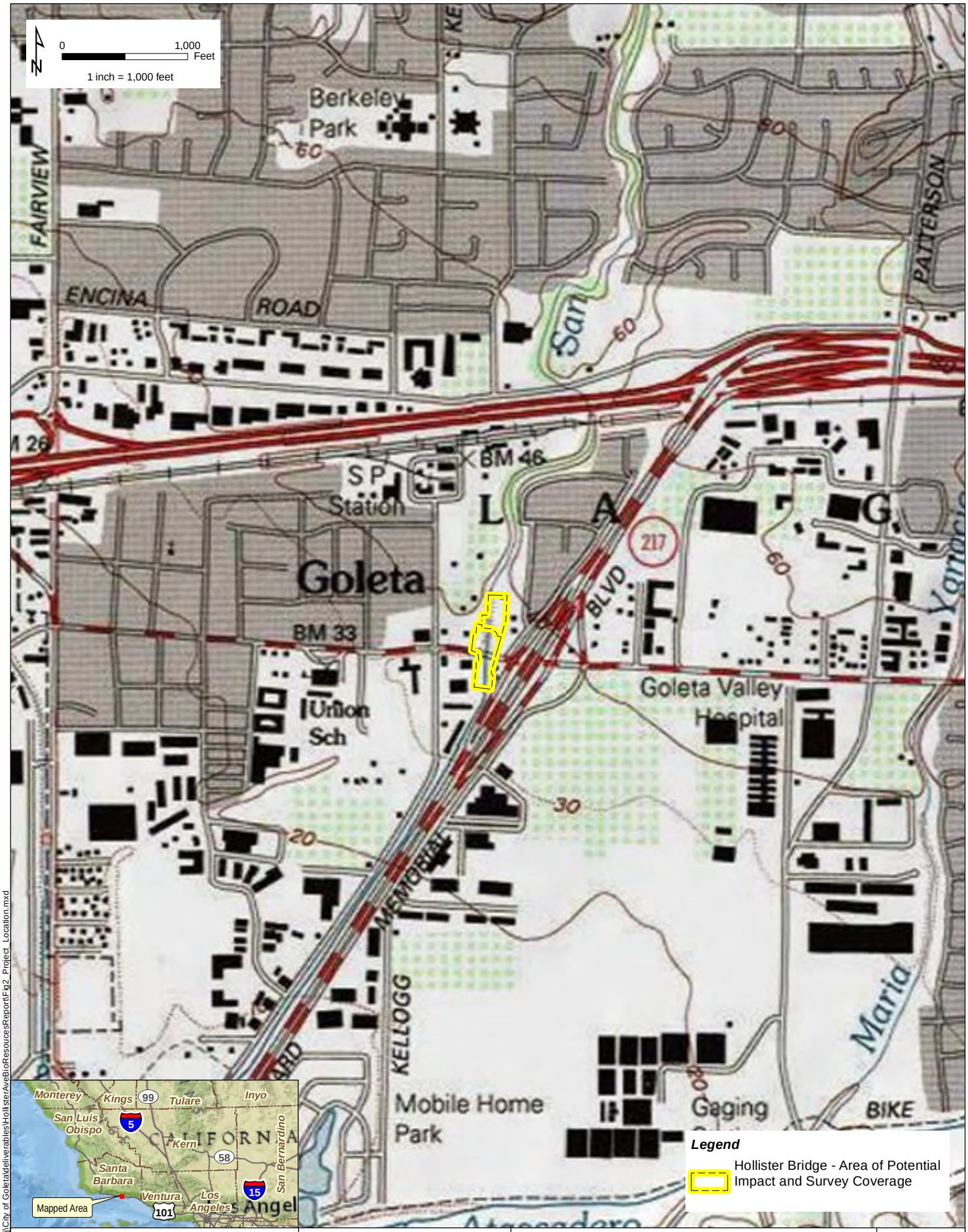

V:\Projects\GIS_Proj\City of Goleta\deliverables\HollisterAveBioResoucesReport\Fig2_Project_Location.mxd

Hollister Avenue
Bridge Replacement Project
City of Goleta, CA
05-SB-0-GLTA BRLS-5481 (013)

URS Corporation

Source: [1] Seamless, scanned images of United States Geological Survey (USGS) paper topographic 1:24,000 scale,Goleta Quad 1988, Copyright: 2013 National Geograpic Society, i-cubed.

Figure 2. PROJECT LOCATION AND SURVEY COVERAGE

2014

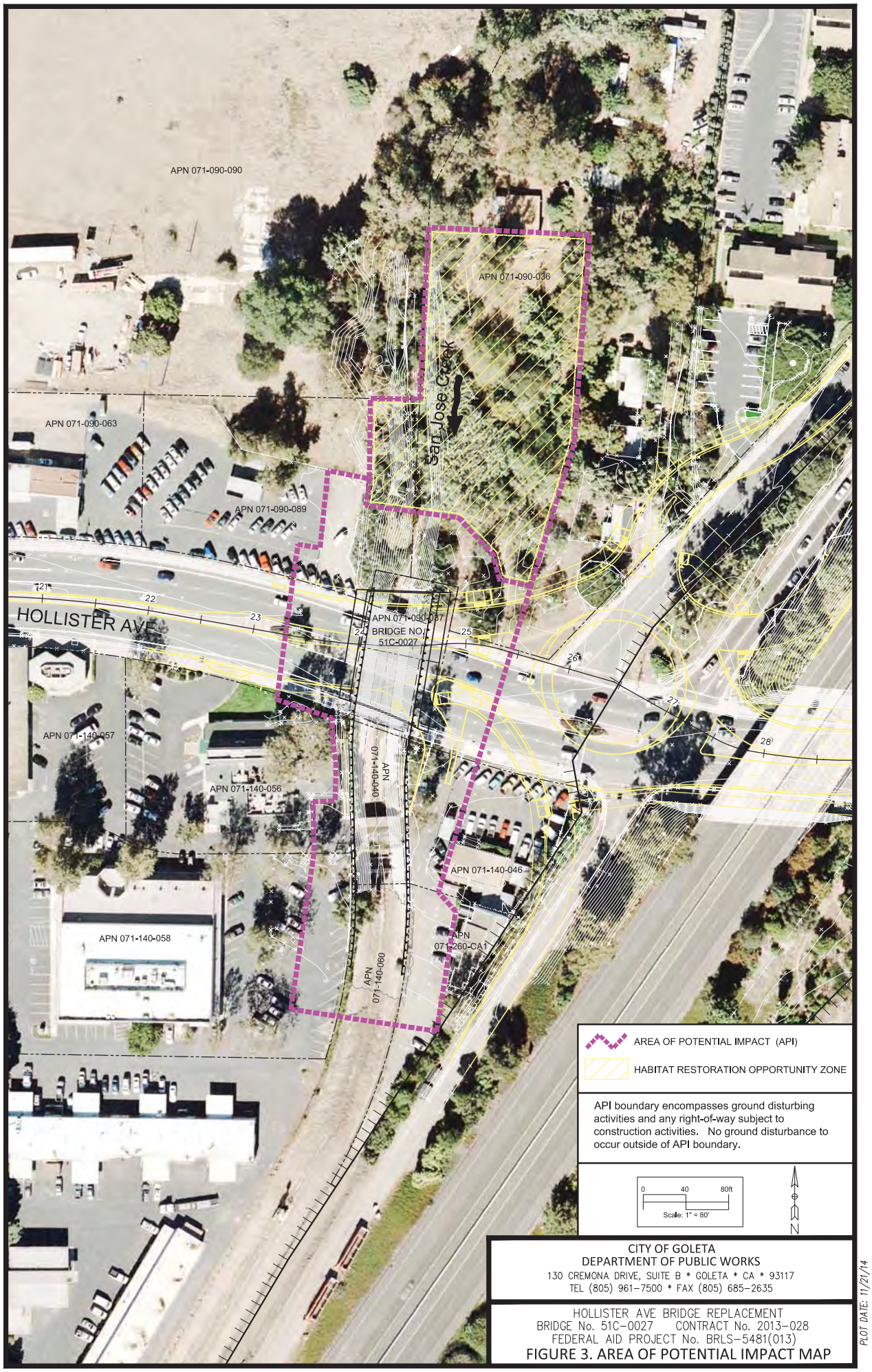

CITY OF GOLETA
DEPARTMENT OF PUBLIC WORKS
130 CREMONA DRIVE, SUITE B * GOLETA * CA * 93117
TEL (805) 961-7500 * FAX (805) 685-2635

HOLLISTER AVE BRIDGE REPLACEMENT
BRIDGE No. 51C-0027 CONTRACT No. 2013-028
FEDERAL AID PROJECT No. BRLS-5481(013)

FIGURE 3. AREA OF POTENTIAL IMPACT MAP

PLOT DATE: 11/21/14

APPENDIX C
BIOLOGICAL RESOURCES SUMMARY REPORT

DRAFT

BIOLOGICAL RESOURCES SUMMARY REPORT

FOR THE HOLLISTER AVENUE BRIDGE REPLACEMENT PROJECT

GOLETA, CALIFORNIA

Prepared for:

CITY OF GOLETA
130 Cremona Drive
Goleta, California 93117

Prepared by:

URS
130 Robin Hill Road, Suite 100
Santa Barbara, California 93117
(805) 692-0600 ◆ Fax: (805) 964-0259

URS Project Number 28907448

December 2014

TABLE OF CONTENTS

Section **Page**

1.0 SUMMARY 1-1
2.0 INTRODUCTION 2-1

2.1 PURPOSE AND NEED 2-1
2.2 PROJECT DESCRIPTION 2-1

2.2.1 Demolition and Construction 2-4
2.2.2 Right-of-Way 2-6
2.2.3 Utilities 2-7
2.2.4 Habitat Restoration 2-7
2.2.5 Construction Schedule and Timing 2-7

3.0 STUDY METHODS 3-1
4.0 ENVIRONMENTAL SETTING 4-1

4.1 DESCRIPTION OF THE EXISTING BIOLOGICAL AND PHYSICAL CONDITIONS 4-1
4.2 REGIONAL SPECIES AND HABITATS OF CONCERN 4-3

4.2.1 Southern Tarplant (*Centromadia parryi* ssp. *australis*) 4-3
4.2.2 Steelhead – Southern California Distinct Population Segment (*Oncorhynchus mykiss*) 4-3
4.2.3 California Red-legged Frog (*Rana draytonii*) 4-3
4.2.4 Least Bell's Vireo (*Vireo bellii pusillus*) 4-5
4.2.5 Warbling Vireo (*Vireo gilvus*) 4-5
4.2.6 Wilson's Warbler (*Wilsonia pusilla*) 4-6
4.2.7 Yellow Warbler (*Dendroica petechia*) 4-6
4.2.8 Swallows 4-6
4.2.9 Bats 4-8

4.3 VEGETATION 4-9

4.3.1 Waters of the U.S. and CDFW-jurisdictional Streambeds 4-12
4.3.2 Trees 4-14

5.0 PROJECT IMPACTS 5-1

5.1 TEMPORARY VS. PERMANENT IMPACTS 5-1

Section **Page**

5.2 REMOVAL OF RIPARIAN VEGETATION 5-1
5.3 REMOVAL OF MATURE NATIVE TREES 5-1
5.4 REMOVAL OF MATURE NON-NATIVE TREES 5-2
5.5 IMPACTS TO WATERS OF THE U.S. AND CDFW-JURISDICTIONAL STREAMBEDS 5-2
5.6 IMPACTS TO COMMON ANIMALS 5-2
5.7 IMPACTS TO CALIFORNIA RED-LEGGED FROG 5-2
5.8 IMPACTS TO STEELHEAD 5-3
5.9 IMPACTS TO BREEDING BIRDS 5-3
5.10 IMPACTS TO WILDLIFE MOVEMENT 5-3
5.11 IMPACTS TO AQUATIC HABITAT IN SAN JOSE CREEK AND GOLETA SLOUGH 5-4

6.0 MITIGATION MEASURES 6-1

6.1 CUMULATIVE IMPACTS 6-3

7.0 PERMITS REQUIRED 7-1

7.1 THREATENED AND ENDANGERED SPECIES 7-1
7.2 WATERS OF THE U.S. AND CDFW-JURISDICTIONAL STREAMBEDS, WETLANDS, AND OTHER WATERS 7-1

8.0 REFERENCES 8-1

Figures

Figure 1 Project Vicinity 2-2
Figure 2 Project Location and Survey Coverage 2-3
Figure 3 Area of Potential Impact Map 4-2
Figure 5 Vegetation 4-4
Figure 6 Wetlands and Waters Jurisdictional Determination 4-10
Figure 4 Special-status Species in the Project Vicinity 4-13

Appendices

Appendix A Federal Agency Determinations Regarding Southern Steelhead
Appendix B Delineation of Aquatic Resources
Appendix C Tree Survey Data
Appendix D Report of Work for Bat Surveys and Mitigation Development for Hollister Avenue Bridge over San Jose Creek
Appendix E Site Photographs
Appendix F Species Observed

SECTION 1.0
SUMMARY

The existing Hollister Avenue Bridge over San Jose Creek is a single-span bridge measuring 104 feet wide and 45 feet long. It has a Sufficiency Rating of 68.6 and is classified as functionally obsolete by the Caltrans Office of Structure Maintenance. The bridge was constructed using reactive aggregate and there is significant cracking in the deck and pile cap/beam. The bridge can only convey 25-year flood flows and is a contributing factor to flooding that occurs in Goleta's Old Town area. The project consists of replacement of the existing bridge with a new single span bridge that will be approximately 68 feet long, approximately 106 feet wide on the west end and approximately 130 feet wide on the east end. The new bridge is being designed to improve the capacity of the channel to provide for 100-year floods and meet current design standards. The project would also be designed to facilitate upstream steelhead migration.

Within the southern Area of Potential Impact (API), the project would remove approximately 0.22 acre of arroyo willow thickets (*Salix lasiolepis* Shrubland Alliance), including approximately 35 arroyo willows (*Salix lasiolepis*) and associated vegetation on the north side of the existing Hollister Avenue bridge. This vegetation community is considered sensitive, and meets the City of Goleta's adopted wetland definition (County of Santa Barbara 2002). The project could also result in the removal of two large specimen coast live oak (*Quercus agrifolia*) trees, two large specimen western sycamores (*Platanus racemosa*), and approximately 35 arroyo willows, and six horticultural or non-native trees, including three southern California black walnut trees (*Juglans californica*). The project would permanently impact 0.06 acre of U.S. Army Corps of Engineers (USACE) non-wetland waters of the U.S. within existing concrete channel and 0.015 acre of natural channel. The project would temporarily impact 0.031 acre of natural channel, of which 0.03 acre occurs within the Habitat Restoration Opportunity Zone. This project will permanently impact 0.11 acre of California Department of Fish and Wildlife (CDFW) jurisdictional streambed within existing concrete channel and 0.10 acre of natural streambed. The project would temporarily impact 0.29 acre of CDFW-jurisdictional streambed, of which 0.26 acre occurs within the Habitat Restoration Opportunity Zone. It is unlikely to impact California red-legged frog as this species is unlikely to occur in the Area of Potential Impact. Bird Species of Special Concern could nest within the Area of Potential Impact, but are unlikely to do so. The project would result in short-term impacts to the Southern steelhead and associated critical habitat, which would be avoided through a combination of construction timing and water quality control practices. In the long term, the project's effects on steelhead are expected to be positive because it will widen the channel under the new bridge thereby improving the capacity for steelhead to migrate upstream to spawn.

Mitigation measures include planting of replacement trees, preparation and implementation of a habitat restoration plan, pre-construction surveys, monitoring during vegetation removal,

implementation of erosion control, and other best management practices (BMP). All of the significant impacts would be mitigated to a less than significant level.

SECTION 2.0
INTRODUCTION

The City of Goleta proposes replacement of the existing 4-lane Hollister Avenue Bridge over San Jose Creek with a new bridge. The project is in the City of Goleta, in Santa Barbara County, California. It is adjacent to the State Route 217/Hollister Avenue Interchange (Figure 1 and Figure 2).

2.1 PURPOSE AND NEED

The existing Hollister Avenue Bridge over San Jose Creek has a Sufficiency Rating of 68.6 and is classified as functionally obsolete by Caltrans Office of Structure Maintenance (Caltrans 2013). The bridge was constructed using reactive aggregate and there is significant cracking in the deck and pile cap/beam. The triggering deficiency resulting in the need for bridge replacement is waterway adequacy. The bridge can only convey 25-year flood flows and is a contributing factor to flooding that occurs in Goleta's Old Town area, while the bridges upstream can convey a 100-year storm.

The purpose of the Project is to replace the existing Hollister Avenue Bridge with a new bridge that will convey 100-year storm flows and meet current design standards providing a safe crossing over San Jose Creek for vehicles and pedestrians.

The project also would improve the channel under the bridge to provide for upstream steelhead migration passage.

2.2 PROJECT DESCRIPTION

The existing bridge will be replaced with a new bridge (approximately 68 feet long) that will clear span the creek. The typical roadway section will consist of four 12-foot-wide through traffic lanes, bicycle lanes/shoulders, 10-foot-wide sidewalks and a median. The bridge type will be a cast-in-place post-tensioned concrete slab. The centerline of the new bridge alignment is oblique and slightly upstream compared to the centerline of the existing bridge.

The new foundations and abutments will be constructed behind the existing abutments. The abutments will be supported on cast-in-drilled-hole (CIDH) piles. Driven pile foundations will not be used due to the resulting noise and vibration impacts. The new abutment walls will act as the channel walls within the limits of the new bridge.

This project will also widen the San Jose Creek channel immediately downstream of the new bridge so that the channel conveys 100-year flood flows and conforms to constructed portions of the San Jose Creek Capacity Improvement and Fish Passage Project (previously referred to as the San Jose Creek Capacity Improvement Project). The existing concrete lined trapezoidal shaped channel will be replaced with a wider channel with vertical walls.

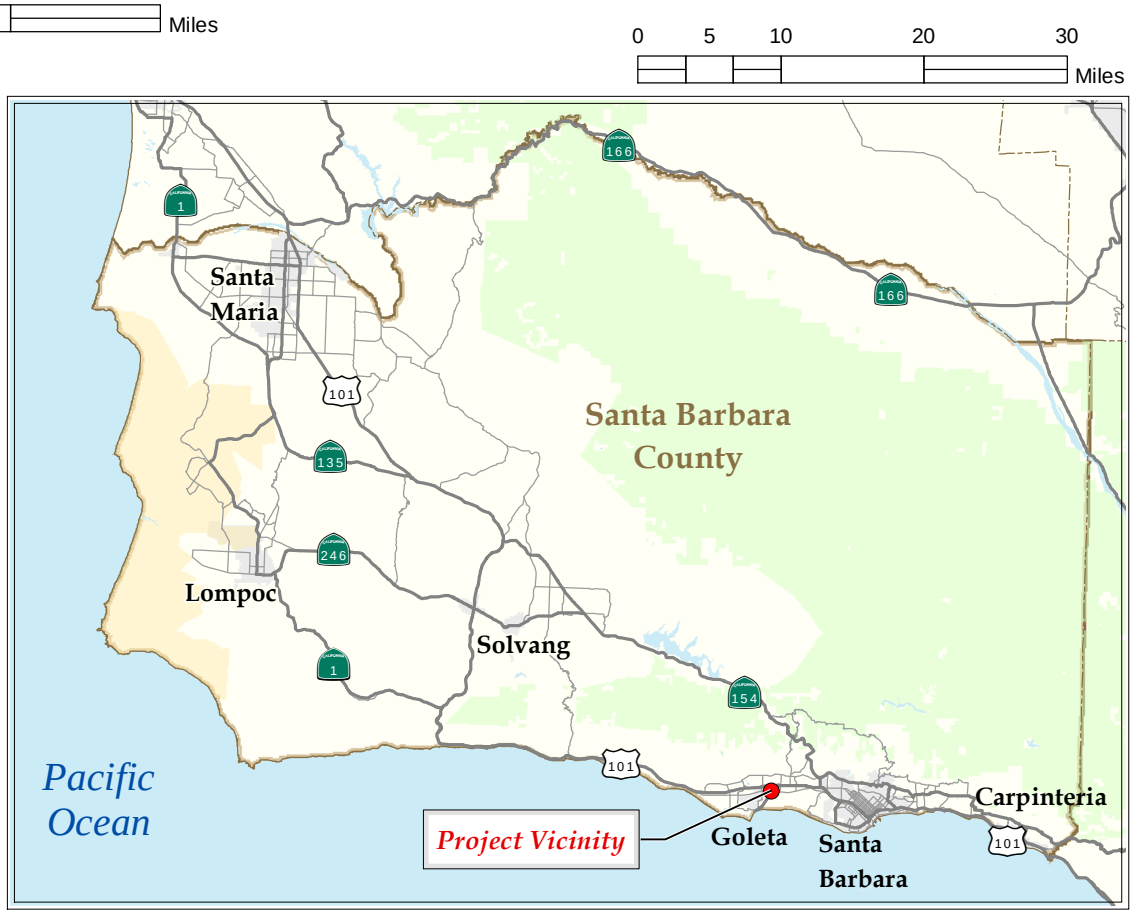

V:\Projects\GIS_Proj\City of Goleta\deliverables\HollisterAveBioResoucesReport\Fig1_Project_Vicinity.mxd

Hollister Avenue **Bridge Replacement Project** **City of Goleta, CA** **05-SB-0-GLTA BRLS-5481 (013)** URS Corporation	**Source:** [1] The layer, below 1:3m, presents the 50 states, the District of Columbia, and Puerto Rico of the United States. It provides detailed boundaries that are consistent with the block group, tract, and county data sets and are	**Figure 1.** PROJECT VICINITY	2014

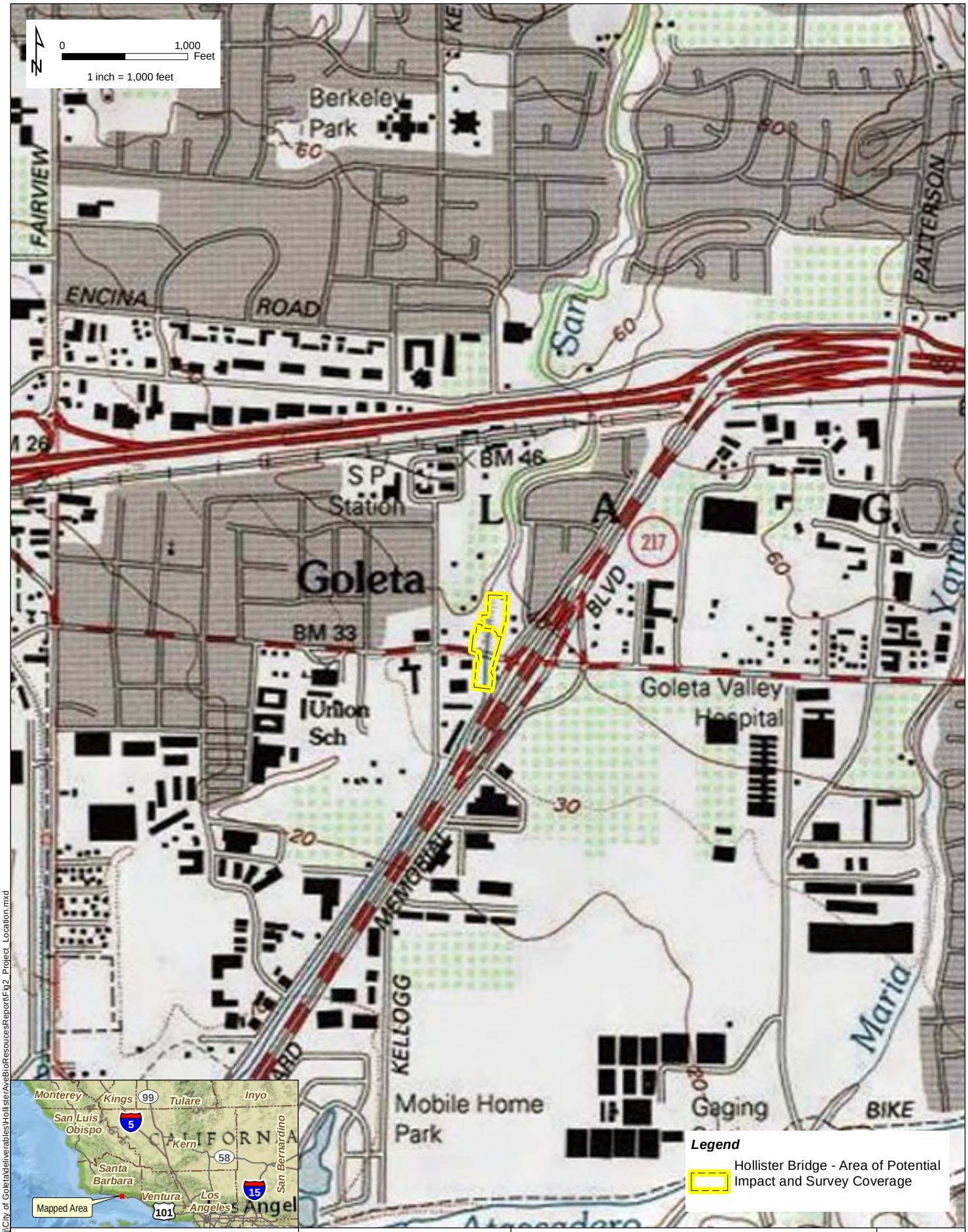

V:\Projects\GIS_Proj\City of Goleta\deliverables\HollisterAveBioResoucesReport\Fig2_Project_Location.mxd

Hollister Avenue
Bridge Replacement Project
City of Goleta, CA
05-SB-0-GLTA BRLS-5481 (013)

URS Corporation

Source: [1] Seamless, scanned images of United States Geological Survey (USGS) paper topographic 1:24,000 scale,Goleta Quad 1988, Copyright: 2013 National Geograpic Society, i-cubed.

Figure 2. PROJECT LOCATION AND SURVEY COVERAGE

2014

Cantilever walls utilizing steel reinforced drilled shafts will be used for the channel walls. The channel bottom will be protected with articulated concrete mats, with provisions for fish passage as previously approved in the environmental document and resource agency permits for the San Jose Creek Capacity Improvement and Fish Passage Project.

A privately owned steel bridge located about 100 feet south of the Hollister Avenue Bridge will continue to be utilized for as long as possible to provide vehicular access to the businesses located south of Hollister Avenue and between San Jose Creek and the State Route 217 southbound on-ramp, but ultimately will be removed as part of the Project.

The project was reviewed by the USACE and the U.S. National Marine Fisheries Service (NMFS) as part of their reviews of the San Jose Creek Capacity Improvement and Fish Passage Project. The USACE determined that the project may affect but would not likely adversely affect Southern steelhead and its designated critical habitat in San Jose Creek (Appendix A).

NMFS concluded that the project is expected to be beneficial to steelhead as its implementation is expected to significantly improve fish passage conditions at this location (Appendix A).

This project also consists of constructing the transition from the improved and wider San Jose Creek channel constructed downstream from the bridge as part of the San Jose Creek Capacity Improvement and Fish Passage Project to the natural creek immediately upstream of the bridge. The privately-owned steel bridge will be used to provide access during some stages of construction to the parcels located southeast of the Hollister Avenue Bridge. The existing driveway off of Hollister Avenue to these properties will be closed during some stages of construction, and relocated to the west and partially onto the new bridge to fit with the alignment of the new proposed roundabout located directly east of the bridge. In addition, a portion of the channel wall may need to be designed as a cantilever bridge deck to support the driveway over the creek.

2.2.1 Demolition and Construction

In-stream work will consist of removing all of the vegetation, removing the existing abutments, removing the existing channel lining and walls, constructing new channel walls, placement of articulated revetment at the bottom of the creek, constructing new abutments, and placing falsework. (Falsework is a temporary structure that supports the main structure during construction.) All in-stream work will be conducted during the dry season, between May 15 and October 15.

Excavation at abutments and channel walls will require dewatering. Groundwater and seepage in the dewatered area would be removed in accordance with applicable water quality regulations. Water diversion methods may include the use of water bladders, sandbags, sheet

piling, pipes or coffer dams, or other structural methods approved by the Project Engineer and CDFW.

The water diversion infrastructure will be removed after the first dry season, then re-installed for the second dry season, and then reinstalled at the end of the second dry season. All stream diversion materials will be removed entirely from the project site once construction is complete. BMPs will be implemented during construction to prevent concrete or other materials from entering the channel.

Work that can be performed without having to be physically in the creek such as traffic control, grading, approach roadway modifications, and bridge barrier construction can be performed outside of this window.

Demolition of the existing bridge will be performed in accordance with the Caltrans Standard Specifications modified to meet environmental permit requirements. All concrete and other debris resulting from the demolition of the existing bridge will be removed from the project site and disposed of by the contractor. The construction contractor will be responsible for preparing a bridge demolition plan that conforms to the permit requirements.

Construction will include the following activities:

- Stage 1:
  - Tree removal and clearing and grubbing in the area of the new bridge and approaches
  - Diversion of San Jose Creek into a pipe through the construction site
  - Placement of k-rail and reducing and rerouting traffic to a minimum of one lane in each direction on the southern portion of the existing bridge
  - Temporary relocation of any utilities located on the northern portion of the existing bridge
  - Removal of northern portion of the existing bridge for its entire length to provide room to construct stage 1 of the new bridge
  - Saw cutting and removal of the existing channel walls and lining
  - Drilling holes, installing rebar cages and pouring concrete for CIDH piles
  - Constructing the new abutments and channel walls which will result in a depth of excavation no greater than 25 feet deep from the top of roadbed
  - Erecting falsework that will be placed between the channel walls
  - Placing superstructure concrete for Stage 1 portion of the new bridge
  - Relocation of utilities onto the stage 1 portion of the new bridge

- Removal of falsework from below Stage 1 portion of new bridge
- Constructing channel wall transition from new abutments to the natural creek bed immediately upstream of Hollister Avenue
- Constructing the new roadway approaches including grading, compacting, raising existing utility manholes, and placing aggregate base and asphalt concrete pavement

- Stage 2:
  - Routing westbound traffic onto the just completed Stage 1 section of the new bridge so that traffic in each direction can be maintained using the Stage 1 portion of the new bridge and the southern portion of existing bridge for the time period between the in-creek work windows
  - Prior to the start of the second in-creek work window, reroute traffic off of the existing bridge and route both directions of traffic to the Stage 1 portion of the new bridge (minimum of 1 lane in each direction)
  - Removal of the remaining portion of the existing bridge
  - Installing CIDH piles, constructing new abutments, erecting falsework and placing superstructure concrete for the remaining portion of the new bridge (Stage 2)
  - Removal of the privately owned steel bridge and construction of channel walls from the new bridge to conform to the improved and wider San Jose Creek channel constructed as part of the San Jose Creek Capacity Improvement and Fish Passage Project
  - Construction of replacement driveway east of San Jose Creek
  - Removal of falsework from the channel
  - Installing articulated revetment at bottom of creek and removing diversion pipe
  - Constructing the remaining portion of the new roadway approaches including grading, compacting, and placing aggregate base and asphalt concrete pavement

2.2.2 Right-of-Way

There are up to seven properties that could be permanently impacted by the project: APN 071-090-089 (DLC Enterprises, Inc.), APN 071-090-037 (County of Santa Barbara), APN 071-090-036 (Newland), APN 071-260-CA1, and APNs 071-140-046, 071-140-056, and 071-140-058 (Bottiani Properties). Acquisitions from these properties as well as the potential for utility easements are likely. It is assumed that the contractor will use the closed portions of the roadway approaches as a staging area.

2.2.3 Utilities

There are a number of utilities located under the existing bridge structure that will need to be relocated. A 6-inch-diameter gas line, water line, fiber optic, and telecommunication lines are located under the sidewalk on the north side of the existing bridge. Telecommunication and electrical lines are located under the sidewalk on the south side of the existing bridge. At each corner of the bridge, storm drainage lines run underneath the roadway approaches and empty out into San Jose Creek. Properties located southeast of the Hollister Avenue Bridge are currently being serviced by an 8-inch sewer line that runs underneath the privately owned steel bridge that is located about 100 feet south of Hollister Avenue. Since the privately owned steel bridge will be removed as part of this project, the sewer line will need to be relocated to provide service to those properties. Utilities will be relocated, but their precise locations have not yet been designed. Some may be relocated on or within the bridge while others may be relocated via directional boring under San Jose Creek.

2.2.4 Habitat Restoration

A small amount of riparian habitat will be disturbed or removed during construction. Habitat restoration, including manual removal of several stands of the invasive giant reed (*Arundo donax*) and manual installation of new native vegetation, would occur on-site within the Habitat Restoration Opportunity Zone (Figure 2). Subsurface ground disturbance during mitigation activities would be minimal and limited to manual removal of giant reed and use of shovels and other hand tools to install new native vegetation.

2.2.5 Construction Schedule and Timing

Construction of the proposed project is anticipated to take approximately 24 months to complete. It is anticipated that the project will start construction in spring 2016 and be completed by spring 2018. Work in the stream will be conducted during the dry season between May 15 and October 15.

SECTION 3.0
STUDY METHODS

URS biologists Christopher Julian and Julie Love conducted a survey of the flora on June 24, 2013. They walked through the southern Area of Potential Impact and made notes of all of the plant species that they observed. URS biologists Julie Love and Elihu Gevirtz conducted a jurisdictional determination and wetland delineation on October 8, 2013 using the *Corps of Engineers Wetland Delineation Manual* (Environmental Laboratory 1987) and its complement the *Regional Supplement to the Corps of Engineers Wetland Delineation Manual: Arid West Region* (USACE 2008) (Appendix B). A jurisdictional determination to refine boundaries that were within the construction zone due to the San Jose Creek Capacity Improvement and Fish Passage Project during the previous delineation effort was conducted on October 17, 2014 by URS biologist Billy Fletcher using the same methodology. A subsequent jurisdictional determination and wetland delineation was conducted for the Habitat Restoration Opportunity Zone by URS biologists Julie Love and Billy Fletcher on November 13, 2014 using the same methodology.

Vegetation communities were categorized using established systematic classification criteria described in Sawyer *et al*.'s *A Manual of California Vegetation*, Second Edition (Sawyer *et al*. 2009).

URS biologists Julie Love and Elihu Gevirtz conducted a tree survey on October 15, 2013, recording all of the tree species within the project area, diameter at breast height (DBH), and whether it was alive or dead (Appendix C). Incidental wildlife species that were observed were also documented. A subsequent native tree inventory was conducted within the Habitat Restoration Opportunity by URS biologist Julie Love and Billy Fletcher on November 13, 2014 using the same methodology. URS Biologist David Kisner visited the site and evaluated the suitability of the riparian habitat for least Bell's vireo within the project boundary on May 18, 2012. A bat survey under the Hollister Avenue Bridge was conducted on October 10, 2014 by Paul Heady (Central Coast Bat Research Group) and URS biologists. Detailed methodology for bat surveys are presented in Appendix D, two additional bat surveys will be conducted. One is planned for winter 2015 to document use of the bridge by winter roosting species and spring/summer 2015 to document potential maternity roosting acitivies. Furthermore, previous studies were also reviewed including surveys for California red-legged frog and other wildlife by SAIC (2007) and Entrix (2010).

SECTION 4.0
ENVIRONMENTAL SETTING

4.1 DESCRIPTION OF THE EXISTING BIOLOGICAL AND PHYSICAL CONDITIONS

San Jose Creek immediately upstream of the bridge structure is an intermittent stream that has an unvegetated sandy bed with some cobble and arroyo willow thicket on its steep banks. Within the Habitat Restoration Opportunity Zone, arroyo willow thickets and dense areas of giant reed occur on the stream banks. On the level terrace east of the creek (outside of the creek bank), there are mature coast live oaks and southern California black walnut trees (Figure 3). The walnut trees are native, but were probably planted in the past as part of a commercial walnut orchard, as a significant amount of land in Goleta was planted with commercial walnut orchards. The ground layer appears to have been repeatedly disturbed in the past by cultivation. This ground layer is vegetated almost entirely by non-native grasses and other non-native species. However, there are several arroyo willows (*Salix lasiolepis*) and a patch of mugwort (*Artemisia douglasiana*) on the terrace that are part of the arroyo willow thicket associated with the creek (See photographs in Appendix E).

In the area occupied by the existing bridge, San Jose Creek is confined by sloped concrete sides and a concrete channel bottom in a configuration similar to a box culvert with the bridge deck forming the roof. A concrete apron and wing walls serve as a transition between the concrete structure and the adjacent natural banks. The bridge structure is passable by terrestrial wildlife moving within the streambed during dry periods (the majority of the year), and appears passable by aquatic species provided flow conditions are appropriate. However, because the concrete channel bottom lacks features to concentrate or retard flows, flow beneath the bridge is likely characterized by higher velocities and lower depth than flow through natural portions of the creek. With the exception of a few herbaceous weeds growing through cracks in the concrete, vegetation is absent in this area.

Downstream of the existing bridge, construction of the San Jose Creek Capacity Improvement and Fish Passage Project was completed in 2013 (see photos in Appendix E). The concrete channel that formerly occupied this area has been removed, and construction of a widened channel with provisions for fish passage is ongoing. Under current conditions, the portion of the Area of Potential Impact downstream of the existing bridge is characterized by bare ground with significant human presence and disturbance resulting from active construction. Vegetation is not present in this area, and the current value for biological resources is low. A list of plant species observed in the Area of Potential Impact is provided in Appendix F-1. A cumulative list of animal species observed by SAIC (2007), Entrix (2010) and URS (2013 and 2014) is provided in Appendix F-2. An acorn woodpecker granary in a dead trunk of a western sycamore on the west side of the creek outside of the Area of Potential Impact was observed by URS. Additionally, one monarch butterfly

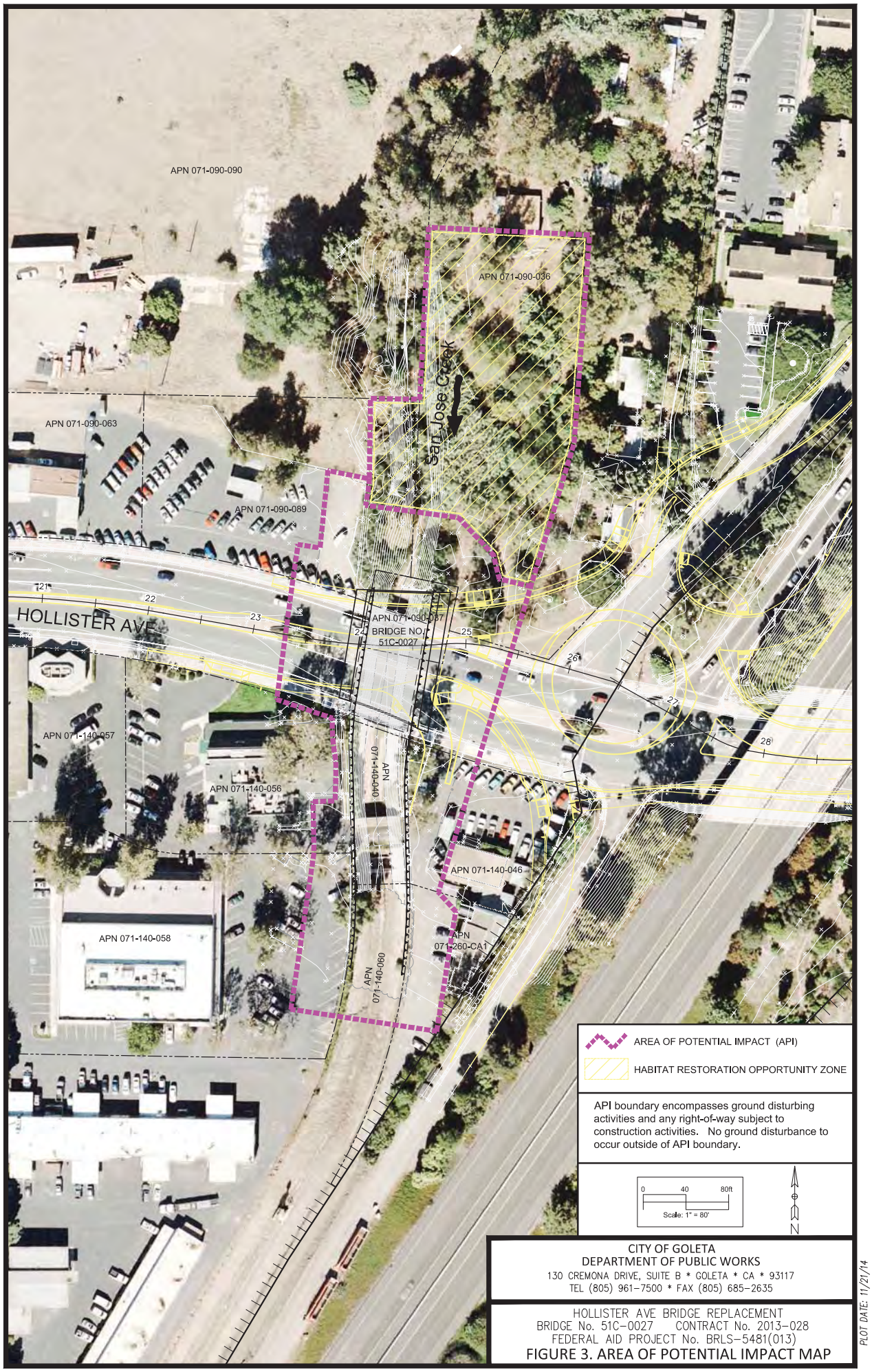

CITY OF GOLETA
DEPARTMENT OF PUBLIC WORKS
130 CREMONA DRIVE, SUITE B * GOLETA * CA * 93117
TEL (805) 961-7500 * FAX (805) 685-2635

HOLLISTER AVE BRIDGE REPLACEMENT
BRIDGE No. 51C-0027 CONTRACT No. 2013-028
FEDERAL AID PROJECT No. BRLS-5481(013)

FIGURE 3. AREA OF POTENTIAL IMPACT MAP

PLOT DATE: 11/21/14

(*Danaus plexippus*) was observed patrolling within the Habitat Restoration Opportunity Zone in November 2014. Because only one individual was observed and because neither autumnal nor wintering aggregations have been reported to occur within or in close proximity to the Area of Potential Impact, the site is not considered to be an aggregation site.

4.2 REGIONAL SPECIES AND HABITATS OF CONCERN

4.2.1 Southern Tarplant (*Centromadia parryi* ssp. *australis*)

This species is listed by the California Native Plant Society (CNPS) as Rank 1B.1, meaning that it is rare, threatened or endangered in California and elsewhere, and that it is seriously threatened (CNPS 2013). It occurs in salt marshes, grassland, vernal pools and coastal scrub. There are records of this species from the immediate vicinity from 1959 (Consortium of California Herbaria 2013 and California Natural Diversity Database [CNDDB]) (Figure 4). The site was visited by URS biologists during its flowering season (October 2013), when it has been observed in flower on other sites in the Goleta valley, and it was not observed. If it had been present on the site, it would have been observed. Therefore, this species is not expected to occur on the site.

4.2.2 Steelhead – Southern California Distinct Population Segment (*Oncorhynchus mykiss*)

The Southern California Distinct Population Segment (DPS) of steelhead (which includes all naturally-spawned steelhead in streams between the Santa Maria River and the Mexican border, and is coterminous with the Southern California Evolutionarily Significant Unit for the species) is listed by the federal government as Endangered and is identified by the CDFW as a California Species of Special Concern (CDFW 2011). The reach of San Jose Creek upstream of Hollister Avenue is designated Critical Habitat for this species. Until recently, the stretch of creek downstream of Hollister Avenue was lined with concrete and was a complete barrier to upstream movement of steelhead (Stoecker 2002). Construction is occurring presently in that portion of the creek channel (downstream of the project site) in order to increase flood conveyance capacity and provide a migration habitat design for steelhead. Spawning and rearing habitat is not present in the immediate vicinity of the project. The creek was dry at the time of the URS surveys in June and October 2013 and no steelhead were observed. The replacement bridge includes the same steelhead migration habitat design that is currently under construction downstream. The new bridge will span the creek and will be 23 feet longer than the current bridge, thus reducing channel constriction and facilitating upstream migration.

4.2.3 California Red-legged Frog (*Rana draytonii*)

This species is listed as threatened under the Endangered Species Act, and is a California Species of Special Concern (CDFW 2011). The project site is not within Critical Habitat for

Legend

Project Region (5-mile Radius)

Hollister Ave Bridge Project

Proposed Project Site

County Line

CNDDB November 2013

Plant

Animal

Terrestrial Community

Aquatic Community

Area of Potential Impact

7.5 Quad Index

CA Dept. of Parks and Recreation

CA State Managed Lands

7.5 Quads with Sensitive EOs

**Sensitive EOs are not mapped, but occur somewhere within the quad boundary*

N

0 1 2 Miles

1 inch equals 1 miles

Hollister Avenue
Bridge Replacement Project
City of Goleta, CA
05-SB-0-GLTA BRLS-5481 (013)

URS Corporation

Source: [1] CNDDB November 2014, [2] LADeptOfRegionalPlanning, 11-26-2007, [3] Tele Atlas North America, Inc./Geographic Data Technology, Inc., ESRI (2005-06-01), [4] Bing Maps Aerial Hybrid accessed November 2014.

Figure 4. Special-status Species in the Project Vicinity

2014

V:\Projects\GIS_Proj\City of Goleta\deliverables\HollisterAveBioResoucesReport\Fig4_CNDDB_Map.mxd

California red-legged frog. This species inhabits pools of water, including marshes, streams, lakes, reservoirs, and ponds. It breeds in ponded water, but outside of the breeding season it may also be found in a variety of upland habitats (Stebbins 2003). Surveys for this species conducted in 2005 in the immediate vicinity of the project did not result in observations of this species (SAIC 2007), and surveys conducted in 2010 also did not result in observations of this species (Entrix 2010). It was not observed by URS in 2013, and the CNDDB does not indicate any historic occurrences of this species within the San Jose Creek watershed (Figure 4). Based on this information, the California red-legged frog is not expected to occur within the Project area.

4.2.4 Least Bell's Vireo (*Vireo bellii pusillus*)

Least Bell's vireo is listed by both the federal and state governments as endangered (CDFW 2013). This species was formerly more common and widespread as a summer resident in Santa Barbara County and throughout much of coastal southern California and the Central Valley. It breeds in riparian habitat dominated by willow-cottonwood forests. The population has declined significantly due to loss of riparian habitat and brood parasitism by brown-headed cowbirds *(Molothrus ater)* (Lehman 2012). Breeding occurred in the past along the Santa Ynez River. A singing bird is recorded from Carneros Creek near the Santa Barbara Airport in Goleta in May and June 2010, and spring and summer wanderers were found along Atascadero Creek in Goleta in May and June 2002. This species is a casual fall migrant on the south coast with multiple records from Goleta and other coastal areas (Lehman 2012). URS conducted protocol surveys for least Bell's vireo for the City of Goleta's Ekwill/Fowler Project. The surveys were conducted along Old San Jose Creek, beginning roughly 650 feet southwest of current project site and heading southwest from that point. No least Bell's vireos were observed or heard in the survey area during the protocol survey. As part of this effort, URS visited the current project site and assessed the suitability of the riparian habitat for this species, and concluded that the habitat was not suitable based on habitat structure, canopy cover, aspect, and anthropomorphic disturbance (URS 2012).

4.2.5 Warbling Vireo (*Vireo gilvus*)

Warbling vireos usually nest in riparian systems with large, deciduous trees and a semi-open canopy. The west coast race, *V. g. swainsonii*, breeds from Baja California Norte northward to southeastern Alaska. In southern Santa Barbara County, and in coastal southern California in general, this species was formerly more common. Numbers have declined due to loss and degradation of riparian habitat and brood parasitism by brown-headed cowbird. Warbling vireo is known to breed along San Jose Creek north of US 101, and may have bred in recent years at Atascadero Creek, east of the project site (Lehman 2012). URS observed a possible pair of warbling vireos in riparian habitat along Old San Jose Creek 650 feet or more southwest of the current project site in May and June 2012 (URS 2012). However, no

warbling vireos were observed within the project area. Although nesting within the Area of Potential Impact is possible, it is unlikely.

4.2.6 Wilson's Warbler (*Wilsonia pusilla*)

Wilson's warblers breed in riparian vegetation, particularly areas with dense willows. They once were common breeders along the south coast but have declined in recent years, likely due to elimination and degradation of riparian habitat and brood parasitism by brown-headed cowbirds. They now only breed in small numbers on the south coast of Santa Barbara County (Lehman 2012). It is a common migrant in the area, but is an unlikely breeder within the Area of Potential Impact. No Wilson's warblers have been documented nesting in the area, and none were observed during the site visits.

4.2.7 Yellow Warbler (*Dendroica petechia*)

When breeding, yellow warblers are a California Species of Special Concern (CDFW 2011). Yellow warblers breed in brushy riparian woodlands containing willows, cottonwoods, big-leaf maple, California sycamore, elderberry, or white alder. Yellow warblers are primarily threatened by loss of riparian habitat and brood parasitism by brown-headed cowbirds. A yellow warbler was observed in May and June 2012 along Old San Jose Creek (URS 2012) roughly 650 feet or more southwest of the current project site. However, no yellow warblers have been documented nesting in the area, and none were observed within the Area of Potential Impact.

4.2.8 Swallows

Barn swallow (*Hirundo rustica*), cliff swallow (Petrochelidon pyrrhonota), and northern rough-winged swallow (*Stelgidopteryx serripnnis*) were observed by URS in the project vicinity, although none of these species were observed nesting on the bridge in 2012 (URS 2012). Similarly, no swallow nests were observed on the bridge in 2007 (SAIC 2007). The following text provides brief descriptions of the status and the part of their life histories that occurs along the south coast of Santa Barbara County.

4.2.8.1 Barn Swallow (*Hirundo rustica*)

Barn swallow is a common spring and fall transient on the south coast. This species is not listed. Barn swallows nest on bridges and other structures, typically within one half mile of the coast. Spring transients arrive on the south coast by late February and continue to move through the county into late May. Fall migrants appear at the end of July, are fairly common through mid-September, and are rare after October (Lehman 2013).

Barn swallows are protected under the federal Migratory Bird Treaty Act of 1918. Thus, it is illegal to remove completed nests during the breeding season without a permit from the U.S.

Fish and Wildlife Service. The barn swallow's protected status and its habit of nesting on bridges can create costly delays in construction on some bridge repair projects (Caltrans 2014)

4.2.8.2 Cliff Swallow (*Petrochelidon pyrrhonota*)

Cliff swallow is a common transient and summer resident in coastal Santa Barbara County. This species is not listed. Cliff swallows nest in large colonies under bridges, on buildings and rocky cliff faces. Spring migrants typically arrive in the coastal area in late February, although some arrive as early as the first week in February. It is uncommon in the local area by late August and is rare after the beginning of September, although some remain into October (Lehman 2013).

Cliff swallows are protected under the federal Migratory Bird Treaty Act of 1918. Thus, it is illegal to remove completed nests during the breeding season without a permit from the U.S. Fish and Wildlife Service. The cliff swallow's protected status and its habit of nesting on bridges can create costly delays in construction (Caltrans 2014).

In order to keep bridge construction and repair projects on schedule, Caltrans often installs netting to exclude barn swallows and cliff swallows prior to the birds' arrival. Due to resultant moratlity of swallows, this practice has been contested and Caltrans has subsequently agreed to use alternative measures on two bridges in northern California (Los Angeles Times 2014).

4.2.8.3 Northern Rough-winged Swallow (*Stelgidopteryx serripennis*)

Northern rough-winged swallow is a common transient and summer resident along the south coast. This species is not listed. Northern rough-winged swallow nest under bridges (including some in urban areas), in holes in steep banks and sea cliffs. Spring migrants appear as early as mid- to late February, although they can arrive as early as the first week of February (Lehman 2013). Northern rough-winged swallows are protected under the federal Migratory Bird Treaty Act of 1918. Thus, it is illegal to remove completed nests during the breeding season without a permit from the U.S. Fish and Wildlife Service.

4.2.8.4 Bank Swallow (*Riparia riparia*)

Bank swallows were rare but regular migrants through Santa Barbara County into the early 1990s, but have declined since then, and today are rare. This species is a state-listed threatened species. Spring transients are typically observed between mid-April and mid-May. Fall transients are typically observed between late August and early October. Bank swallows nest in tunnels in vertical sand banks. They no longer breed in southern California (Lehman 2013). Bank swallows are protected under the federal Migratory Bird Treaty Act of 1918.

Thus, it is illegal to remove completed nests during the breeding season without a permit from the U.S. Fish and Wildlife Service.

4.2.9 Bats

On October 10, 2014 93 individuals were observed roosting in the cracks under the bridge. Ninety western free-tailed bats (*Tadarida brasiliensis*) and three Yuma myotis (*Myotis yumaensis*) were observed day roosting beneath the existing Hollister Avenue Bridge. Detailed results are presented in Appendix D. Additional surveys are planned to occur in 2015 to determine if additional bat species are present on the bridge.

There is also a large colony of western free-tailed bats under the Hollister Avenue bridge over Maria Ygnacio Creek near the project site, and there are colonies of pallid bat and Mexican free-tailed bat roosting on the Hollister Avenue/Cathedral Oaks ("Winchester Canyon") Bridge over US 101, approximately 4 miles west of the Hollister Avenue Bridge Replacement Project (California Coastal Commission 2009).

The following brief descriptions discuss the status and life history of the two species known to be using the bridge, as well as pallid bat because it is a Species of Special Concern and because it is known to be in the area and might be found to be using the bridge in future surveys planned to be conducted in 2015.

4.2.9.1 Western Free-tailed Bat (*Tadarida brasiliensis*)

The western free-tailed bat (also called Brazilian free-tailed bat) is common in California and is abundant in some localities. It is not ranked by the Western Bat Working Group. Many habitats are used, but open habitats such as woodlands, shrublands, and grasslands are preferred. This species was observed occupying the Hollister Avenue/Cathedral Oaks Road bridge in west Goleta, approximately 4 miles west of the project site (California Coastal Commission 2009). This species requires caves, mine tunnels, crevices, or buildings for roosting and hibernation, apparently mostly using buildings along the coast. This species may use a separate night roost, particularly if foraging far from the day roost. Maternity colonies of females and young are found in caves, crevices, and buildings. Western free-tailed bat emerges shortly after dusk, and returns to the day roost before sunrise. Individuals travel sometimes 40 miles or more, from roosting sites to foraging areas. Group sizes range from small groups of males to maternity colonies or hibernating groups of thousands. Mating occurs between February and March, and births occur in June and July, peaking in early July (Harris 1988–1990a).

4.2.9.2 Yuma Myotis (*Myotis yumaensis*)

Yuma myotis is a common bat species in California. The Western Bat Working Group ranks this species as "low-medium priority" (CDFW 2014). Optimal foraging habitat includes open

woodlands with water over which to prey on insects found by echolocation. Yuma myotis roosts under bridges, in crevices in buildings and in caves. Separate night roosts are also used. This species emerges from the roost between sunset and 2.5 hours after sunset. Maternity colonies are established under bridges and other structures. Most births occur between late May and mid-June (Harris 1988–1990b).

4.2.9.3 Pallid Bat (*Antrozous pallidus*)

Pallid bat is a California Species of Special Concern and the Western Bat Working Group ranks this species as "high priority" (CDFW 2014). In California, pallid bat occurs throughout the state in a variety of habitats. The subspecies *A. p. pacificus* occurs along the coast. This species was observed occupying the Hollister Avenue/Cathedral Oaks Road bridge in west Goleta, approximately 4 miles west of the project site (California Coastal Commission 2009). Pallid bats are primarily a crevice roosting species, and select daytime roosting sites where they can retreat from view. Mating occurs in fall or winter, and births occur in early summer. Common roost sites are rock crevices, old buildings, bridges, caves, mines, and hollow trees. Pallid bats are very sensitive to disturbance at the roost. When disturbed, they generally retreat into crevices, and with repeated disturbance, may abandon the roost. Their response time is slow, however, making them vulnerable to shooting and other forms of vandalism, and their loyalty to a chosen roost (particularly buildings, mines, bridges) is generally high. In central coastal California, pallid bat colonies are vulnerable to bridge modifications and/or replacements (Pierson and Rainey in Bolster 1998).

4.2.10 Arroyo Willow Thickets (*Salix lasiolepis* Shrubland Alliance)

Arroyo willow thickets are identified by the CDFW (2010) as a sensitive terrestrial natural community, and are a common constituent of riparian corridors along the Southern California coast. This vegetation community is characterized by dominance or co-dominance of arroyo willow (*Salix lasiolepis*) in the shrub or tree canopy, often in association with other riparian trees such as cottonwoods (*Populus* spp.) and western sycamores (*Platanus racemosa*) or riparian shrubs such as mule fat (*Baccharis salicifolia*) and other willows (*Salix* spp.) (Sawyer *et al.* 2009). Because the arroyo willow is identified by the USACE as a wetland indicator species (Lichvar 2013), arroyo willow thickets normally meet the one-parameter definition of wetlands adopted by the City of Goleta (County of Santa Barbara 2002). Within the Area of Potential Impact, arroyo willow thickets occur along the eastern and western banks of San Jose Creek upstream of the existing Hollister Avenue bridge (Figure 5). In total, approximately 0.22 acre of this vegetation type is present within the Area of Potential Impact. The plant species present in this area are described in Section 4.3 below.

4.3 VEGETATION

The existing bridge is supported by a trapezoidal structure that has concrete sides and a concrete floor. There is no vegetation on the bridge or under the bridge due the concrete

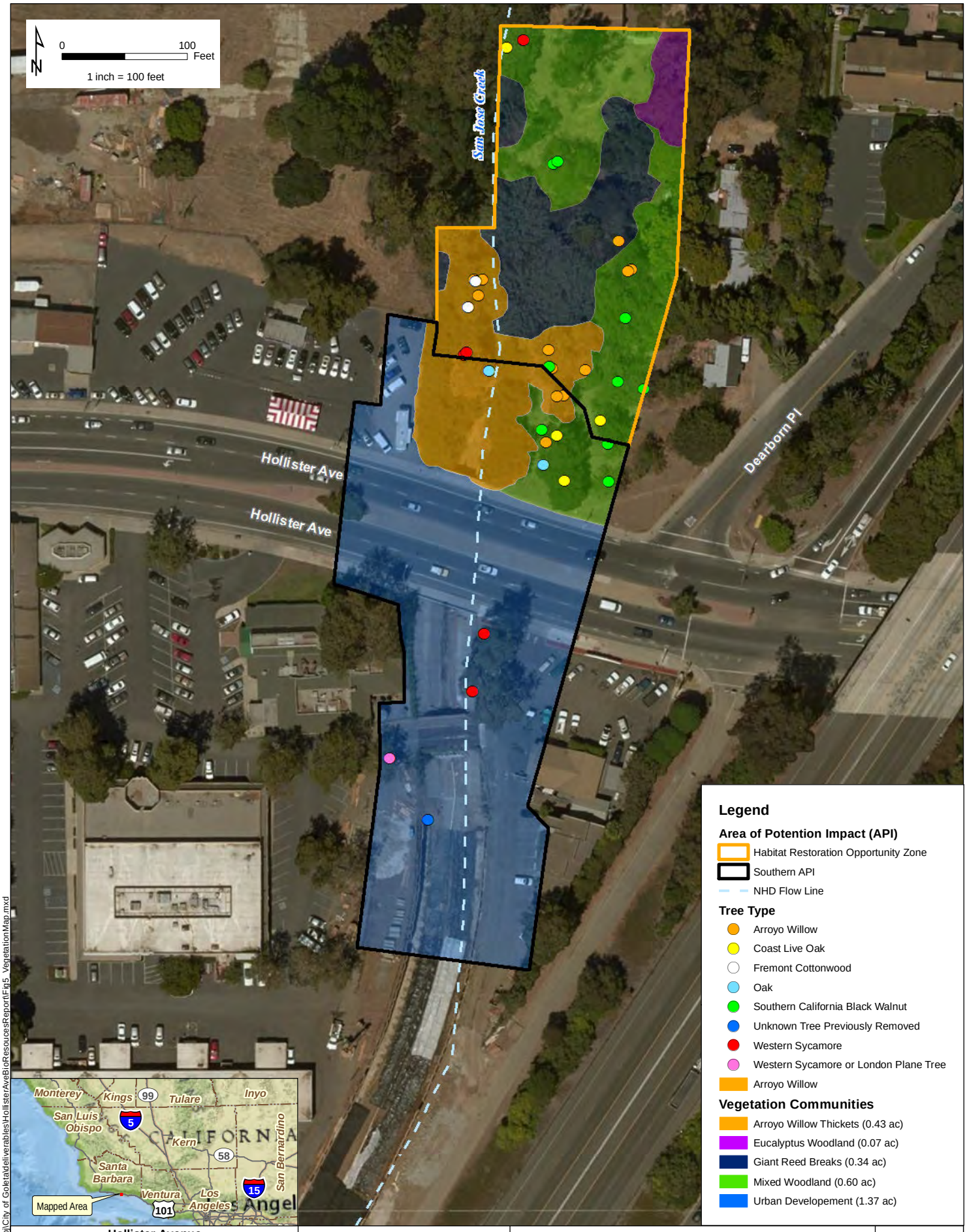

Hollister Avenue
Bridge Replacement Project
City of Goleta, CA
05-SB-0-GLTA BRLS-5481 (013)

URS Corporation

Source: [1] Bing Maps Aerial Hybrid accessed November 2014, [2] NHD 2014.

Figure 5. VEGETATION

2014

V:\Projects\GIS_Proj\City of Goleta\deliverables\HollisterAveBioResoucesReport\Fig5_VegetationMap.mxd

substrate. Three vegetation types occur within the Area of Potential Impact affected by construction including: arroyo willow thickets, mixed woodland, and disturbed/urban development. Four vegetation types occur within the Habitat Restoration Opportunity Zone, including: arroyo willow thicket, mixed woodland, eucalyptus stands, and giant reed breaks. These vegetation types are presented on Figure 5.

Upstream (north) of the existing bridge structure, the vegetation along the creek consists of arroyo willow thicket, called "*Salix lasiolepis* Shrubland Alliance" (Sawyer *et al.* 2009). This vegetation occurs on the steep creek banks and to some extent on the east and west terraces as well (Figure 5). The dominant species is arroyo willow (*Salix lasiolepis*). Associated species include western sycamore (*Platanus racemosa*), California blackberry (*Rubus ursinus*), poison oak (*Toxicodendron diversilobum*), mugwort (*Artemisia douglasiana*) and others. This vegetation occurs on the steep creek banks and to some extent on the east and west uplands as well. The boundary of this community on the west side of the creek is limited by a chain link fence. Land west of the fence has been graded and is used as a commercial used car lot. A complete list of plant species observed within the project site is provided in Appendix F-1.

The uplands on the east side of the creek and north of the bridge is disturbed and is vegetated by a mix of native and non-native trees dominated by non-native understory. These areas are characterized as mixed woodland; associated species include coast live oak (*Quercus agrifolia*) and several Southern California black walnut trees (*Juglans californica*) (these appear to have been planted as part of a previously existing orchard, that were cut and have resprouted from their bases). One oak tree that may be interior live oak (*Quercus wislizeni*) or a hybrid that is not native to the Goleta Valley occurs on the eastern terrace and a second one occurs on the east bank of the creek. The understory is disturbed and consists primarily of annual non-native grasses in the southern portion of the mixed woodland and dominated by cape ivy (*Delairea odorata*) in the northern portion of the mixed woodland.

On-site, eucalyptus groves (*Eucalyptus* [*globulus, camaldulensis*] semi-natural woodland stands; Sawyer *et al*. 2009) are dominated by mature eucalyptus (*Eucalyptus globulus*) with a mostly barren understory. Eucalyptus groves are located in the northeast corner of the Habitat Restoration Opportunity Zone.

On-site, giant reed breaks (*Arundo donax* semi-natural herbaceous stands; Sawer *et al.* 2009) are dominated by dense populations of giant reed (*Arundo donax*) with some cape ivy present and two emergent trees, one non-native ash (*Fraxanus* sp.) and one arroyo willow. Giant reed breaks are located throughout the central portion of the Habitat Restoration Opportunity Zone.

The downstream side (south) of Hollister Avenue is almost entirely developed with paving, a bridge, and landscaping. Two western sycamores and a third tree that is probably a London Plane tree occur south of Hollister Avenue within the project site.

Acreages of specific vegetation communities present within the southern API and the Habitat Restoration Opportunity Zone are presented in Table 1 and depicted on Figure 5.

TABLE 1
VEGETATION COMMUNITIES WITHIN THE AREA OF POTENTIAL IMPACT AND HABITAT RESTORATION OPPORTUNITY ZONE

Vegetation Community Type	Acreage
Southern Area of Potential Impact (Affected by Construction)	
Arroyo willow thickets	0.22
Mixed woodland	0.13
Urban development	1.42
Subtotal	1.77
Habitat Restoration Opportunity Zone	
Arroyo willow thickets	0.17
Eucalyptus woodland	0.06
Giant reed breaks	0.34
Mixed woodland	0.52
Subtotal	1.09
Total	2.86

4.3.1 Waters of the U.S. and CDFW-jurisdictional Streambeds

In summary, delineation studies concluded that San Jose Creek does not contain wetland waters but does contain non-wetland waters of the U.S. subject to the USACE permitting authority under Section 404 of the CWA and that the channel of San Jose Creek and its associated riparian vegetation constitute a streambed subject to the CDFW's authority under Sections 1600 *et seq.* of the California Fish and Game Code (Figure 6). A total of 0.106 acre of non-wetland Waters of the U.S. and 0.55 acre of CDFW-jurisdictional streambed occur within the Area of Potential Impact. The CDFW-jurisdictional area would also be considered a wetland pursuant to the City's *Environmental Thresholds and Guidelines Manual* (County of Santa Barbara 2002). They are also part of the San Jose Creek streambed, and activities affecting this resource may be regulated by the CDFW pursuant to Sections 1600 *et seq.* of the California Fish and Game Code.

V:\Projects\GIS_Proj\City of Goleta\deliverables\HollisterAveBioResoucesReport\Fig6_JurisdictionalAreas.mxd

Hollister Avenue **Bridge Replacement Project** **City of Goleta, CA** **05-SB-0-GLTA BRLS-5481 (013)**	**Source:** [1] Bing Maps Aerial Hybrid accessed November 2014, [2] NHD 2014.	**Figure 6.** Wetlands and Waters Jurisdictional Determination	2014
URS Corporation			

4.3.2 Trees

All native, potential native hybrid trees, and in one instance, a tree that is difficult to identify due to very similar appearance of native and non-native individuals (i.e., London plane tree) were documented during tree inventories conducted on October 8, 2013 by URS biologists Julie Love and Elihu Gevertz and on November 13, 2014 by URS biologists Julie Love and Billy Fletcher. There are approximately 45 trees within the portion of the Area of Potential Impact affected by construction of the bridge and approximately 71 trees within the Habitat Restoration Opportunity Zone (Table 2 and Figure 3). Appendix C provides the DBH and health of each of the individual trees.

TABLE 2
TREES WITHIN THE AREA OF POTENTIAL IMPACT AND HABITAT RESTORATION OPPORTUNITY ZONE

Scientific Name	Common Name	Number of Trees
Southern Area of Potential Impact (Affected by Construction)		
Salix lasiolepis	Arroyo Willow	35 +/-
Quercus agrifolia	Coast Live Oak	2
Platanus racemosa	Western Sycamore	2
Juglans californica	Southern California Black Walnut	3
Quercus sp.	Oak (non-native)	2
Platanus x *hispanica* (?)	London Plane Tree (?)	1
Subtotal		45 +/-
Habitat Restoration Opportunity Zone		
Salix lasiolepis	Arroyo Willow	58 +/-
Quercus agrifolia	Coast Live Oak	2
Platanus racemosa	Western Sycamore	3
Juglans californica	Southern California Black Walnut	6
Populus fremontii	Fremont Cottonwood	2
Subtotal		71 +/-
Total		116 +/-

SECTION 5.0
PROJECT IMPACTS

5.1 TEMPORARY VS. PERMANENT IMPACTS

Based on the preliminary design, the project would temporarily impact approximately 0.3 acre of permeable surfaces; and would permanently remove approximately 0.4 acre within the Area of Potential Impact. All of the temporary impact area is north of Hollister Avenue. A majority of the permanent impact area is also north of Hollister Avenue, but there are two small strips of permeable (and vegetated) surfaces south of Hollister Avenue at the top of the existing channel (on both sides of San Jose Creek) that are included in the calculation of permanent impact area (J. Elmensdorp, DHA, *pers. comm*. 2013).

5.2 REMOVAL OF RIPARIAN VEGETATION

Construction of the project would remove approximately 0.22 acre of arroyo willow thicket (*Salix lasiolepis* Shrubland Alliance), a sensitive natural community (CDFW 2010). This area also meets the City's definition of wetland. Arroyo willow thickets are a riparian community that provide several important ecosystem functions including provision of feeding, roosting and nesting habitat for many species of birds, possibly including California Species of Special Concern such as warbling vireo, Wilson's warbler, and yellow warbler, provision of sheltering and feeding habitat for amphibians such as treefrogs, creek bank stabilization, and maintaining cool air and water temperatures in the shade of the canopy which is important for steelhead. The removal of 0.22 acre of arroyo willow thicket is therefore a significant but mitigable impact (Mitigation BIO-2 and BIO-3).

5.3 REMOVAL OF MATURE NATIVE TREES

Two mature specimen coast live oak trees, two western sycamores, and approximately 35 arroyo willows would be removed. These mature trees provide important functions, providing habitat for insects which are a significant food source for many bird species. The trees also provide habitat for birds such as Nuttall's woodpecker, oak titmouse, bushtit, and many others. Avoidance of the trees is not feasible according to communications with the project engineer (Craig Drake, DHA, *pers. comm*. 2013). However, there is a 50-foot space between the edge of pavement and the outer boundary of the Area of Potential Impact. While willows grow to maturity in a few years, and western sycamores take ten or more years to reach mature size, live oaks typically take many decades to grow to maturity. Thus, with oak trees in particular, and to lesser degree with sycamores, the impact of their removal is long-term. The impact is significant but mitigable (Mitigation BIO-1).

5.4 REMOVAL OF MATURE NON-NATIVE TREES

Three specimen southern California black walnut trees, two non-native oak trees, and one London plane tree would be removed. Because the walnut trees are native but were probably planted as part of an orchard a long time ago, and because the other three trees are not native, they have less significance than the native trees. While they do provide habitat functions such as perching opportunities for birds, and shade for other animals, their overall value is low. This impact would not be significant.

5.5 IMPACTS TO WATERS OF THE U.S. AND CDFW-JURISDICTIONAL STREAMBEDS

Impacts to jurisdictional features will be comprised of both permanent and temporary impacts. Some permanent impacts will include areas that currently consist of concrete channel that will be replaced with concrete and other areas will involve permanent impacts to existing natural areas. A total of 0.106 acre (424 linear feet) of non-wetland Waters of the U.S. occur withn the Area of Potential Impact. Of this total acreage, 0.075 acre (195 linear feet) will be permanently impacted; 0.06 acre comprises existing concrete channel and 0.015 acre comprises natural channel. Of the total acreage, 0.031 acre (229 linear feet) will be temporarily impacted, 0.001 acre due to construction-related activities, and 0.03 acre within the area impacted by potential, beneficial, restoration activities (Figure 6). Additionally, a total of 0.55 acre of CDFW-jurisdictional streambed occurs within the Area of Potential Impact. Of this total acreage, 0.26 acre will be permanently impacted, 0.11 acre comprises existing concrete channel, and 0.15 acre comprises natural channel. Of the total acreage, 0.29 acre will be temporarily impacted: 0.03 acre due to construction-related activities, and 0.26 acre by potential, beneficial, restoration activities, as shown on Figure 6. The CDFW-jurisdictional area would also be considered a wetland pursuant to the City's *Environmental Thresholds and Guidelines Manual* (County of Santa Barbara 2002). This is a potentially significant but mitigable impact (Mitigation Measures BIO-2 and BIO-3).

5.6 IMPACTS TO COMMON ANIMALS

Animal species that move relatively slowly such as treefrogs and small burrowing mammals are likely to be killed during vegetation removal. Impacts to these species would be less than significant because they are generally abundant and well-distributed regionally and because the number of animals that would be killed is likely to be low because the grading footprint is small.

5.7 IMPACTS TO CALIFORNIA RED-LEGGED FROG

Given that past surveys have been conducted at the site and have not found California red-legged frogs, that the habitat suitability is marginal and that the site is surrounded by urban development, it is unlikely that California red-legged frog will be in the project area during

the period of vegetation removal which is planned to occur in the dry season. The impact is not significant, and would be further reduced by the presence of a biological monitor during vegetation removal (Mitigation BIO-4 and BIO-5).

5.8 IMPACTS TO STEELHEAD

Work in the stream will be conducted during the dry season, between May 15 and October 15, when there is no water in the creek in most years. Therefore, even though the downstream portion of the San Jose Creek Capacity Improvement and Fish Passage Project will be completed before the bridge replacement project is constructed, steelhead are not expected to be impacted. Construction will facilitate steelhead migration which is expected to be beneficial to the species as it is expected to facilitate movement toward upstream areas of the creek that are suitable for spawning. Short-term impacts such as willow tree removal will remove shade and could therefore increase the temperature of water in the stream within the project reach. Because it is a short stretch of stream (approximately 125 feet) the impact is not significant. The project was reviewed by the USACE, and the NMFS as part of their reviews of the San Jose Creek Capacity Improvement Project (now referred to as the San Jose Creek Capacity Improvement and Fish Passage Project). The USACE determined that the project may affect but would not likely adversely affect Southern steelhead and its designated critical habitat in San Jose Creek (Appendix A). NMFS concluded that the project is expected to be beneficial to steelhead as its implementation is expected to significantly improve fish passage conditions at this location (Appendix A).

5.9 IMPACTS TO BREEDING BIRDS

If vegetation removal occurs between May 15 and August 15, active bird nests might be destroyed and eggs or young birds unable to fly might be destroyed. This would be a violation of the Migratory Bird Treaty Act and impermissible under federal law. If warbling vireo, Wilson’s warbler, yellow warbler, or any other California Species of Special Concern are nesting in the Area of Potential Impact during the period of vegetation removal, it would be a significant but mitigable impact (Mitigation BIO-4 and BIO-6).

5.10 IMPACTS TO WILDLIFE MOVEMENT

Common animals such as raccoon use the creek corridor to move through the area. Construction in the creek will be temporary, and common animals such as raccoon often move at night and will likely be able to easily move around obstacles in the creek. Thus the impact is not considered significant (Mitigation BIO-3 and BIO-4).

5.11 IMPACTS TO AQUATIC HABITAT IN SAN JOSE CREEK AND GOLETA SLOUGH

Construction in the stream could result in deposition of sediment and/or petrochemical pollutants in the stream that could be transported downstream in San Jose Creek and in the mouth of Goleta Slough. This could result in polluting downstream habitat in San Jose Creek and in the mouth of the Goleta Slough which provides habitat for the federally Endangered tidewater goby (*Eucyclogobius newberryi*) and other species. This is a potentially significant but mitigable impact (Mitigation BIO-3 and BIO-7).

SECTION 6.0
MITIGATION MEASURES

BIO-1. Coast live oaks and/or western sycamores should be avoided to the extent practicable. All coast live oaks and western sycamores that cannot be avoided shall be replaced at a ratio of 10:1 (trees planted to trees removed). The trees shall be grown from local seed stock in 5-gallon containers and planted within the project boundary at approximately 20 foot spacing or greater. If there is inadequate area available, the trees shall be planted elsewhere along San Jose Creek upstream of the project site or elsewhere within the watershed of the Goleta Slough. Seed collection and cultivation shall be initiated before construction starts, or as soon as practicable. These trees shall be irrigated and weeded for at least three years (up to five years if necessary) and monitored for a total of five years. An annual monitoring report shall be submitted to the City for review and approval.

Monitoring. A biologist shall monitor seed collection, planting, irrigation and monitoring, and submit an annual progress report to the City.

BIO-2. Prior to construction, a biologist shall prepare a riparian and oak woodland restoration plan for the site selected for mitigation. The restoration plan shall include a list of species to be planted, their size and numbers of individuals to be planted (including any trees required in Mitigation BIO-1). The restoration plan shall include performance standards including 75 percent survival at the end of two years and 65 percent at the end of five years. The plan shall be submitted to the City for review and approval.

Monitoring. The City will review and approve the restoration plan.

BIO-3. The removal of 0.22 acre of arroyo willow thicket (*Salix lasiolepis* Shrubland Alliance) shall be mitigated at a 2:1 ratio by the restoration of 0.56 acre. This restoration should occur within the project site, if feasible. If this is not feasible, additional areas of restoration should occur in or along San Jose Creek or elsewhere within the Goleta Slough watershed. Removal of giant reed (*Arundo donax*) currently growing adjacent to the upstream side of the Area of Potential Impact and restoration with native riparian habitat should be considered as potential mitigation. All native plants grown for the project should be grown from seed or cuttings that are obtained within the Goleta Slough watershed.

Monitoring. A biologist shall monitor the collection of seed and/or cuttings, and shall monitor the planting and weeding, and direct the timing of irrigation for five years. An annual report shall be prepared by the biologist and submitted to the City.

BIO-4. Removal of vegetation and initial dewatering of the creek (if necessary) shall occur in the dry season, typically between May 15 and October 15.

Monitoring. A biologist shall monitor removal of vegetation and dewatering of the creek and submit a report to the City at the end of the vegetation removal.

BIO-5. If vegetation removal or other elements of Project construction will occur while there is water in the creek, pre-construction surveys for California red-legged frog and other sensitive species shall be conducted by an approved biologist. If any red-legged frogs or other federally listed species are found, the Project shall be delayed until the U.S. Fish and Wildlife Service (USFWS) is consulted and a take avoidance strategy is developed. If no red-legged frogs are found, project construction may proceed. A biologist familiar with the species shall be present monitoring the site during the vegetation removal phase of the project.

Monitoring. A qualified biological monitor shall be present during vegetation removal and will prepare daily monitoring logs of all observations. These logs shall be summarized into a weekly memo style report that is submitted to the City.

BIO-6. If vegetation removal occurs during the bird breeding season (February 1 through August 31), pre-construction nesting bird surveys shall be conducted by a qualified biologist once per week for three weeks prior to commencement of vegetation removal. The biologist will determine the presence or absence of nesting birds in the area of direct disturbance, and will determine appropriate buffer areas from any nests. Any active nests found shall not be disturbed. A minimum of a 300-foot buffer shall be applied to all active nests until the young of the year have left the nest. The buffer may be modified in consultation with the USFWS and the City, taking into account the species and the location of the nest relative to the disturbance area. Vegetation removal and construction within the buffers shall be postponed until the biologist has determined that the young of the year have left the nest(s).

Monitoring. If vegetation is removed between February 1 and August 31, a biologist shall be on-site throughout the entire period of vegetation removal. The monitor shall have the authority to stop work if necessary to avoid impacts to nesting birds. Weekly memo-style reports shall be submitted by the biologist to the City of Goleta, CDFW and USFWS recording the activity regarding construction and breeding birds.

BIO-7. Best Management Practices, including erosion control measures such as straw waddles placed in the stream bank downstream of the construction zone, shall be implementeed prior to vegetation removal. If sediment builds up behind the waddles, it shall be removed once per week or as needed to prevent migration of sediment downstream of the project site.

Monitoring. A biologist shall visit the construction site once per week to verify compliance with this mitigation measure and work with the contractor to solve any problems in the field. A brief memo report shall be submitted to the City documenting observations and resolutions if any.

6.1 CUMULATIVE IMPACTS

Although the project would cause impacts to riparian habitat and the plants and animals that live in the habitat, the project's contribution (less than 0.5 acre) to the region's cumulative impacts to these resources is not considerable.

SECTION 7.0
PERMITS REQUIRED

The proposed project would require state and federal permits for proposed activities affecting streams and wetlands. These authorizations are described herein.

7.1 THREATENED AND ENDANGERED SPECIES

No federally or state listed threatened, endangered, or candidate species are likely to occur within the Area of Potential Impact during the construction period.

The project was reviewed by the USACE, and the NMFS as part of their reviews of the San Jose Creek Capacity Improvement Project (now referred to as the San Jose Creek Capacity Improvement and Fish Passage Project). The USACE determined that the project may affect but would not likely adversely affect Southern steelhead and its designated critical habitat in San Jose Creek (Appendix A). NMFS concluded that the project is expected to be beneficial to steelhead as its implementation is expected to significantly improve fish passage conditions at this location (Appendix A).

California red-legged frog and least Bell's vireo (*Vireo belli pusillus*) are not believed to occur in the Area of Potential Impact, and a letter will be provided to the USFWS indicating that the project would not affect these species.

7.2 WATERS OF THE U.S. AND CDFW-JURISDICTIONAL STREAMBEDS, WETLANDS, AND OTHER WATERS

No wetland waters of the U.S. occur within the Area of Potential Impact. The channel of San Jose Creek, within the Area of Potential Impact contains 0.106 acre of non-wetland Waters of the U.S., as well as 0.55 acre of CDFW-jurisdictional streambed (Figure 6). The CDFW-jurisdictional area would also be considered a wetland pursuant to the City's *Environmental Thresholds and Guidelines Manual* (County of Santa Barbara 2002). Results of this delineation have not yet been provided to the USACE, and no formal coordination with this agency has occurred to date. Because the project would occur within the floodplain of San Jose Creek, it is expected that Federal Highway Administration (FHWA) will need to make a Finding of No Practicable Alternative for the project pursuant to federal Executive Order 11988.

It is anticipated that the project would require a CWA Section 404 permit and a Streambed Alteration Agreement from the CDFW to authorize alteration of the stream banks and channel during construction. Results of the URS survey have not yet been provided to the CDFW, and no formal coordination with this agency has occurred to date.

Section 401 of the Clean Water Act (CWA) mandates that any applicant for a federal permit to conduct an activity that may result in a discharge into navigable waters provide a state-issued certification that the proposed activity would comply with state water quality objectives. As such, the applicant would be required to notify the Central Coast Regional Water Quality Control Board (RWQCB) and obtain a Section 401 Water Quality Certification prior to obtaining a Section 404 permit from the USACE. To date, no coordination with the RWQCB has been initiated and permit applications have not been submitted.

The City will be required to submit a Notice of Intent to the RWQCB to comply with the National Pollutant Discharge Elimination System (NPDES) MS4 permit. A discretionary land use permit from the City of Goleta would also be required.

SECTION 8.0
REFERENCES

California Department of Fish and Wildlife (CDFW). 2013. State and Federally Listed Endangered, Threatened, and Rare Plants of California. Biogeographic Data Branch. California Natural Diversity Database. July.

2011. Special Animals List. Available online at: http://www.dfg.ca.gov/biogeodata/cnddb/pdfs/SPAnimals.pdf. Accessed through October 29, 2013.

2010. List of California Terrestrial Natural Communities. Available online at http://www.dfg.ca.gov/biogeodata/vegcamp/pdfs/natcomlist.pdf. Prepared September 2010. Accessed through October 29, 2013.

California Department of Transportation (Caltrans). 2013. Structure and Maintenance Investigations: Local Agency Bridge List. September, 2013. Available online at: http://www.dot.ca.gov/hq/structur/strmaint/local/localbrlist.pdf. Accessed through October 29, 2013.

California Native Plant Society. 2013. The Online CNPS Inventory of Rare and Endangered Plants (8th Edition). Accessed October 8, 2013.

City of Goleta. 2008. Initial Study/Final Mitigated Negative Declaration/Environmental Assessment Addendum 07-MND-01. Prepared by Science Applications International Corporation. February.

Consortium of California Herbaria (ucjeps.berkeley.edu/consortium/) accessed October 24, 2013.

County of Santa Barbara. 2002. Environmental Thresholds and Guidelines Manual. Planning and Development Department. Published May 1992. Revised January 1995, October 2001, and October 2002. Available online at: http://www.cityofgoleta.org/index.aspx?page=459. Accessed through October 29, 2013.

Entrix, Inc. 2010. San Jose Creek Capacity Improvement Project Biological Resources Survey Report. October 19.

Environmental Laboratory. 1987. *Corps of Engineers Wetland Delineation Manual*. Technical Report Y-87-1. U.S. Army Corps of Engineers, Waterways Experiment Station. Vicksburg, MS.

Holland R. 1986. Preliminary Descriptions of the Terrestrial Natural Communities of California. Unpublished Report. California Department of Fish and Game, Natural Heritage Division, Sacramento, California.

Lehman, P. 2012. The Birds of Santa Barbara County, California. Revised Draft.

Lichvar, R.W. 2013. The National Wetland Plant List: 2013 wetland ratings. Phytoneuron 2013-49: 1–241. Published 17 July. 2013. ISSN 2153 733X.

Sawyer, J., T. Keeler-Wolf and J. Evens. 2009. A Manual of California Vegetation. Second Edition. California Native Plant Society in Collaboration with California Department of Fish and Game. Sacramento, California.

Science Applications International Corporation 2007. California Red-Legged Frog and Other Wildlife Survey Report. San Jose Creek Capacity Improvement Project. City of Goleta, Santa Barbara County, California. January.

Stebbins, R. 2003. Western Reptiles and Amphibians. Third Edition. Houghton Mifflin Company.

Stoecker, M. 2002. Steelhead Assessment and Recovery Opportunities in Southern Santa Barbara County, California.

URS 2012. Letter to Rosemarie Gaglione, City of Goleta Community Services Department re: Protocol Least Bell's Vireo Survey Report for City of Goleta's Ekwill/Fowler Project. August 15.

U.S. Army Corps of Engineers (USACE). 2008. Regional Supplement to the Corps of Engineers Wetland Delineation Manual: Arid West Region (Version 2.0). ed. J.S. Wakeley, R.W. Lichvar, and C.V. Noble. ERDC/EL TR-08-28. Vicksburg, Mississippi: U.S. Army Engineer Research and Development Center.

APPENDIX A
FEDERAL AGENCY DETERMINATIONS REGARDING SOUTHERN STEELHEAD

CITY OF GOLETA
CALIFORNIA
JUL 11 2011
RECEIVED

UNITED STATES DEPARTMENT OF COMMERCE
National Oceanic and Atmospheric Administration
NATIONAL MARINE FISHERIES SERVICE
Southwest Region
501 West Ocean Boulevard, Suite 4200
Long Beach, California 90802-4213

SWR/2010/06191:MRM

JUL -7 2011

Aaron O. Allen, Ph.D.
U.S. Army Corps of Engineers
Los Angeles District
Ventura Field Office
2151 Alessandro Dr., Suite 110
Ventura, California 93001

Dear Dr. Allen:

NOAA's National Marine Fisheries Service (NMFS) has reviewed the U.S. Army Corps of Engineers' (Corps) July 7, 2011 letter requesting informal consultation for the City of Goleta's (City) project to increase flood capacity and improve passage for the endangered Southern California Distinct Population Segment of steelhead (*Oncorhynchus mykiss*) through a 4,236-foot trapezoidal concrete channel on lower San Jose Creek in Goleta, California. Your letter references the recent project related information provided by the City during June 2011 which includes the final designs for the project, final HEC-RAS and physical modeling results, final hydraulic calculations, and the proposed monitoring, maintenance, and evaluation plan. This supplemental information has allowed NMFS to develop an understanding of the possible effects of the project on the endangered steelhead and designated critical habitat for this species which are present in San Jose Creek. As such, NMFS can now render a determination with respect to the consultation being performed under Section 7 of the U.S. Endangered Species Act.

Activities for this project mainly involve the following:

- Demolition of the existing concrete channel bottom and banks.
- Excavation of a rectangular shaped channel including a deeper low flow channel in the bottom for fish-passage.
- Installation of pre-cast vertical concrete walls along the sides of the channel.
- Installation of articulated concrete revetment over a layer of rock and filter fabric on the channel bottom.
- Installation of weirs on top of the articulated revetment and within the low flow channel to increase water depth for fish-passage.
- Installation of wedge blocks at calculated locations along the edge of the channel to provide velocity refuges for migrating steelhead.
- Implementation of a post-construction monitoring, maintenance, and evaluation plan to ensure the project is passing steelhead according to expectations.

Originally, in the Corps' December 9, 2010, letter, the Corps requested formal consultation with NMFS for the proposed action due to anticipated adverse effects to steelhead. However, as outlined in the Corps' July 7, 2011 letter, based on a subsequent review of the recent project information (described above) the Corps has determined that the project is not likely to adversely affect steelhead or critical habitat and has requested NMFS' concurrence with this determination. NMFS concurs with this determination based on the following reasons. Work will be performed on a concrete channel that currently provides no habitat for steelhead and is expected to be dry at the time of construction. Therefore, no steelhead are expected to be present at the time of construction and no moving of steelhead will occur as a result of this project. In fact, this project is expected to be beneficial to steelhead as its implementation is expected to significantly improve the existing passage conditions for steelhead at this location. There are some uncertainties regarding the performance of this fish-passage design and the degree to which potential sedimentation could be an issue. However, results from both the HEC-RAS and physical modeling efforts as well as the hydraulic calculations indicate that it is likely that this design will meet and possibly exceed NMFS' fish-passage guidelines. Further, the City has proposed a detailed monitoring, maintenance, and evaluation plan to ensure that the project is working as intended for both flood conveyance and fish-passage.

This concludes informal section 7 consultation for this proposed action. Consultation must be reinitiated where discretionary Federal agency involvement or control over the action has been retained (or is authorized by law) and: (1) if new information becomes available revealing effects of the action on listed species in a manner or to an extent not previously considered, (2) if the agency action is subsequently modified in a manner that causes an effect to listed species that was not considered, or (3) if a new species or critical habitat is designated that may be affected by this action. Please call Matt McGoogan at (562) 980-4026 if you have any questions concerning this letter or if you require additional information.

Sincerely,

for

Rodney R. McInnis
Regional Administrator

cc: Theresa Stevens, Corps, Ventura, California
David Crowder, NMFS, Santa Maria, California
Mary Larson, CDFG, Los Alamitos, California
Roger Root, USFWS, Ventura, California
Rosemarie Gaglione, City of Goleta, California
Jon Frye, City of Santa Barbara, California
Copy to Administrative File: 151422SWR2010PR00528

DEPARTMENT OF THE ARMY
Los Angeles District, Corps of Engineers
Ventura Field Office
2151 Alessandro Drive, Suite 110
Ventura, California 93001

CITY OF GOLETA
CALIFORNIA
JUL 11 2011
RECEIVED

July 7, 2011

REPLY TO
ATTENTION OF:
Regulatory Division

Mr. Rodney McInnis
National Oceanic and Atmospheric Administration
National Marine Fisheries Service
Southwest Region
Attn: Mr. Matt McGoogan
501 West Ocean Blvd., Suite 4200
Long Beach, CA 90802-4213

SUBJECT: Section 7 Consultation for the San Jose Creek Capacity Improvement Project (NMFS File No. SWR/2008/07997:MRM)

Dear Mr. McInnis:

The City of Goleta has recently redesigned the proposed San Jose Creek channel in accordance with your agency's *Guidelines for Salmonid Passage at Stream Crossings* (NMFS 2001) and has been working closely with the Corps project manager and your staff (David Crowder and Matt McGoogan) as well as salmonids specialists with the California Department of Fish and Game to insure the channel design qualifies for a variance from these Guidelines and is sufficient to complete the Section 7 consultation process. In light of the revised channel design, and HEC-RAS model results which show the proposed design are in substantial conformance with your Guidelines and which your staff have reviewed extensively, the Corps has determined the proposed San Jose Creek Capacity Improvement Project may affect but would not likely adversely affect southern steelhead (*Oncorhynchus mykiss*) and its designated critical habitat in San Jose Creek (Corps File No. SPL-2010-01052-TS). The proposed project is located downstream of Hollister Avenue in San Jose Creek within the City of Goleta, Santa Barbara County, California.

As you know, the City of Goleta experiences flooding due to water overtopping the bank of San Jose Creek and has determined the existing concrete-lined trapezoidal San Jose Creek

flood control channel is undersized. The purpose of the proposed project is two-fold; it would increase flood capacity of this channel over its approximately 4,236-foot length to contain a 100-year flow and improve fish passage. The proposed project would be accomplished by removing existing concrete from the entire channel bed and bank, excavation the existing channel bed and bank to accommodate a rectangular lined channel; waters of the U.S. would be increased by approximately 1.15 acres. The proposed design would increase flow conveyance capacity. The newly proposed channel would be constructed of pre-cast vertical concrete wall segments secured to a foundation system of vertical piles; articulated pavers/revetment would be installed over a layer of rock and filter fabric on the channel bottom. The channel bed would include a concrete-lined low flow channel interspersed with notched weirs to create resting areas which would facilitate passage of southern steelhead (*Oncorhynchus mykiss*) through Goleta Slough to/from the upper watershed; the project is expected to benefit the species by facilitating passage through the lined channel.

Therefore, pursuant to Section 7 of the Endangered Species Act of 1973, as amended, the Los Angeles District hereby requests initiation of informal consultation for the proposed project. Pursuant to 50 CFR Part 402.13, we are providing, enclosing, or otherwise identifying the following information:

1. Description of the action considered:

a. The channel would be dewatered to complete demolition of the existing channel, excavation of the new channel cross section, and construction of the new channel elements (drilled pile foundation system, vertical wall segments, filter fabric/rock layer/articulated pavers on the channel bottom, fish passage channel). In addition, a temporary coffer dam would be installed at the downstream end of the channel to complete cutoff wall demolition and articulated revetment installation work in the tidally influenced reach.
b. Excavation of approximately 40,000 cubic yards of material from the proposed channel cross section. Placement of approximately 5,400 cy of rock on the channel bottom beneath the articulate pavers/revetment. The new vertical-walled channel would be approximately 50 feet wide (55 feet under Hollister Avenue Bridge). The fish passage channel would be approximately 2.75 feet lower than the remaining channel bed, with trapezoidal shaped pre-cast weirs spaced at regular intervals throughout the entire length of the channel. The fish passage channel would have a top width of approximately 30 feet and a bottom width of at least 10 feet. The west sidewall would be sloped and the east sidewall would be vertical and formed by the east wall of the main channel. Weirs would include drainage slots to facilitate minimum depths in the fish passage channel to meet NMFS fish passage criteria.
c. Installation of approximately 55 linear feet of new articulated revetment at the upstream

end of the existing concrete channel to transition to the earthen channel, north of the Hollister Avenue Bridge. The articulated revetment will extend over the entire bed and on the lower banks of the channel. Native riparian species will be planted above the revetment on the upper banks. The low-flow fish passage channel would be continued through the articulated revetment section to facilitate fish passage to earthen channel areas upstream of the proposed project. Replacement of the Hollister Avenue Bridge is a project component with the modified channel design but its construction may be delayed due to funding constraints. The articulated revetment upstream of the bridge will be constructed concurrently with bridge replacement.

d. Chain link fencing and flood walls would be variously removed and reconstructed on the east and west sides of the channel in upland areas and along the right-of-way, outside waters of the U.S., to provide additional flood protection in the event of overbank flooding and to demarcate the facility.
e. Native landscaping adjacent to the top of the concrete channel would be installed following construction. In addition, native riparian plants would be replaced in temporary work areas upstream of the Hollister Avenue Bridge.
f. Routine annual maintenance of the reconstructed channel would be conducted in accordance with the Santa Barbara County Flood Control District's Section 404 program permit. The City of Goleta would be responsible for maintenance of the fish passage channel.

2. Description of the specific areas that may be affected by the action (scope of analysis):
Approximately 4,236 linear feet (2.39 acres) of the existing concrete-lined channel would be directly impacted by project activities (0.03 acre permanent impact due to newly constructed articulated revetment upstream of the Hollister Avenue Bridge; 0.08 acre permanent impact at downstream end in existing basin; and 2.28 acres due to temporary construction impacts). Water quality parameters (e.g., turbidity, pH) may be indirectly affected during construction activities including water diversion, dewatering, return flow from the dewatering system, demolition of the existing concrete-lined channel, excavation, and installation of the channel elements and composite revetment upstream of the Hollister Avenue Bridge.

3. Description of any listed species or critical habitat that may be affected by the action:
Information contained in the Section 404 application indicates that salmonids occur in the watershed, and individuals have been observed in the upper watershed in previous studies. In addition, critical habitat designated in 2005 includes San Jose Creek (CDFG, BIOS, Public Viewer). San Jose Creek flows directly to the Goleta Slough which discharges to the Pacific Ocean east of Goleta Pier; however the sand berm at the outlet of Goleta Slough and the concrete-lined channel (Stoecker 2002) presents a barrier to migration. Approximately 0.03 acre (55 linear feet) of critical habitat would be

permanently impacted by the installation of new articulated revetment in the bed of San Jose Creek upstream of the Hollister Avenue Bridge and approximately 0.08 acre (90 linear feet) of critical habitat would be permanently impacted by the installation of articulated revetment at the downstream channel transition to the earthen channel in the tidally influenced reach.

4. **Description of the manner in which the action may affect any listed species or critical habitat and an analysis of any cumulative impacts:** Review of the primary constituent elements described in the critical habitat designation shows one of the six PCE's are present in the project area. Specifically, estuarine areas free of obstruction with water quantity and quality to support adults and juveniles is present in Goleta Slough, which occurs at the downstream end of the concrete-lined channel. Installation (and removal) of temporary water diversion and dewatering devices as well as return water from the dewatering system are not expected to permanently increase turbidity downstream of the project site because turbidity control measures would be installed and maintained throughout construction activities. Water diversion and dewatering devices, and the disturbance caused by construction activities could also cause steelhead to avoid the project area. The proposed vertical walls, low flow fish passage channel, fish passage weirs, and composite revetment at the upstream end of the project area would result in a permanent change to the channel configuration, but these changes are expected to facilitate rather than hinder fish passage. Shade along the existing concrete-lined channel is virtually absent until the Hollister Avenue Bridge. Some shade would be restored along the proposed vertical channel over time, as trees increase in size and canopy cover. Temporary construction impacts to vegetation upstream of the Hollister Avenue Bridge would further reduce shade until riparian plants within the composite revetment and along the channel are reestablished. A temporary reduction in shade upstream of the Hollister Avenue Bridge may result in localized temperature increases until vegetation recovers; however, an additional 55 linear feet of direct sunlight on the channel is considered minimal relative to the existing conditions in the concrete-lined portion of the channel downstream of the Hollister Avenue Bridge. Water velocities are not expected to increase through the project site following construction; although water will be concentrated in the low flow channel during dry periods of the year to address NMFS fish passage criteria. Annual routine channel maintenance and maintenance of the low flow channel and fish passage weirs could temporarily affect southern steelhead and cause fish to avoid the work area and be affected by turbidity in the event sediment is removed between storms. Most maintenance work would be performed during the dry season when minimal to no flow is present. Turbidity may be temporarily increased during maintenance activities and concrete repairs could occur. Standard turbidity control and concrete BMPs would be implemented during routine maintenance to reduce impacts.

5. **Relevant reports, including any environmental impact statement, environmental assessment, or biological assessment prepared:** A biological resources survey report was submitted with the revised application and was previously submitted to your agency. In addition, a wildlife survey report (dated January 2007) was included in the draft and final Mitigated Negative Declaration (MND, dated April 2008) and submitted to you with the original consultation request dated December 9, 2010. The biological resources and wildlife survey reports summarize the results of California red-legged frog protocol surveys and an inventory of other species observed. The Biological Resources section of the MND provides information from the California Natural Diversity Database (CNDDB 2006) and from NMFS (no date) on observations of southern steelhead, and indicates that no sensitive plants or wildlife were observed at the Hollister Avenue Bridge or approximately 1,500 linear feet upstream or downstream from the bridge during the surveys (SAIC 2005). Table 2 of the MND indicates one steelhead was captured in San Jose Creek in 1975.

   Numerous alternatives (approximately 75) to address flow capacity and fish passage were evaluated and are described in the MND, but none of the other alternatives met all the objectives of the original project design within the physical boundaries of the project site. In response to the original design, NMFS and California Department of Fish and Game raised concerns over the channel and fish passage design in the original project, which resulted in the re-designed project.

6. **Any other relevant available information on the action, the affected listed species, or critical habitat:** The construction period would be approximately 480 working days with up to 277 working days (assuming work 1 April through 30 Nov) in San Jose Creek, and all earthmoving and concrete work is expected to occur during the dry season (April through October, or November if no rain occurs). All concrete will be recycled at a local facility. Excavated material will be taken to an approved upland disposal site for reuse.

It is presumed informal consultation will be initiated upon your receipt of this letter. If you would like to receive "additional data", which you believe would provide a better information base from which to conclude this process and formulate a biological opinion, please contact Theresa Stevens, Ph.D. of my staff at 805-585-2146 or via e-mail at Theresa.Stevens@usace.army.mil during the 30 day consultation period.

Sincerely,

Aaron O. Allen, Ph.D.
Chief, North Coast Branch
Regulatory Division

Cf: Ms. Rosemary Gaglione, P.E., City of Goleta, 130 Cremona Drive, Suite B, Goleta, CA 93117

APPENDIX B
DELINEATION OF AQUATIC RESOURCES

WETLAND DETERMINATION DATA FORM - Arid West Region

Project/Site:	Hollister Bridge	City/County:	Santa Barbara	Sampling Date: 10/8/2013	
Applicant/Owner:	City of Goleta	State: CA		Sampling Point: SP1	
Investigator(s):	J. Love, E. Gevirtz	Section, Township, Range:			
Landform (hillslope, terrace, etc.): terrace		Local Relief (concave, convex, none): concave/none		Slope (%): 0-1	
Subregion (LRR): City of Goleta	Lat:	Long:		Datum:	
Soil Map Unit Name:		NWI Classification: N/A			
Are climatic/hydrological conditions on the site typical for this time of the year?		☑ Yes ☐ No			
Are Vegetation, ☐ Soil, ☐ or Hydrology ☐ significantly disturbed?		Are "Normal Circumstances" Present?		☑ Yes ☐ No	
Are Vegetation, ☐ Soil, ☐ or Hydrology ☐ naturally problematic?		(If needed, explain answers in remarks)			

SUMMARY OF FINDINGS - Attach site map showing sampling point locations, transects, important features, etc.

Hydrophytic Vegetation Present?	☐ Yes ☑ No	**Is the Sampled Area within a Wetland?**	☐ Yes ☑ No
Hydric Soil Present?	☐ Yes ☑ No		
Wetland Hydrology Present?	☐ Yes ☑ No		

Remarks:
Sampled Area is located on small terrace adjacent to OHWM; terrace is mostly flat with a lower depression on it.

VEGETATION

Tree Stratum — Plot size:	Absolute % Cover	Dominant Species?	Indicator Status
1.			
2.			
3.			
4.			
Total Cover:			
Sapling/Shrub Stratum — Plot size:			
1.			
2.			
3.			
4.			
5.			
Total Cover:			
Herb Stratum — Plot size: 20' x 5 '			
1. Vinca major	5	Y	NI
2. Xanthium strumarium	1	N	FAC
3. Clematis sp.	<1	N	FAC/FACU
4. Agrostis Viridis	<1	N	NI
5. Popolpoyon monspeliensis (dead)	<1	N	FACW
6. Epilobium cilliatum (dead)	3	Y	FACW
7. Pennisetum clandestinum	<1	N	FACU
8.			
Total Cover:	13		
Woody Vine Stratum — Plot size: 20' x 5'			
1. Rubus ursinus	10	Y	FACU
2.			
Total Cover:	10		
% Bare Ground in Herb Stratum: 77	% Cover of Biotic Crust:		

Dominance Test Worksheet:

Number of Dominant Species That Are OBL, FACW, or FAC:	1 (A)
Total Number of Dominant Species Across All Strata:	3 (B)
Percent of Dominant Species That Are OBL, FACW, or FAC:	33% (A/B)

Prevalence Index worksheet:

Total % Cover of:		Multiplied by:	
OBL species	0	x1 =	0
FACW species	4	x2 =	8
FAC species	1	x3 =	3
FACU species	12	x4 =	48
UPL species	6	x5 =	30
Column Totals:	23 (A)		89 (B)

Prevalence Index = B/A = 3.869565217

Hydrophytic Vegetation Indicators:

- ☐ Dominance Test is >50%
- ☐ Prevalence Index is ≤3.0[1]
- ☐ Morphological Adaptations[1] (Provide supporting data in Remarks or on a separate sheet)
- ☐ Problematic Hydrophytic Vegetation[1] (Explain)

[1]Indicators of hydric soil and wetland hydrology must be present.

Hydrophytic Vegetation Present? ☐ Yes ☑ No

Remarks:
Bare ground also has leaf litter

SALLAS surrounding

SOIL

Sampling Point: SP1

Profile Description: (Describe to the depth needed to document the indicator or confirm the absence of indicators.)

Depth	Matrix		Redox Features					
(inches)	Color (moist)	%	Color (moist)	%	Type[1]	Loc[2]	Texture	Remarks
0-10	10YR 3/2	100	N/A				LoSa	

[1]Type: C=Concentration, D=Depletion, RM=Reduced Matrix. [2]Location: PL=Pore Lining, RC=Root Channel, M=Matrix

Hydric Soil Indicators: (Applicable to all LRRs, unless otherwise noted.)

- ☐ Histosol (A1)
- ☐ Histic Epipedon (A2)
- ☐ Black Histic (A3)
- ☐ Hydrogen Sulfide (A4)
- ☐ Stratified Layers (A5) (**LRR C**)
- ☐ 1 cm Muck (A9) (**LRR D**)
- ☐ Depleted Below Dark Surface (A11)
- ☐ Thick Dark Surface (A12)
- ☐ Sandy Mucky Mineral (S1)
- ☐ Sandy Gleyed Matrix (S4)
- ☐ Sandy Redox (S5)
- ☐ Stripped Matrix (S6)
- ☐ Loamy Mucky Mineral (F1)
- ☐ Loamy Gleyed Matrix (F2)
- ☐ Depleted Matrix (F3)
- ☐ Redox Dark Surface (F6)
- ☐ Depleted Dark Surface (F7)
- ☐ Redox Depressions (F8)
- ☐ Vernal Pools (F9)

Indicators for Problematic Hydric Soils[3]:

- ☐ 1 cm Muck (A9) (**LRR C**)
- ☐ 2 cm Muck (A10) (**LRR B**)
- ☐ Reduced Vertic (F18)
- ☐ Red Parent Material (TF2)
- ☑ Other (Explain in Remarks)

[3]Indicators of hydrophytic vegetation and wetland hydrology must be present.

Restrictive Layer (if present):
Type: _____
Depth (inches): _____

Hydric Soil Present? ☐ Yes ☑ No

Remarks:
Argentine ants in pit.
Pit ends at 10in due to collapse of sandy soil.
Naturally problematic sandy soil

HYDROLOGY

Wetland Hydrology Indicators:

Primary Indicators (any one indicator is sufficient)

- ☐ Surface Water (A1)
- ☐ High Water Table (A2)
- ☐ Saturation (A3)
- ☐ Water Marks (B1) (**Nonriverine**)
- ☐ Sediment Deposits (B2) (**Nonriverine**)
- ☐ Drift Deposits (B3) (**Nonriverine**)
- ☐ Surface Soil Cracks (B6)
- ☐ Inundation Visible on Aerial Imagery (B7)
- ☐ Water-Stained Leaves (B9)
- ☐ Salt Crust (B11)
- ☐ Biotic Crust (B12)
- ☐ Aquatic Invertebrates (B13)
- ☐ Hydrogen Sulfide Odor (C1)
- ☐ Oxidized Rhizopheres along Living Roots (C3)
- ☐ Presence Of Reduced Iron (C4)
- ☐ Recent Iron Reduction in Plowed Soils (C6)
- ☐ Other (Explain in Remarks)

Secondary Indicators (2 or more required)

- ☐ Water Marks (B1) (**Riverine**)
- ☐ Sediment Deposits (B2) (**Riverine**)
- ☐ Drift Deposits (B3) (**Riverine**)
- ☐ Drainage Patterns (B10)
- ☐ Dry-Season Water Table (C2)
- ☐ Thin Muck Surface (C7)
- ☐ Crayfish Burrows (C8)
- ☐ Saturation Visible on Aerial Imagery (C9)
- ☐ Shallow Aquitard (D3)
- ☐ FAC-Neutral Test (D5)

Field Observations:

Surface Water Present? ☐ Yes ☐ No Depth (inches): _____
Water Table Present? ☐ Yes ☐ No Depth (inches): _____
Saturation Present? (Includes capillary fringe) ☐ Yes ☐ No Depth (inches): _____

Wetland Hydrology Present? ☐ Yes ☑ No

Describe Recorded Data (stream gauge, monitoring well, aerial photos, previous inspections), if available:

Remarks:
Drainage pattern in channel adjacent to SP. Fac-neutral 1:2

APPENDIX C
TREE SURVEY DATA

APPENDIX C
MATURE TREES WITHIN AREA OF DIRECT IMPACT
HOLLISTER AVENUE BRIDGE REPLACEMENT
OCTOBER 2013 AND OCTOBER 2014

Scientific Name	Common Name	Tree #	DBH Trunk 1	DBH Trunk 2	DBH Trunk 3	DBH Trunk 4	DBH Trunk 5	DBH Trunk 6	Multiple Trunks	Notes	Southern API (S) or Habitat Restoration Opportunity Zone (HROZ)
Juglans californica	Southern California Black Walnut	1	14	6							S
Juglans californica	Southern California Black Walnut	2	8	8	6	6	<6				S
Juglans californica	Southern California Black Walnut	3	10	8	12	15	15	>6	>6		HROZ
Juglans californica	Southern California Black Walnut	4									HROZ
Juglans californica	Southern California Black Walnut	5	24								HROZ
Juglans californica	Southern California Black Walnut	6	6	6							S
Juglans californica	Southern California Black Walnut	7	13.0								HROZ
Juglans californica	Southern California Black Walnut	8	8.9								HROZ
Juglans californica	Southern California Black Walnut	9	9.4								HROZ
Platanus racemosa	Western Sycamore	1	34							Previous survey tag T-2	HROZ
Platanus racemosa	Western Sycamore	2	7							Previous survey tag T-1	HROZ

APPENDIX C (CONTINUED)
MATURE TREES WITHIN AREA OF DIRECT IMPACT
HOLLISTER AVENUE BRIDGE REPLACEMENT
OCTOBER 2013 AND OCTOBER 2014

Scientific Name	Common Name	Tree #	DBH Trunk 1	DBH Trunk 2	DBH Trunk 3	DBH Trunk 4	DBH Trunk 5	DBH Trunk 6	Multiple Trunks	Notes	Southern API (S) or Habitat Restoration Opportunity Zone (HROZ)
Platanus racemosa	Western Sycamore	3	32								S
Platanus racemosa	Western Sycamore	4	38								S
Platanus racemosa	Western Sycamore	5	24.8								HROZ
Platanus x hispanica(?)	London Plane Tree(?)	5	11							Planted	S
Populus fremontii	Freemont Cottonwood	1	7.7								HROZ
Populus fremontii	Freemont Cottonwood	2	8.4								HROZ
Quercus agrifolia	Coast Live Oak	1	16								HROZ
Quercus agrifolia	Coast Live Oak	2	24								S
Quercus agrifolia	Coast Live Oak	3	28								S
Quercus agrifolia	Coast Live Oak	4	29								HROZ
Quercus sp.	Oak	1	4	4	3	2					S
Quercus sp.	Oak	2							<2		S
Salix lasiolepis	Arroyo Willow	1	4								HROZ
Salix lasiolepis	Arroyo Willow	2	8	5					<2		S
Salix lasiolepis	Arroyo Willow	3							<2	Was cut and has regrown	S
Salix lasiolepis	Arroyo Willow	4	8	14	14					Trunks 2 & 3 close to	HROZ

APPENDIX C (CONTINUED)
MATURE TREES WITHIN AREA OF DIRECT IMPACT
HOLLISTER AVENUE BRIDGE REPLACEMENT
OCTOBER 2013 AND OCTOBER 2014

Scientific Name	Common Name	Tree #	DBH Trunk 1	DBH Trunk 2	DBH Trunk 3	DBH Trunk 4	DBH Trunk 5	DBH Trunk 6	Multiple Trunks	Notes	Southern API (S) or Habitat Restoration Opportunity Zone (HROZ)
										ground below BH	
Salix lasiolepis	Arroyo Willow	5	20								HROZ
Salix lasiolepis	Arroyo Willow	6							<2		S
Salix lasiolepis	Arroyo Willow	7							<2	Polygon of approx. 32 trees	S
Salix lasiolepis	Arroyo Willow	8							<2	Polygon of approx. 7 trees	HROZ
Salix lasiolepis	Arroyo Willow	9	14.0								HROZ
Salix lasiolepis	Arroyo Willow	10	5.0								HROZ
Salix lasiolepis	Arroyo Willow	11	4.6								HROZ
Salix lasiolepis	Arroyo Willow	12	6.5								HROZ
Salix lasiolepis	Arroyo Willow	13	5.5								HROZ
Salix lasiolepis	Arroyo Willow	14	4.5								HROZ
Salix lasiolepis	Arroyo Willow	15	6.5								HROZ
Unknown	Unknown	1	dead							No leaves	O
Unknown	Unknown	2	dead							No leaves	O

APPENDIX D
REPORT OF WORK FOR BAT SURVEYS AND MITIGATION DEVELOPMENT FOR HOLLISTER AVENUE BRIDGE OVER SAN JOSE CREEK

PAUL A. HEADY III AND WINIFRED F. FRICK
Central Coast Bat Research Group
P.O. Box 1352 Aptos, CA 95001
(831) 662-1338 tel/fax
pheady3@gmail.com/fredfrick@gmail.com

To: Elihu Gevirtz

Date: November 25, 2014

RE: Report of Work for Bat Surveys and Mitigation Development for Hollister Avenue Bridge over San Jose Creek

INTRODUCTION

During 2016 and 2017 a replacement bridge will be constructed in place of the Hollister Avenue Bridge over San Jose Creek in Goleta California. Bat surveys were conducted by Central Coast Bat Research Group.

Special-status bat species

There are thirteen bat species that could occur in the Santa Barbara region. Six of these species have some level of special-status (see Table 1). Many of these species can be expected to roost in suitable building and bridge features (Table 2).

Roosts

Bats use structures, such as bridges and buildings, for roosting habitats, including day roosts, night roosts, and maternity roosts. Day roosts are areas where bats are able to spend the non-active period of the day resting or in torpor, depending on the weather conditions. Day roosts provide shelter from the elements and safety from predators. Night roosts are used by bats to rest between foraging bouts, to allow for digestion of prey, to escape from predators, as shelter from weather, and possibly for social purposes. Night roosts are typically sites that retain heat from the day to aid the bats in maintaining the higher metabolism necessary for digestion. Maternity roosts are sites that provide protection from the elements and predators and provide the correct thermal environment for reproduction. Maternity roost sites tend to be warmer in temperature because breeding females need to maintain a high metabolism to aid in lactation and juvenile bats need to keep warm to maintain a metabolic rate that allows for rapid growth. Winter roosts are usually areas that have a stable low temperature suitable for hibernating or prolonged periods of torpor.

METHODS

Bridge surveys

The bridge was visually investigated to determine if bats were using the structure for day roosting, night roosting, or maternity roosts. The bridge was surveyed during the day for

day and maternity roost assessment and at night to check for night roost use. All bats were identified to species and all sign such as guano, staining, or culled insect parts, was identified and quantified.

On October 10th 2014 Hollister Avenue Bridge over San Jose Creek was surveyed to determine the type and level of bat use. Mexican free-tailed bats (*Tadarida brasiliensis*) TABR, and Yuma myotis (*Myotis yumanensis*) MYYU, were observed day roosting. Guano and staining indicate that large numbers of bats use the roost on a regular basis. 90 TABR and 3 MYYU were observed roosting in 12 of the 19 crevices. The number of bats observed appears to be less than the staining and guano indicate. It is likely that larger numbers of bats occupy the bridge at other times of the year. It is recommended that the bridge be surveyed during the winter months December through February, and during the maternity season May through August. The results of these surveys would provide information as to the most appropriate time to exclude the bats prior to bridge removal. Bats can be humanely excluded using plastic curtains hung on each side of the crevices as illustrated in **PHOTO 1**. After bats have been excluded the gaps can then be filled with expanding foam to prevent occupation until bridge removal.

PHOTO 1

Replacement habitat is being designed into the replacement bridge. This habitat will be 4 crevices 1” wide 12” deep. The crevices will run the length of the bridge between each abutment resulting in four crevices 58’ in length with a total of 232 linear feet of habitat. This habitat could accommodate up to 4,000 bats.

Table 1

Bat Species Likely or Known to Occur in the Santa Barbara Region

Family VESPERTILIONIDAE (Plain-nosed or mouse-eared bats)

Myotis yumanensis	Yuma myotis	
Myotis evotis	Long-eared myotis	**FSC/BLMS**
Myotis thysanodes	Fringed myotis	**FSC/ BLMS/WBWG**
Myotis volans	Long-legged myotis	**FSC/ BLMS/WBWG**
Myotis californicus	California myotis	
Eptesicus fuscus	Big brown bat	
Corynorhinus townsendii	Townsend's big-eared bat	**CSC/FSC/FSS/BLMS/WBWG**
Antrozous pallidus	Pallid bat	**CSC/FSS/BLMS/WBWG**
Lasiurus cinereus	Hoary bat	
Lasiurus blossevillii	Western red bat	**FSS/WBWG**
Lasionycteris noctivagans	Silver-haired bat	

Family MOLOSSIDAE (Free-tailed bats)

Tadarida brasiliensis	Mexican free-tailed bat	
Eumops perotus	Western mastiff bat	**FSC/CSC/BLMS/WBWG**

FSC = Federal Special Concern species (former Category 2 candidates for ESA listing)
CSC = California Department of Fish and Game's California Special Concern species
FSS = Forest Service Sensitive species
BLMS = Bureau of Land Management Sensitive species
WBWG = Western Bat Working Group High Priority species

Table 2
Species known to use structure roosts

Species	Structure Roost Type
M.yumanensis	DR, NR, WR
M.evotis	NR,WR
M. thysanodes	DR, NR
M. volans	DR, NR, WR
M. californicus	DR, NR
E. fuscus	DR, NR
C. townsendii	DR, NR
A. pallidus	DR, NR
L. noctivagans	NR,WR
T. brasiliensis	DR, NR

Species not associated with structures

L. cinereus	Trees
L. blossevilli	Trees

NR = night roost; DR = day roost; WR = winter roost

Pierson, E.D., W.E. Rainey, and C.J. Corben. 2001. Seasonal patterns of bat distribution along an altitudinal gradient in the Sierra Nevada. Technical report for California Department of Transportation, California State University at Sacramento Foundation, The Yosemite Association, and The Yosemite Fund.

APPENDIX E
SITE PHOTOGRAPHS

Photo 1
Hollister Avenue Bridge Looking Northeast

Photo 2
North Side of Hollister Avenue Bridge
Looking North

Photo 3
South Side of Hollister Avenue Bridge
Looking East

Photo 4
North Side of Hollister Ave. Terrace Above East Side of Creek
Looking Northwest

Photo 5
North Side of Hollister Ave. Arroyo Willows and Mugwort on Terrace above East Side of Creek

Photo 6
North Side of Hollister Ave. Terrace Above West Side of Creek

Photo 7
North Side of Hollister Ave. Concrete Apron in the Creek Channel
Looking North

Photo 8
North Side of Hollister Ave. Channel Under Bridge
Looking South

Photo 9
North Side of Hollister Ave. Creek Channel
Looking South

Photo 10
Channel South of Hollister Avenue

Photo 11
North Side of Hollister Ave. Wetland Delineation Pit

Photo 12
North Side of Hollister Ave. Wetland Delineation Location

Photo 13
Channel South of Hollister Avenue
Construction in Progress

Photo 14
Channel of San Jose Creek Looking North Toward Hollister Avenue
Construction Complete

Photo 15
Channel of San Jose Creek Looking South
Construction Complete

Photo 16
Channel of San Jose Creek
Habitat Restoration Opportunity Area

Photo 17
Giant Reed and Arroyo Willow
Habitat Restoration Opportunity Area

APPENDIX F
SPECIES OBSERVED

TABLE F-1
PLANT SPECIES OBSERVED AT HOLLISTER AVENUE BRIDGE OVER SAN JOSE CREEK, GOLETA, CALIFORNIA[1]

Common Name	Scientific Name	Native/ Exotic[2]
California mugwort	*Artemisia douglasiana*	N
Arundo, giant reed	*Arundo donax*	E
Wild oat	*Avena fatua*	E
Ripgut brome	*Bromus diandrus*	E
Red brome	*Bromus madritensis* ssp. *rubens*	E
Italian thistle	*Carduus pycnocephalus*	E
Clematis	*Clematis* sp.	N
Poison hemlock	*Conium maculatum*	E
Flatsedge	*Cyperus eragrostis*	N
Umbrella plant	*Cyperus involucratus*	E
Jimson weed	*Datura wrightii*	N
Cape ivy	*Delairea odorata* (*Senecio mikanioides*)	E
Giant ryegrass	*Elymus condensatus* (*Leymus condensatus*)	N
Willow herb	*Epilobium ciliatum*	N
Blue gum	*Eucalyptus globulus*	E
Gopher spurge	*Euphorbia lathyrus*	E
English ivy	*Hedera helix*	E
Summer mustard	*Hirschfeldia incana* (*prev. Brassica geniculata*)	E
Ornamental morning glory	*Ipomoea* sp.	E
Southern California black walnut	*Juglans californica*	N
Basket rush	*Juncus textilis*	N
Italian ryegrass	*Lolium multiflorum*	E
Cheeseweed	*Malva parviflora*	E
wild cucumber	*Marah* sp.	N
Smallflower melicgrass	*Melica imperfecta*	N
Sweetclover	*Melilotus* sp.	E
Water cress	*Nasturtium officinale*	N
Tree tobacco	*Nicotiana glauca*	E
Kikuyu grass	*Pennisetum clandestinum*	E
Bristly ox-tongue	*Picris echioides*	E
Smilo grass	*Piptatherum miliaceum*	E
Narrowleaf plantain	*Plantago lanceolata*	E

TABLE F-1 (CONTINUED)
PLANT SPECIES OBSERVED AT HOLLISTER AVENUE BRIDGE OVER SAN JOSE CREEK, GOLETA, CALIFORNIA

Common Name	Scientific Name	Native/ Exotic[2]
Western sycamore	*Platanus racemosa*	N
Water bent grass	*Polypogon viridis* (*Argrostis viridis*)	E
Fremont cottonwood	*Populus fremontii*	N
Hollyleaf cherry	*Prunus ilicifolia*	N
Coast live oak	*Quercus agrifolia*	N
Ornamental oak	*Quercus* sp.	E
Castor bean	*Ricinus communis*	E
California blackberry	*Rubus ursinus*	N
Curly dock	*Rumex crispus*	E
Arroyo willow	*Salix lasiolepis*	N
Peruvian peppertree	*Schinus molle*	E
Douglas nightshade	*Solanum douglasii*	N
Sow-thistle	*Sonchus* spp.	E
Hedge parsley	*Torilis arvensis*	E
Poison oak	*Toxicodendron diversilobum*	N
Canyon sunflower	*Venegasia carpesioides*	N
Periwinkle	*Vinca major*	E
Cocklebur	*Xanthium strumarium*	N

1 Based on URS surveys June 24 and October 8, 2013 and November 11, 2014.

2 Notes: N = Native, E = Exotic, non-native.

TABLE F-2
ANIMAL SPECIES OBSERVED AT HOLLISTER AVENUE BRIDGE OVER SAN JOSE CREEK, GOLETA, CALIFORNIA[1]

Common Name	Scientific Name
Crayfish	
Mosquito fish	
Monarch butterfly	*Danaus plexippus*
Baja California treefrog	*Pseudacris hypochondriaca* subsp. *hypochondriaca*[2]
Western fence lizard	*Sceloporus occidentalis*
Spotted sandpiper	*Actitis macularia*
Turkey vulture	*Cathartes aura*
Red-tailed hawk	*Buteo jamaicensis*
Red-shouldered hawk	*Buteo lineatus*
Great blue heron	*Ardea herodias*
Green heron	*Butorides virescens*
Mallard	*Anas platyrhynchos*
Mourning dove	*Zenaida macroura*
Rock dove	*Columba livia*
Anna's hummingbird	*Calypte anna*
Nuttall's woodpecker	*Picoides nuttallii*
Acorn woodpecker	*Melanerpes formicivorus*
American crow	*Corvus brachyrhynchos*
Western scrub jay	*Apelocoma californica*
Cliff swallow	*Petrochelidon pyrrhonota*
Ash-throated flycatcher	*Myiarchus cinerascens*
Black phoebe	*Sayornis nigricans*
Oak titmouse	*Baeolophus inornatus*
Bushtit	*Psaltriparus minimus*
Bewick's wren	*Thryomanes bewickii*
House wren	*Troglodytes aedon*
Northern mockingbird	*Mimus polyglottos*
Common yellowthroat	*Geothlypis trichas*
Hutton's vireo	*Vireo huttoni*
Spotted towhee	*Pipilo maculatus*
California towhee	*Pipilo crissalis*
Song sparrow	*Melospiza melodia*
White-crowned sparrow	*Zonotrichia leucophyrys*

TABLE F-2
ANIMAL SPECIES OBSERVED AT HOLLISTER AVENUE BRIDGE OVER SAN JOSE CREEK, GOLETA, CALIFORNIA

Common Name	Scientific Name
House sparrow	*Passer domesticus*
House finch	*Carpodacus mexicanus*
Lesser goldfinch	*Carduelis psaltria*
European starling	*Sturnus vulgaris*
Striped skunk	*Mephitis mephitis*
Raccoon	*Procyon lotor*

[1] Based on surveys by SAIC (2007), Entrix (2010), and URS observations June 24 and October 8, 2013 and November 11, 2014.

[2] The taxonomy of treefrogs in California is in flux and the boundaries of their respective distributions is unclear.

APPENDIX D
ARCHAEOLOGICAL SURVEY REPORT

ARCHAEOLOGICAL SURVEY REPORT

For The

Hollister Avenue Bridge Replacement Project

City of Goleta, County of Santa Barbara, California

05-SB-0-GLTA
Hollister Av Br Replacement
BRLS-5481(013)

Reviewed by:

Kelda Wilson, Principal Investigator – Archaeology
District 5 PQS
California Department of Transportation
Division of Environmental Planning
50 Higuera Street
San Luis Obispo, CA 93401

Prepared by:

Brent Leftwich, PhD, RPA.
and
Craig. Woodman, M.A., RPA

URS Corporation
130 Robin Hill Road, Suite 100
Santa Barbara, CA 93117

Goleta USGS 7.5-Minute Quadrangle
APE Acreage: 2.9
Resources: None

November 2014

TABLE OF CONTENTS

Section **Page**

1.0 SUMMARY OF FINDINGS 1-1
2.0 INTRODUCTION 2-1

2.1 PROJECT BACKGROUND AND MAPS 2-1
2.2 PERSONNEL QUALIFICATIONS 2-1

3.0 HIGHWAY PROJECT LOCATION AND DESCRIPTION 3-1
4.0 SOURCES CONSULTED 4-1

4.1 CALIFORNIA HISTORIC RESOURCES INFORMATION SYSTEM RECORDS SEARCH 4-1
4.2 STUDIES WITHIN OR ADJACENT TO THE AREA OF POTENTIAL EFFECTS 4-2
4.3 SUMMARY OF NATIVE AMERICAN CONSULTATION 4-3

5.0 BACKGROUND 5-1

5.1 ENVIRONMENT 5-1
5.2 SUMMARY OF PREVIOUS DISTURBANCES WITHIN THE AREA OF POTENTIAL EFFECTS 5-1
5.3 ETHNOGRAPHY 5-2
5.4 PREHISTORY 5-3

5.4.1 The Paleoindian Period (Prior to ca. 8,000 BP) 5-3
5.4.2 The Early Period (ca. 8,000 BP to 3,400 BP) 5-3
5.4.3 The Middle Period (3,400 BP to 800 BP) 5-4
5.4.4 The Late Period (800 BP to ca. 200 BP) 5-4

5.5 HISTORY 5-4

5.5.1 Early Contact 5-4
5.5.2 Mission Period 5-5
5.5.3 Rancho Period 5-5
5.5.4 Americanization and Urbanization 5-5
5.5.5 World War II and Beyond 5-6

6.0 FIELD METHODS 6-1
7.0 STUDY FINDINGS AND CONCLUSIONS 7-1

Section **Page**

8.0 OTHER RESOURCES 8-1

8.1 UNIDENTIFIED CULTURAL MATERIALS 8-1

9.0 REFERENCES CITED 9-1

List of Tables **Page**

Table 4-1 Previous Archaeological Studies in the Project APE 4-1

List of Appendices

Appendix A Figures
Appendix B Native American Consultation
Appendix C Central Coast Information Center Records Search Documentation
Appendix D SHPO Concurrence Letter for the San Jose Creek Capacity Improvement and Fish Passage Project

SECTION 1.0
SUMMARY OF FINDINGS

This Archaeological Survey Report (ASR) presents the findings of studies conducted within the Archaeological Area of Potential Effects (APE) for the Hollister Avenue Bridge Replacement Project, in the City of Goleta, Santa Barbara County, California (see Figures 1-3, attached). The bridge spans San Jose Creek.

The APE has been previously surveyed numerous times (Chartkoff 1967, Wilcoxon *et al.* 1982, SAIC 2009, URS 2009, Maki 2012) with negative results. Dr. Leftwich conducted a cultural resources survey of the APE on August 29, 2013, and found no cultural resources, confirming previous studies. In November 2014 the APE was expanded north to include approximately one additional acre of land that may be used for biological mitigation. Craig Woodman conducted supplemental survey of this area on November 13, 2014. The vast majority of the project area has been previously disturbed by the construction of Hollister Avenue, the associated bridge, the concrete channelization of San Jose Creek, and residential development.

Archaeological surveys were carried out in conformity with the January 1, 2004 *Programmatic Agreement among the Federal Highway Administration, the Advisory Council on Historic Preservation, the California State Historic Preservation Officer, and the California Department of Transportation Regarding Compliance with Section 106 of the National Historic Preservation Act, As it Pertains to the Administration of the Federal-Aid Highway Program in California* (Section 106 PA).

It is the California Department of Transportation's (Caltrans) policy to avoid cultural resources whenever possible. Further investigations may be needed if the site(s) cannot be avoided by the project. If buried cultural materials are encountered during construction, it is Caltrans policy that work stop in that area until a qualified archaeologist can evaluate the nature and significance of the find. Additional surveys will be required if the project changes to include areas not previously surveyed.

SECTION 2.0
INTRODUCTION

2.1 PROJECT BACKGROUND AND MAPS

The Caltrans Office of Structure Maintenance has classified the existing four-lane Hollister Avenue Bridge (Bridge No. 51C-0027) over the San Jose Creek Channel as functionally obsolete. The existing bridge was constructed in 1964 and widened in 1981, and it consists of prestressed concrete voided slab units supported on concrete abutments and driven piles. It spans 104 feet wide and 45 feet long. The purpose of the project is to replace the existing Hollister Avenue Bridge with a new bridge that will convey 100-year flood flows and meet current design standards providing a safe crossing over San Jose Creek for vehicles and pedestrians.

This ASR includes Figure 1 Project Vicinity Map, Figure 2 Project Location and Survey Coverage Map and Figure 3 APE Map.

Portions of the APE have been previously surveyed multiple times (Chartkoff 1967, Wilcoxon *et al.* 1982, SAIC 2009, URS 2009, Maki 2012) with negative results. URS conducted a cultural resources survey of the APE in September 2013 and November 2014 and found no cultural resources, confirming previous studies. The vast majority of the project area has been previously disturbed by the construction of Hollister Avenue, the associated bridge, the concrete channelization of San Jose Creek and residential development on the east side of the creek.

2.2 PERSONNEL QUALIFICATIONS

The draft ASR was completed by Brent Leftwich, Ph.D., R.P.A., and subject to quality assurance review and finalization by Project Manager Craig Woodman, M.A., R.P.A. (2004). Mr. Leftwich is a senior archaeologist and principal investigator with over 16 years of experience in archaeology in both cultural resource management and academics. Dr. Leftwich has conducted dozens of archaeological surveys in Santa Barbara County and in many other areas in Central and Southern California. Craig Woodman has more than 25 years experience managing hundreds of large and small-scale archaeological, historical and paleontological surveys, evaluations and data recovery projects throughout California and other parts of the nation for federal, state and local agencies and private sector clients.

SECTION 3.0
HIGHWAY PROJECT LOCATION AND DESCRIPTION

The Hollister Avenue Bridge (Bridge No. 51C-0027) is a four-lane bridge spanning San Jose Creek and it is adjacent to and west of the State Route 217/Hollister Avenue Interchange (see Figures 1-3). It was constructed in 1964 and widened in 1981, and it consists of prestressed concrete voided slab units supported on concrete abutments and driven piles. It spans 104 feet wide and 45 feet long. The Caltrans Office of Structure Maintenance has deemed this structure as functionally obsolete, mainly due to waterway inadequacy. The existing bridge can only convey 25-year flood flows and contributes to flooding that occurs in the Old Town Goleta area. In addition, the existing bridge abutments are deteriorating due to reactive aggregate. This project falls within Caltrans 5th District, and the Project Number is BRLS-5481(013).

The primary purpose of the proposed project is to replace the existing Hollister Avenue Bridge with a new bridge that will convey 100-year flood flows and meet current design standards providing a safe crossing over San Jose Creek for vehicles and pedestrians.

The existing bridge will be replaced with a new structure that will clear span the creek and be approximately 68 feet in length. The typical roadway section will consist of four 12-foot wide through traffic lanes, bicycle lanes/shoulders, 10-foot-wide sidewalks and a median. The bridge type will be a cast-in-place post-tensioned concrete slab. The overall width and configuration of the proposed bridge is controlled by the layout of the roundabout located at the State Route 217 Southbound on- and off-ramps/Hollister Avenue intersection proposed as part of the Ekwill Street and Fowler Road Extensions Project. The centerline of the new bridge alignment is oblique and slightly upstream compared to the centerline of the existing bridge.

The new foundations and abutments will be constructed behind the existing abutments. The abutments will be supported on cast-in-drilled-hole (CIDH) piles. Driven pile foundations will not be used due to the resulting noise and vibration impacts. The new abutment walls will act as the channel walls within the limits of the new bridge.

Utilities will be relocated, but their precise locations have not yet been designed. Some may be relocated on or within the bridge while others may be relocated via directional boring under San Jose Creek.

This project consists of widening the San Jose Creek channel immediately downstream of the Hollister Avenue Bridge so that the channel conveys 100-year flood flows and conforms to recently constructed portions of the San Jose Creek Capacity Improvement and Fish Passage Project (previously referred to as the San Jose Creek Capacity Improvement Project). The existing concrete lined trapezoidal shaped channel will be replaced with a wider channel with

vertical walls. Cantilever walls utilizing steel reinforced drilled shafts will be used for the channel walls. The channel bottom will be protected with articulated concrete mats, with provisions for fish passage as previously approved in the environmental and other resource agency permits for the San Jose Creek Capacity Improvement and Fish Passage Project.

A privately owned steel bridge located about 100 feet south of the Hollister Avenue Bridge will continue to be utilized for as long as possible to provide vehicular access to the businesses located south of Hollister Avenue and between San Jose Creek and State Route 217 southbound on-ramp, but will ultimately be removed as part of the Project.

This Project also consists of constructing the transition from the improved San Jose Creek Channel under the bridge to the natural creek immediately upstream of the bridge. These channel improvements and transitions have already been proposed and approved by various oversight and permitting agencies as part of the San Jose Creek Capacity Improvement and Fish Passage Project.

As discussed previously, a privately owned steel bridge will be used to provide access during some stages of construction to the parcels located southeast of the Hollister Avenue Bridge. These parcels currently have access to Hollister Avenue by a right-turn in and out driveway to the east of San Jose Creek. This driveway will be closed during construction, and relocated to the west and partially onto the new bridge to fit with the alignment of the new proposed roundabout located directly east of the bridge. In addition, a portion of the channel wall may need to be designed as a cantilever bridge deck to support the driveway over the creek.

The northern part of the APE includes an area that may be used for biological mitigation purposes, including hand removal of invasive giant reed and manual installation of native vegetation.

SECTION 4.0
SOURCES CONSULTED

4.1 CALIFORNIA HISTORIC RESOURCES INFORMATION SYSTEM RECORDS SEARCH

At the request of the City of Goleta, an updated site records search of the project APE was completed. Dr. Brent Leftwich conducted a records search on behalf of URS at the Central Coast Information Center (CCIC) of the California Historic Resources Information System (CHRIS) on August 8, 2013. The archaeological and historic site files of the CCIC were consulted, as were the listings of California Historic Landmarks (CHL), the California Environmental Resource Evaluation System (CERES), the California Register of Historic Resources (CRHR), and the National Register of Historic Places (NRHP), as well as historic maps and aerial photographs. The records search was conducted for all land within a 0.5-mile radius of the project APE. A total of 30 archaeological studies have been previously conducted within a 0.5-mile radius of the project APE, 5 of which are in the current APE.

TABLE 4-1
PREVIOUS ARCHAEOLOGICAL STUDIES IN THE PROJECT APE

Location	Reference	Results
Included project APE.	Chartkoff (1967)	No cultural materials observed in the APE
Large survey throughout Goleta. Included the current APE.	Wilcoxon, Erlandson, and Stone (1982)	No cultural materials observed in the APE
Portions of the APE south of Hollister Ave. along San Jose Creek.	SAIC (2009)	Observed non-cultural marine shell along the banks of San Jose Creek south of Hollister Ave. No cultural materials observed in the APE.
Included most of the project APE.	URS (2009)	No cultural materials observed in the APE
Portions of the APE north of Hollister Ave. along San Jose Creek.	Maki (2012)	No cultural materials observed in the APE but note noted poor overall visibility.

No known archaeological sites exist within the current APE. One archaeological site is listed within 0.5 miles of the project area: CA-SBA-2204H. CA-SBA-2204H is a historic site associated with the Sexton House, a Santa Barbara County Landmark located approximately 0.3 miles from the APE at 5494 Hollister Avenue. Located east of State Route 217, this site and landmark will not be impacted by the proposed project.

4.2 STUDIES WITHIN THE AREA OF POTENTIAL EFFECTS

Chartkoff's (1967) survey of 14 stream channels in Santa Barbara County included the project APE. No cultural materials were observed in the current APE.

Larry Wilcoxon, Jon Erlandson, and David Stone conducted a large-scale survey of the Goleta Valley for the U.S. Army Corps of Engineers that included the entire APE (1982). Visibility was considered excellent to poor but overall survey accuracy was deemed good to fair. No cultural materials were observed in the current APE.

More recent studies within the Hollister Avenue Bridge Replacement Project APE have been conducted in compliance with Section 106 of the National Historic Preservation Act (NHPA). These include cultural resource studies prepared in support of two City of Goleta projects: the San Jose Creek Capacity Improvement and Fish Passage Project and the Ekwill Street and Fowler Road Extensions Project. Finally, a recent archaeological survey was conducted in support of a CEQA analysis of the City of Goleta's proposed trail from Armitos Park to Kellogg Trail. Collectively, these previous studies have surveyed most of the bridge replacement project APE with negative results. These previous studies are described further below.

San Jose Creek Capacity Improvement and Fish Passage Project Cultural Resource Studies and Section 106 Compliance. SAIC (2009) performed a Phase I survey for this project, including the entire Hollister Avenue Bridge Replacement APE south of Hollister Avenue and assessed the area north of Hollister Avenue that could not be fully surveyed due to dense vegetation. SAIC observed fractured marine shell on both the east and west banks of San Jose Creek south of the Hollister Bridge. They concluded this shell was from secondary deposits associated with the construction of the San Jose Creek channel. SAIC noted that overall visibility was excellent and that the survey was reliable. No cultural materials were observed in the current APE.

The US Army Corps of Engineers Los Angeles District (Corps) had federal permit authority over the project and initiated Section 106 consultation with the California Historic Preservation Office (SHPO) on February 10, 2009. The Corps provided the SHPO with SAIC's 2009 archaeological survey report as well as results of consultation with the California Native American Heritage Commission (NAHC) and a letter received from the Santa Ynez Band of Mission Indians, Tribal Elders Council.

On March 5, 2009 the SHPO concurred with the Corps' finding of No Historic Properties Affected (see Appendix D).

Ekwill Street and Fowler Road Extensions Project Cultural Resource Studies and Section 106 Compliance. URS (2009) prepared a Phase I Archaeological Survey Report (ASR) and accompanying Historic Property Survey Report (HPSR) in support of NEPA and

CEQA review of the Ekwill Street and Fowler Road Extension Project. The Ekwill-Fowler APE included virtually the entire bridge replacement APE north of Hollister Avenue. URS noted a high degree of disturbance and good visibility. No cultural materials were observed in the current APE.

The California Department of transportation (Caltrans), representing the Federal Highways Administration as lead federal agency, submitted a letter to the SHPO on November 23, 2009 requesting SHPO concurrence with the finding that the Ekwill-Fowler project would result in No Historic Properties Affected. The SHPO concurred with this finding in a letter date April 19, 2010.

Armitos Park to Kellogg Park Creek Trail Project Cultural Resources Study. Maki (2012) conducted a Phase I survey for the Armitos Park to Kellogg Park Creek Trail, which encompassed virtually all areas of the current APE north of Hollister Avenue and west of the creek. Maki noted very poor visibility throughout most of the project area. No cultural materials were observed in the current APE, but due to poor visibility, Maki recommend archaeological monitoring during any grading activities.

4.3 SUMMARY OF NATIVE AMERICAN CONSULTATION

In October 2013, URS contacted the Native American Heritage Commission (NAHC) requesting a search of the sacred land files for the study area and an updated listing of individuals and organizations to be contacted. A reply containing the names and addresses of local Native American contacts was initially received on October 16, and an updated version on November 4, 2013 (Appendix B). The November sacred lands file search indicated no Native American cultural resources are known to be present in the project area.

Based upon the list provided by the NAHC, letters to Native American contacts were sent by certified mail on October 18, 2013. The described the project and requested information regarding concerns over potential impacts to cultural resources (see Appendix B for letters). On October 25, 2013, URS called all Native American contacts with valid phone numbers on file with the NAHC, with voice mails left if no one answered. No one contacted expressed concerns over the project, with the exception that if prehistoric cultural resources are unexpectedly discovered during construction activities, the Native American community should consulted.

SECTION 5.0
BACKGROUND

5.1 ENVIRONMENT

The proposed Hollister Avenue Bridge project APE will traverse both developed and undeveloped properties. The area south of Hollister Avenue consists mostly of highly disturbed commercial areas contain a channelized creek bed and paved lots. The area north of Hollister Avenue contains the original remnants of San Jose Creek in a southern willow riparian environment. A few Coast live oak trees (Quercus agrifolia) are mixed in with this habitat. Non-native grassland is dominant along the creek bottom and is the dominant understory along the banks

From the end of the Pleistocene through the middle Holocene (12,000–7,000 years ago), paleoenvironmental changes had a considerable influence on the resource potential of coastal habitats. The nearby Goleta Slough was created by a series of natural changes, beginning with the late Pleistocene sea level drop. Erosion of the creek's alluvial sediments created a deeply cut watershed feeding directly into the ocean. At the end of the Pleistocene, sea level rose quite quickly, flooding the streams that fed the Goleta Valley watershed. Between 7,000 and 5,000 years ago, the Goleta Slough reached its maximum size as the rate of sea-level rise stabilized; infilling from both marine and terrestrial sediments began thereafter. After about 5,000 years ago, silts and clays accumulated within the main body and margins of the lagoon. Heavy over-grazing by cattle coupled with wide-ranging grassfires and heavy winter storms in the 1860s resulted in heavy erosion of surrounding lands that filled in a large portion of the slough. Continual alluvial deposits from the Goleta Valley changed the slough from an intertidal flat to a salt marsh. Modern development further exacerbated this condition, and now frequent dredging is required to allow the influx of salt water (UCSB 2008).

5.2 SUMMARY OF PREVIOUS DISTURBANCES WITHIN THE AREA OF POTENTIAL EFFECTS

The project APE lies near the shore of the prehistoric Goleta Slough. The slough had been host to an abundant variety of plant and animal life, a feature that attracted prehistoric peoples. Over the centuries, the slough has silted in from sediments carried by the creeks that emptied into it and by construction of the airport and other modern developments.

Much of the slough was silted in during the 1860s. Cattle ranching had resulted in denuded land to the north of the study area, which, in turn, resulted in heavy soil erosion during a period of heavy rain in the 1860s. This newly filled land became host to both agricultural activities and residential construction (Tompkins 1966).

In the 1940s, the U.S. Marine Corps built a base in this location, requiring that the majority of the remaining slough be filled. The creeks were channelized to feed the remains of the slough to the south and west of the study area, and subsequent construction in the region has resulted in further redirection and modification of these creek channels.

Since the 1940s, the need for land for both residential and commercial development has resulted in further construction and general ground disturbance in the former Goleta Slough. Grading and excavating for construction of buildings and roads has resulted in further ground disturbance. The dredging of creek channels has resulted in material from the lower levels, what had once been the slough floor, being brought to the surface and redistributed. Thus, the current project APE lies on soils that has been filled, excavated, graded, and otherwise modified throughout the last century. The existing Hollister Avenue Bridge was first constructed in 1964 and widened in 1981.

5.3 ETHNOGRAPHY

The ethnohistoric Chumash are typically characterized as a linguistically related series of simple chiefdom societies occupying sedentary or semi-sedentary villages. Most Chumash communities fell at the collector end of Binford's (1980) Collector/Forager continuum, living in sedentary or semi-sedentary villages most of the year and moving to seasonal camps to collect foods for storage at the village.

The people of the study area had developed a maritime adaptation that was quite complex and efficient. Fishing within the channel waters efficiently provided a tremendous amount of meat (Glassow and Wilcoxon 1988), and was conducted with the *Tomol,* a plank canoe. Shellfish were collected both in estuarine environments, such as the Goleta Slough, and along the sandy beaches, intertidal zones, and rocky outcrops on the ocean shore. In addition to marine foods, the prehistoric diet included terrestrial plants (most notably acorns and some hard seeds) and terrestrial game (primarily rabbits and deer).

The villages that surrounded the Goleta Slough were amongst the largest villages in the Santa Barbara Channel area (Johnson 1988). Johnson has argued that some coastal villages, including *Helo'* (SBA-46) on Mescalitin Island in the Goleta Slough, were able to use their central location both to control exchange between the interior and the islands, and to redistribute trade goods (primarily beads) from the islands to the surrounding villages, thus generating economic and political power for themselves.

Ethnohistoric sources indicate that some form of hierarchical organization was in place (Geiger and Meighan 1976, Johnson 1988). However, the role of the chief, or *wot*, within the village, and perhaps between villages, is much debated. Though it is usually agreed that the *wot* held some level of administrative power within the village, some researchers have

downplayed the role to little more than a "big man" (Lloyd 1955), while others have argued that the *wot* held significant power and influence within multiple villages (L. King 1982).

The Chumash of the Goleta Slough area were recruited into Missions beginning in 1786. After the secularization of the missions in 1834, some of the former neophytes (mission Indians) returned to the Goleta Slough in order to establish new residential sites. Among these was a village across the slough from Mescalitan Island. Residents of this historic village would visit the abandoned remains of the village of *Helo'* to conduct ritual activities and to make shell beads (Johnson 1989).

5.4 PREHISTORY

Prehistoric archaeological sites dating from the Early Period (ca. 8,000–6,000 years BP) to as late as the 19th century have been discovered within Goleta. Given the distribution of early human remains and archaeological sites throughout California and on the Channel Islands, people were probably present in the Goleta area as far back as 13,000 years ago, though many remains of early activity have probably been lost to encroaching development and a rising ocean.

Generally, the prehistory of the Santa Barbara channel area can be divided into four broad periods. These periods are discussed below.

5.4.1 The Paleoindian Period (Prior to ca. 8,000 BP)

The "Central Coast" of California, inclusive of Santa Barbara and San Luis Obispo Counties, as well as the northern Channel Islands, has been occupied since the Late Pleistocene, and perhaps as early as 15,000 to 11,000 years ago (Erlandson *et al.* 2007, Fagan 2003, Mills *et al.* 2005, Moratto 1984). Like Paleoindian sites throughout California, indeed throughout North America, these early sites indicate short-term encampments, animal kill sites, and a generally ephemeral human presence in the area. Though some locations throughout California may have supported enough plant and animal life to allow for sedentary lifestyles, most of the early Californians were probably nomadic and highly mobile (Moratto 1984). Common artifacts from this time period are primarily either related to hunting (projectile points, "crescentic" bifaces), or else rather ambiguous in their purpose. In addition to the traditional view of Paleoindians as hunters, it has become a more widely accepted theory that the earliest Native Americans arrived to the central coast following the "Kelp Highway" southward and were highly adapted to maritime subsistence (Erlandson 1994): "By about 10,000 years ago, California's Paleo-Coastal peoples were travelling in seaworthy boats, using fishhooks and other fishing tackle, hunting marine mammals and sea birds, weaving cordage and basketry from sea grass, and making shell beads for ornamental use and exchange with interior people" (Erlandson *et al.* 2007: 62).

5.4.2 The Early Period (ca. 8,000 BP to 3,400 BP)

The onset of the Early Period corresponds with what is often called the Millingstone Horizon throughout California. The use of groundstone, manos, and matates indicates an increasing reliance on hard seeds and other such vegetal foods that required grinding in order to be made edible. Also it is generally thought that at this time populations shifted from a "forager" to a "collector" adaptation, using Binford's (1980) definitions (Grenda and Altschul 2002, Jones 1991). This shift is characterized by a greater dependence on stationary residential camps accompanied by shorter term occupation of smaller hunting and gathering locations in order to bring resources back to the base camp. On the Santa Barbara Channel coast, fishing became increasingly important during the Early Period (C. King 1990).

5.4.3 The Middle Period (3,400 BP to 800 BP)

The appearance of mortars and pestles during the terminal Early Period signals the beginnings of acorn exploitation. Along the coast, marine resources became increasingly important (Glassow 1996). The population of the study area appears to have grown and become increasingly sedentary with the large coastal sites becoming important residential places during a larger portion of the year, especially around the biologically productive estuaries (Glassow 1996, C. King 1990). It is possible that this increasingly sedentary lifestyle was accompanied by greater social distinction, and possibly stratification (C. King 1990).

5.4.4 The Late Period (800 BP to ca. 200 BP)

During the Late Period, populations continued to grow, sedentism further increased, and social complexity was present in the form of a hierarchical social organization. The chiefdom form of political organization was present during the Late Period, as was a market economy (as can be identified from callus cup "money beads" and the presence of large amounts of exchange goods at many sites) (Arnold 1983, C. King 1976).

Fishing, shellfish gathering, acorn processing, and gathering of both terrestrial and marine plant foods continued to be the dominant subsistence activities during the Late Period. Examination of middens and cemeteries as well as evaluation of ethnohistoric records indicates that exchange across ecological zones was a vitally important aspect of both social life and organization during the Late Period (Armstrong 2005, 2006; Horne 1981; Johnson 1988; C. King 1976, 1990; L. King 1982; Macko 1983; McRae 1999).

5.5 HISTORY

5.5.1 Early Contact

The first recorded European contact with the Santa Barbara area was in 1542 when Cabrillo sailed through the Santa Barbara Channel and made contact with natives near what is now Goleta. Although subsequent explorers sailed the California Coast, contact remained infrequent until the latter half of the 18th century. This changed in 1769 when the Portola expedition passed through California up to the San Francisco Bay, looking for suitable mission sites and providing Spanish names for the places visited. This expedition paved the way for the missionaries, soldiers, and other Spanish and Mexican settlers who would come in the following decades (Johnson 1988).

5.5.2 Mission Period

The beginning of California's Mission period is often placed with the founding of the mission at San Diego in 1769. However, the first local Spanish outpost, the Presidio at Santa Barbara, was founded in 1782, Mission Santa Barbara in 1786, and the missions at La Purisima and Santa Ynez were subsequently founded in 1787 and 1804, respectively. Initial conversion was typically voluntary, but as local populations began to shrink due both to death and fugitivism, military force was increasingly used both to retrieve fugitives and to bring new, and often unwilling, converts to the missions (Cook 1976).

When Mexico declared independence from Spain in 1810, the normal supply lines for the missions were disrupted until after Mexico secured its independence in 1822. The beginning of the end for the missions came in 1834, when the Mexican government ordered secularization of the California missions. Secularization was a lengthy and complex process, but in the end most of the former neophytes eventually became part of the workforce of the Mexican Ranchos.

5.5.3 Rancho Period

Although a large portion of the mission lands were supposed to have been granted to the former neophytes, the Mexican authorities soon found that the granting of mission lands was both a good way to raise money and to reward friends and allies. Many former soldiers obtained land grants upon leaving military service, and many ranches ended up in the hands of American settlers (Avina 1932).

The ranchos were the economic powerhouses of Mexican California, providing food, shelter, and employment for many residents of the state, as well as tallow, hides, and beef for trade and export (Smith 1958, 1964; Tompkins 1966). The majority of the ranchos raised just enough vegetable foods to supply their residents, and produced only livestock products for trade, however there were some ranchos given over primarily to the growing of crops (Avina

1932). Locally, the two prominent Ranchos were Rancho De Los Dos Pueblos to the west of the study area, and Rancho La Goleta, the boundaries of which contain the current location of Old Town Goleta. La Goleta had been granted to Daniel Hill, an American Settler, in 1846 (Tompkins 1966).

5.5.4 Americanization and Urbanization

Between 1846 and 1848, the Mexican-American war was fought, ending with an agreement that ceded California, Texas, Arizona, Utah, and New Mexico to the United States. This was followed shortly thereafter by the Gold Rush (beginning in 1849) and California being admitted as a state (1850).

The Santa Barbara area's economy remained primarily agricultural, with an emphasis on cattle ranching until a series of droughts in the 1860s led to the decimation of the cattle trade. Following this, Daniel Hill's family, who owned most of the land in modern Old Town Goleta, subdivided their property and sold it off to American farmers who began using it to grow crops. Hog and poultry farms, however, remained active in south Goleta near the current location of the airport. A similar process occurred in the surrounding ranchos, leading to the eventual subdividing of the region into both agricultural and urban plots (Tompkins 1966). Walnuts, lima beans, and lemons became the primary crops of the Goleta area.

At the same time, the small towns of La Goleta (in what is now eastern Goleta) and La Patera (in what is now Old Town Goleta) began to take root and grow, though neither became particularly large until the mid-20th century. The town of La Patera became the more important of the two communities in the 1920s and 1930s due to the construction of the Goleta Union School, the discovery of oil in the Ellwood area, the construction and subsequent expansion of an airfield, and the movement of the Post Office from La Goleta to La Patera, thus changing La Patera's name to Goleta (Tompkins 1966, Coombs 1991).

5.5.5 World War II and Beyond

During World War II, a Marine Corps Air Station (nicknamed "the Swamp") was constructed at what are now the Santa Barbara Airport and the UCSB campus. The construction of the Marine base included the destruction of much of Mescalitan Island and the village of *Helo'* in order to generate soil to fill the Goleta Slough and build the airfield.

The Marine base bolstered the local economy and led to some urban growth. However, the community remained relatively small until the construction of US 101 in 1947 provided easy access to the rest of the state and the construction of the Cachuma Dam in 1950 provided a steady supply of water to the town. Since then, Goleta has grown at a rapid and steady rate (SAIC 1996).

In 1954, the UCSB campus was moved from Santa Barbara to the site of the WWII Marine base. The neighboring town of Isla Vista subsequently grew as it became home to many of the campus's students (Lodise 2006).

Ward Memorial Boulevard (later named State Route 217) was originally proposed in 1955 at the location of what is currently State Route 217 in order to provide access to the university campus from US 101. The initial route was constructed in 1963. Further construction was performed in 1970 to complete the connection between State Route 217 and US 101.

SECTION 6.0
FIELD METHODS

On August 29, 2013, archaeologist Dr. Brent Leftwich conducted an intensive ground survey of the project area. Due to the heavily disturbed and developed nature of the APE, intuitive inspection of exposed soils and structures was heavily utilized, as appropriate. The areas directly beneath and south of the Hollister Avenue Bridge, along the bed and banks of San Jose Creek, have mostly been heavily disturbed with the channelization of San Jose Creek and the development of commercial lots. The only areas of exposed soil exist in small patches used for landscaping just south of Hollister Avenue along the creek banks. SAIC (2009) previously determined that this soil is the result of secondary deposition. Moreover, on March 5, 2009, the SHPO concurred with the Corps' finding that construction impacts in the project area south of Hollister Avenue would result in No Historic Properties Affected (see Appendix D).

The portion of the APE north of Hollister Avenue is undeveloped and contains dense vegetation in a riparian environment. It is unclear how much of this area has been disturbed previously by bridge construction. Despite the vegetation, ground visibility was good (approximately 70%). In portions of the northwestern APE, where duff obscured the ground surface, three 0.5 by 0.5-meter shovel scrapes were utilized in order to improve ground visibility. No cultural resources were noted during the current survey; all previous surveys have yielded the same negative results.

In November 2014 the APE was expanded north to include approximately one additional acre of land that may be used to mitigate potential biological impacts of the bridge replacement project. Most of this area is located on the east side of the creek essentially in the backyards of nearby residences. Field survey of this area was conducted by Craig Woodman on November 10, 2014. Much of the potential mitigation area is heavily overgrown to the point of being impassable and areas adjacent to the residences exhibit evidence of grading and other man-made disturbances. Survey methods were consistent with those of previous studies and focused on the close inspection of cleared areas, rodent burrows and other areas providing ground surface visibility.

SECTION 7.0
STUDY FINDINGS AND CONCLUSIONS

No evidence of prehistoric or historic resources was found in the APE. Due to the disturbed nature of the area south of Hollister Avenue, the potentially disturbed area north of Hollister Avenue, overall good visibility, and results of previous archaeological surveys and Section 106 consultations, the Hollister Avenue Bridge Replacement Project is unlikely to contain previously undocumented cultural resources. A finding of No Historic Properties Affected is recommended.

SECTION 8.0
OTHER RESOURCES

No archaeological sites or historic resources are located within the project APE.

8.1 UNIDENTIFIED CULTURAL MATERIALS

If previously unidentified cultural materials are unearthed during construction, it is Caltrans's policy that work be halted in that area until a qualified archaeologist can assess the significance of the find. Additional archaeological survey will be needed if project limits are extended beyond the present survey limits.

If the material is found to be significant, further investigation would be required in accordance with the January 1, 2004 *Programmatic Agreement among the Federal Highway Administration, the Advisory Council on Historic Preservation, the California State Historic Preservation Officer, and the California Department of Transportation Regarding Compliance with Section 106 of the National Historic Preservation Act, As it Pertains to the Administration of the Federal-Aid Highway Program in California* (Section 106 PA).

If human remains are discovered, State Health and Safety Code Section 7050.5 states that disturbances and activities shall cease in and nearby any area suspected to overlie remains and the County Coroner contacted. Pursuant to Public Resources Code Section 5097.98, if the remains are thought to be Native American, then the coroner will notify the Native American Heritage Commission, who will then notify the Most Likely Descendent. At this time, the City of Goleta will work with the Most Likely Descendent on the respectful treatment and disposition of the remains. Further provisions of Public Resources Code 5097.98 are to be followed as applicable.

SECTION 9.0
REFERENCES CITED

Armstrong, M. 2006. Archaeology and Ethnohistory in the Santa Ynez Valley. Paper presented at the Society for California Archaeology 40th annual meeting, Ventura.

2005. Exchange and Imports in the Late Period Santa Ynez Valley: The View from SBA-809. Paper presented at the Society for California Archaeology 39th annual meeting, Sacramento.

Arnold, J. 1983. *Chumash Economic Specialization: An Analysis of the Quarries and Bladelet Production Villages of the Channel Islands, California*. Ph.D. Dissertation, University of California, Santa Barbara.

Avina, R.H. 1932. *Spanish and Mexican Land Grants in California*. MA Thesis, University of California.

Binford, L. 1980. Willow Smoke and Dogs' Tales: Hunter-Gatherer Settlement Systems and Archaeological Site Formation. *American Antiquity* 28(1): 4–20.

Carbone, L. 2001. *Archaeological Monitoring During Grading Operations for Construction of a Railroad Siding, Ellwood Area, Goleta, County of Santa Barbara, California*. Prepared for Union Pacific Railroad Company.

Chartkoff, J. 1967. *Archaeological Resources on Fourteen Stream Channels in Coastal Santa Barbara County, California*. Prepared for the National Park Service, Western Region. Archaeological Survey, University of California, Los Angeles.

City of Goleta 2006. *Final Goleta General Plan/Coastal Land Use Plan Environmental Impact Report.* September 2006. Prepared by City of Goleta, Planning and Environmental Services Department.

Cook, S.F. 1976. *The Conflict Between the California Indian and White Civilization*. Berkeley: The University of California Press.

Coombs, G. 1991. *Those Were the Days: Landmarks of Old Goleta*. Goleta, California: Institute for American Research.

Erlandson, J. 1994. *Early Hunter-Gatherers of the California Coast*. Plenum Press, New York.

Erlandson, J., T. Rick, T. Jones, and J. Porcasi. 2007. One If by Land, Two If by Sea: Who Were the First Californians? In *California Prehistory: Colonization, Culture, and Complexity*. Ed T. Jones and K. Klar, Altamira Press, Lanham, MD.

Fagan, B. 2003. *Before California*. New York: Rowman & Littlefield Publishers.

Geiger, M. and C. Meighan. 1976. *As the Padres Saw Them: Californian Indian Life and Customs as Reported by the Franciscan Missionaries 1813–1815*. Santa Barbara Mission Archive Library.

Gerstle, A. and J. Serena. 1982. *Archaeological Investigation at SBA-56*. Ms on file at the Archaeological Information Center, UC Santa Barbara.

Glassow, M. 1996. *Purisimeño Chumash Prehistory*. Harcourt Brace College Publishers.

Glassow, M. and L. Wilcoxon. 1988. Coastal Adaptation Near Point Conception, California, With Particular Regard to Shellfish Exploitation. *American Antiquity* 53: 36–51.

Grenda, D. and J. Altschul. 2002. A Moveable Feast: Isolation and Mobility Among Southern California Hunter-Gatherers. In *Islanders & Mainlanders, Prehistoric Context for the Southern California Bight*. Tuscon: SRI Press.

Horne, S. 1981. *The Inland Chumash: Ethnography, Ethnohistory, and Archaeology*. Ph.D. Dissertation, University of California, Santa Barbara.

Johnson, J. 1989. History of the Village of Helo' on Mescalitan Island. *Goleta Historical Notes* 4(2): 2–12.

1988. *Chumash Social Organization: An Ethnohistoric Perspective*. Ph.D. Dissertation, University of California, Santa Barbara.

Jones, T. 1991. Marine-Resource Value and Priority of Coastal Settlement: A California Perspective. *American Antiquity* 56: 419–443.

King, C. 1990. *The Evolution of Chumash Society*. New York: Garland Publishing.

1976. Chumash Inter-Village Economic Exchange. In *Native Californians, A Theoretical Retrospective*, edited by L. Bean and T. Blackburn. Menlo Park: Ballena Press.

King, L. 1982. *Medea Creek Cemetery: Late Inland Chumash Patterns of Social Organization, Exchange and Warfare*. Ph.D. Dissertation, University of California, Los Angeles.

Lloyd, N. 1955. *The Chumash: A Study of the Assimilation of a California Indian Tribe*. MA thesis, University of Arizona.

Lodise, C. 2006. Isla Vista History. Available online as of May 30, 2006 at http://www .islavistahistory.com.

Macko, M. 1983. Beads, Bones, Baptisms, and Sweatlodges, Analysis of Collections from "Elijman" (CA-SBA-485), a Late Period Ynezeno Chumash Village in the Central Santa Ynez Valley, California. MA Thesis, University of California, Santa Barbara.

Maki, M. 2012. *Phase I Archaeological Investigation of Approximately 0.6-Acres for the Armitos Park to Kellogg Park Creek Trail, Project #9007, Goleta, Santa Barbara County, California.* Prepared for the City of Goleta.

McRae, K. S. 1999. *Soxtonukmu' (CA-SBA-167): An Analysis of Artifacts and Economic Patterns from a Late Perios Chumash Village in the Santa Ynez Valley*. MA Thesis, University of Texas, San Antonio.

Mills, W., M. Rondeau, T. Jones. 2005. A Fluted Point from Nipomo, San Luis Obispo County, California. *Journal of California and Great Basin Anthropology* 25(2): 68–74.

Moratto, M. 1984. *California Archaeology*. Academic Press.

Myrick, D. F. 1987. Santa Barbara County Railroads: A Centennial History. *Noticias* 33 (2 & 3): 23–71.

Rogers, D.B. 1929. *Prehistoric Man of the Santa Barbara Coast*. Santa Barbara Museum of Natural History, Santa Barbara, California.

Science Applications International Corporation (SAIC). 2009. *An Archaeological Inventory Survey: San Jose Creek Capacity Improvement Project in the City of Goleta, Santa Barbara County, California*. Prepared for the City of Goleta, CA.

1996. *Historic Resources of the Goleta Old Town.* Prepared for Santa Barbara County Planning and Development. Prepared by Science Applications International Corporation, Santa Barbara.

Smith, W. 1964. Ventura County's Russian Bell. *The Ventura County Historical Society Quarterly* 9(3): 15–21.

1958. The Camulos Story. *The Ventura County Historical Society Quarterly* 3(2): 1–11.

Tompkins, W.A. 1966. *Goleta, the Good Land*. Goleta, California: Goleta Amvets Post No. 55 and the Santa Barbara News-Press.

University of California at Santa Barbara (UCSB). 2008. *University of California at Santa Barbara LRDP EIR.*

URS. 2009. *Supplemental Archaeological Survey Report for the Ekwill Street and Fowler Road Extension Project, City of Goleta, County of Santa Barbara, California.* Prepared for the City of Goleta and the California Department of Transportation.

Wilcoxon, L., J. Erlandson, and D. Stone. 1982. *Final Report – Intensive Cultural Resources Survey for the Goleta Flood Protection Program, Santa Barbara County, California*. Prepared for the U.S. Army Corps of Engineers, Los Angeles District.

APPENDIX A
FIGURES

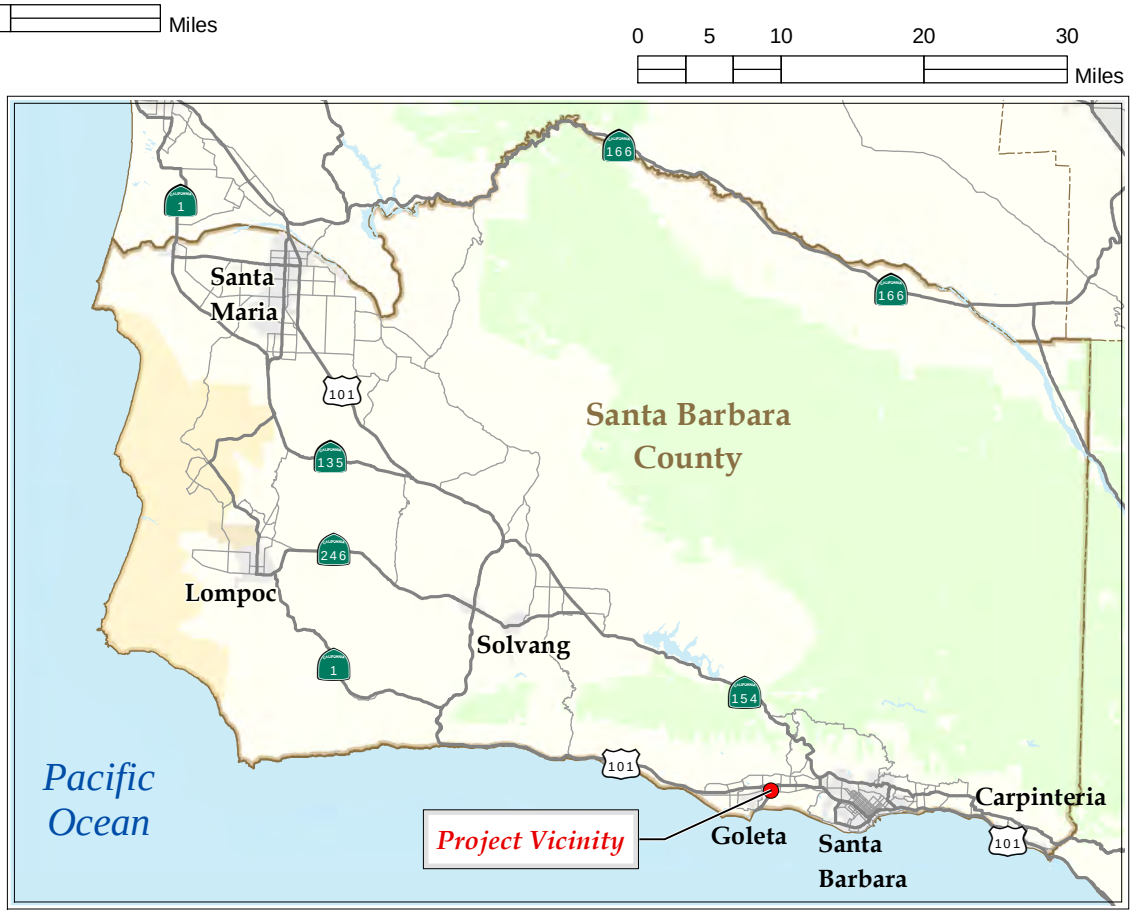

Hollister Avenue Bridge Replacement Project City of Goleta, CA 05-SB-0-GLTA BRLS-5481 (013)	**Source:** [1] The layer, below 1:3m, presents the 50 states, the District of Columbia, and Puerto Rico of the United States. It provides detailed boundaries that are consistent with the block group, tract, and county data sets and are	**Figure 1.** PROJECT VICINITY	2013
URS Corporation			

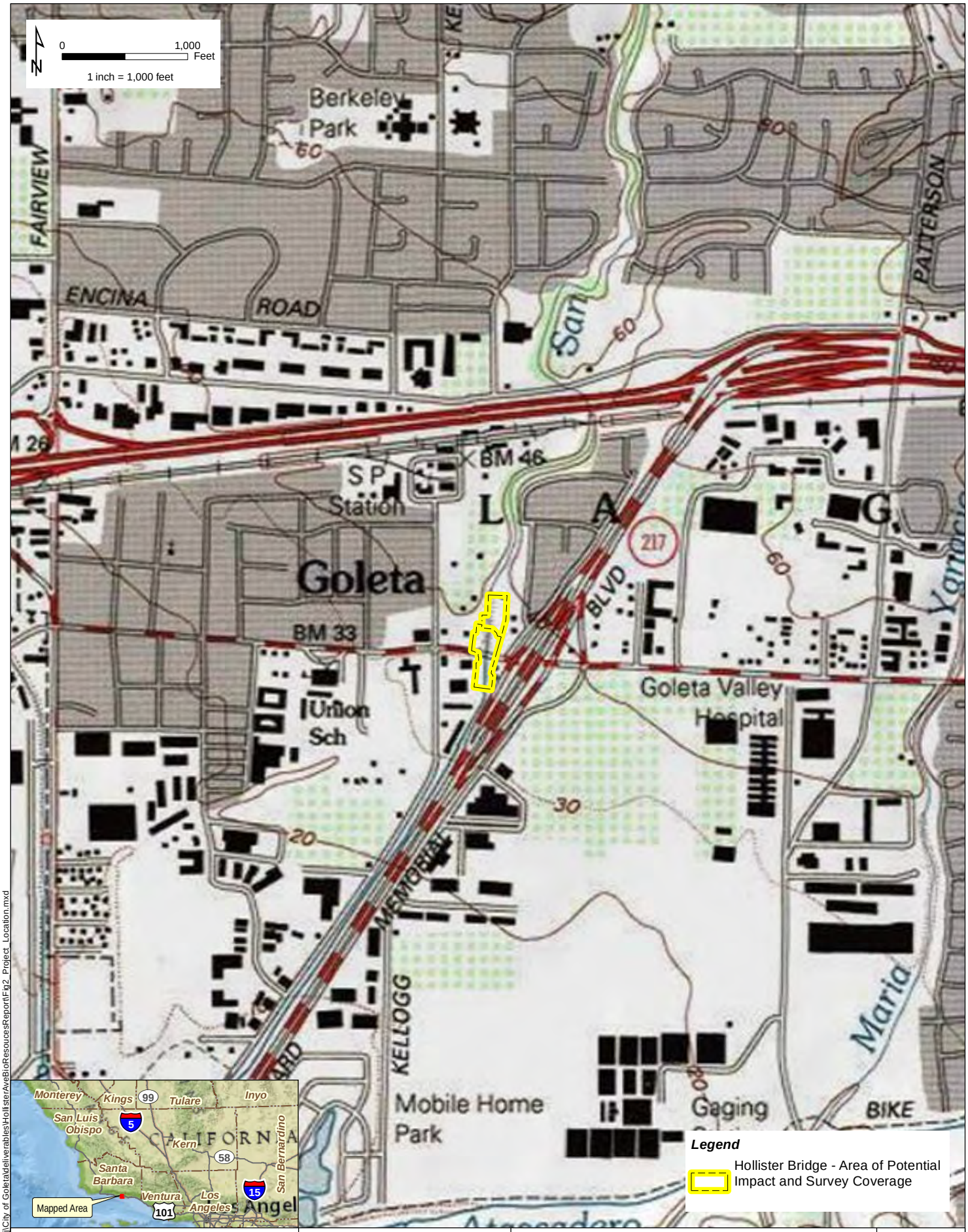

V:\Projects\GIS_Proj\City of Goleta\deliverables\HollisterAveBioResoucesReport\Fig2_Project_Location.mxd

Hollister Avenue
Bridge Replacement Project
City of Goleta, CA
05-SB-0-GLTA BRLS-5481 (013)

URS Corporation

Source: [1] Seamless, scanned images of United States Geological Survey (USGS) paper topographic 1:24,000 scale,Goleta Quad 1988, Copyright: 2013 National Geograpic Society, i-cubed.

Figure 2. PROJECT LOCATION AND SURVEY COVERAGE

2014

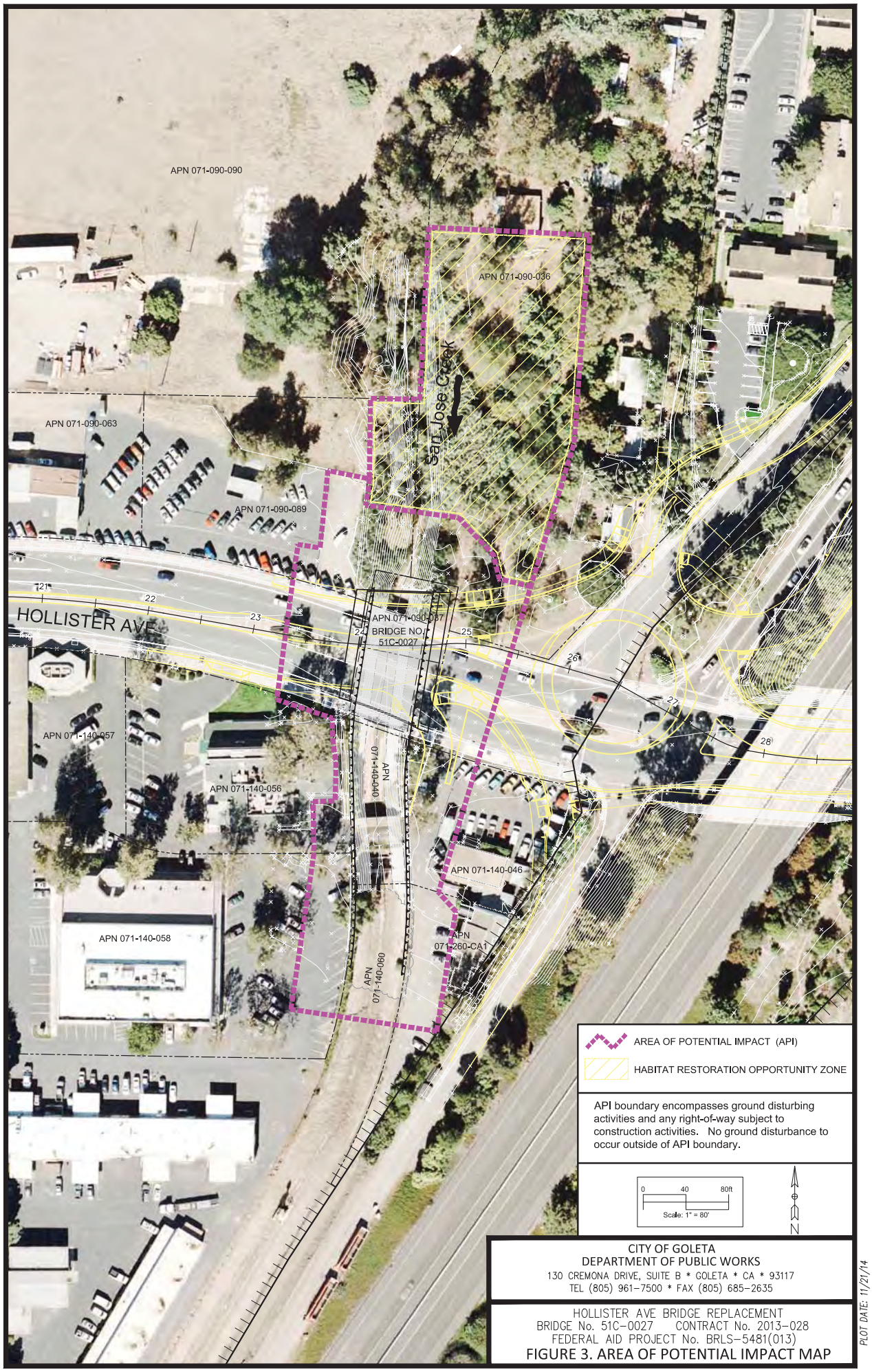

CITY OF GOLETA
DEPARTMENT OF PUBLIC WORKS
130 CREMONA DRIVE, SUITE B * GOLETA * CA * 93117
TEL (805) 961-7500 * FAX (805) 685-2635

HOLLISTER AVE BRIDGE REPLACEMENT
BRIDGE No. 51C-0027 CONTRACT No. 2013-028
FEDERAL AID PROJECT No. BRLS-5481(013)

FIGURE 3. AREA OF POTENTIAL IMPACT MAP

PLOT DATE: 11/21/14

APPENDIX B
NATIVE AMERICAN CONSULTATION

NATIVE AMERICAN HERITAGE COMMISSION
1550 Harbor Boulevard, Suite 100
West Sacramento, CA 95691
(916) 373-3715
Fax (916) 373-5471
Web Site www.nahc.ca.gov
ds_nahc@pacbell.net

November 4, 2013

Dr. Brent Leftwich, Ph.D., RPA
URS Corporation
130 Robin Hill Road
Santa Barbara, CA 93111

Sent by FAX to: 805-964-0259
No. of Pages: 5

RE: Request for Sacred Lands File Search and Native American Contacts list for the **"Hollister Avenue Bridge Replacement Project;"** located in City of Goleta; Santa Barbara County, California

Dear Dr. Leftwich:

A record search of the NAHC Sacred Lands File **failed to indicate** the presence of Native American traditional cultural places in the project site(s) submitted as defined by the USGS coordinates configuring the 'Area of Potential Effect' or APE. However, there are Native American cultural resources in close proximity to the APE. Other data sources for Native American sacred places/sites should also be contacted. A Native American tribe or individual may be the only sources of information about traditional cultural places or sites.

In the 1985 Appellate Court decision (170 Cal App 3rd 604), the Court held that the NAHC has jurisdiction and special expertise, as a state agency, over affected Native American resources impacted by proposed projects, including archaeological places of religious significance to Native Americans, and to Native American burial sites.

Attached is a list of Native American tribes, Native American individuals or organizations that may have knowledge of cultural resources in or near the project area (APE). As part of the consultation process the NAHC recommends that local government and project developers contact the tribal governments and individuals in order to determine the proposed action on any cultural places/sacred sites. If a response from those listed is not received in two weeks of notification, the NAHC requests that a follow-up telephone call be made to ensure the project information has been received

If you have any questions or need additional information, please contact me at (916) 373-3715.

Sincerely,

Dave Singleton
Program Analyst

Attachments

Native American Contacts
Santa Barbara County
November 4, 2013

Ernestine DeSoto, Tribal Elder
1311 Salinas Place # 5 Chumash
Santa Barbara CA 93103
805-636-3963

Patrick Tumamait
992 El Camino Corto Chumash
Ojai , CA 93023
(805) 640-0481
(805) 216-1253 Cell

Beverly Salazar Folkes
1931 Shadybrook Drive Chumash
Thousand Oaks, CA 91362 Tataviam
folkes9@msn.com Fernandeño
805 492-7255
(805) 558-1154 - cell
folkes9@msn.com

San Luis Obispo County Chumash Council
Chief Mark Steven Vigil
1030 Ritchie Road Chumash
Grover Beach CA 93433
(805) 481-2461
(805) 474-4729 - Fax

Santa Ynez Band of Mission Indians
Vincent Armenta, Chairperson
P.O. Box 517 Chumash
Santa Ynez , CA 93460
varmenta@santaynezchumash.
(805) 688-7997
(805) 686-9578 Fax

John Ruiz
1826 Stanwood Drive Chumash
Santa Barbara CA 93103
(805) 965-8983

Barbareno/Ventureno Band of Mission Indians
Julie Lynn Tumamait-Stennslie, Chair
365 North Poli Ave Chumash
Ojai , CA 93023
jtumamait@sbcglobal.net
(805) 646-6214

Gilbert M. Unzueta Jr.
571 Citation Way Chumash
Thousand Oaks, CA 91320
uhuffle@aol.com
(805) 375-7229

This list is current only as of the date of this document.

Distribution of this list does not relieve any person of the statutory responsibility as defined in Section 7050.5 of the Health and Safety Code, Section 5097.94 of the Public Resources Code and Section 5097.98 of the Public Resources Code.

his list s only applicable for contacting local Native Americans with regard to cultural resources for the proposed Hollister Avenue Bridge Replacement Project; located in the City of Goleta; Santa Barbara County, California for which a Sacred Lands File search and Native American Contacts list were requested.

Native American Contacts
Santa Barbara County
November 4, 2013

Owl Clan
Qun-tan Shup
48825 Sapaque Road
Bradley , CA 93426
mupaka@gmail.com
(805) 472-9536 phone/fax
(805) 835-2382 - CELL
Chumash

Coastal Band of the Chumash Nation
Michael Cordero, Chairperson
P.O. Box 4464
Santa Barbara CA 93140
CbcnTRIBALCHAIR@gmail.com
Chumash

Stephen William Miller
189 Cartagena
Camarillo , CA 93010
(805) 484-2439
Chumash

Charles S. Parra
P.O. Box 6612
Oxnard , CA 93031
(805) 340-3134 (Cell)
(805) 488-0481 (Home)
Chumash

Santa Ynez Tribal Elders Council
Adelina Alva-Padilla, Chair Woman
P.O. Box 365
Santa Ynez , CA 93460
elders@santaynezchumash.org
(805) 688-8446
(805) 693-1768 FAX
Chumash

Santa Ynez Band of Mission Indians
Tribal Admin/Counsel Sam Cohen
P.O. Box 517
Santa Ynez , CA 93460
info@santaynezchumash.org
(805) 688-7997
(805) 686-9578 Fax
Chumash

Randy Guzman - Folkes
4676 Walnut Avenue
Simi Valley , CA 93063
ndnRandy@yahoo.com
(805) 905-1675 - cell
(805) 520-5915-FAX
Chumash
Fernandeño
Tataviam
Shoshone Paiute
Yaqui

Carol A. Pulido
165 Mountainview Street
Oak View , CA 93022
805-649-2743 (Home)
Chumash

This list is current only as of the date of this document.

Distribution of this list does not relieve any person of the statutory responsibility as defined in Section 7050.5 of the Health and Safety Code, Section 5097.94 of the Public Resources Code and Section 5097.98 of the Public Resources Code.

his list s only applicable for contacting local Native Americans with regard to cultural resources for the proposed Hollister Avenue Bridge Replacement Project; located in the City of Goleta; Santa Barbara County, California for which a Sacred Lands File search and Native American Contacts list were requested.

Native American Contacts
Santa Barbara County
November 4, 2013

Melissa M. Parra-Hernandez
119 North Balsam Street Chumash
Oxnard , CA 93030
envyy36@yahoo.com
805-983-7964
(805) 248-8463 cell

Barbareno/Ventureno Band of Mission Indians
Raudel Joe Banuelos, Jr.
331 Mira Flores Court Chumash
Camarillo , CA 93012
805-987-5314

Frank Arredondo
PO Box 161 Chumash
Santa Barbara CA 93102
ksen_sku_mu@yahoo.com

Coastal Band of the Chumash Nation
Janet Darlene Garcia
P.O. Box 4464 Chumash
Santa Barbara CA 93140
805-689-9528

Santa Ynez Tribal Elders Council
Freddie Romero, Cultural Preservation Consint
P.O. Box 365 Chumash
Santa Ynez , CA 93460
805-688-7997, Ext 37
freddyromero1959@yahoo.com

Coastal Band of the Chumash Nation
Crystal Baker
P.O. Box 723 Chumash
Atascadero , CA 93423
805-466-8406

Barbareno/Ventureno Band of Mission Indians
Kathleen Pappo
2762 Vista Mesa Drive Chumash
Rancho Pales Verdes CA 90275
310-831-5295

Barbareño Chumash
Ms. Regina Unzueta
125 West Carrillo Street Chumash
Santa Barbara CA 93101
805 570-9530
reginaUnzueta@gmail.com

This list is current only as of the date of this document.

Distribution of this list does not relieve any person of the statutory responsibility as defined in Section 7050.5 of the Health and Safety Code, Section 5097.94 of the Public Resources Code and Section 5097.98 of the Public Resources Code.

his list s only applicable for contacting local Native Americans with regard to cultural resources for the proposed Hollister Avenue Bridge Replacement Project; located in the City of Goleta; Santa Barbara County, California for which a Sacred Lands File search and Native American Contacts list were requested.

Santa Barbara County

Native American Heritage Commission <nahc@pacbell.net>
To: Dave Singleton <ds_nahc@pacbell.net>
Fwd: Sacred Land Files: Questions Regarding Hollister Ave Bridge Replacement, Goleta, CA

October 31, 2013 2:34 PM

1 Attachment, 1.0 MB

Begin forwarded message:

From: Brent Leftwich <leftwich15@yahoo.com>
Subject: Sacred Land Files: Questions Regarding Hollister Ave Bridge Replacement, Goleta, CA
Date: October 25, 2013 1:27:08 PM PDT
To: NAHC <nahc@pacbell.net>
Reply-To: Brent Leftwich <leftwich15@yahoo.com>

Dear Native American Heritage Commission,

I submitted a request for a Sacred Land Files search and a list of Most Likely Decedents for the Hollister Ave Bridge Replacement project on Oct 15, 2013. A response was received on Oct 16, 2013. In this response, you stated that multiple Native American traditional cultural places were present within the project site. I am wondering if the Sacred Land Files could be rechecked or if further clarification could be given, as this was an unexpected response for the following reasons:

1) The project area is quite small, only 1/4 to 1/2 acre, and this seems too small to have multiple cultural properties.
2) The project area consists almost entirely of existing infrastructure such as the bridge, roadways, and concrete channelized creek bed. Very little if any native soil is present in this heavily disturbed environment.
3) According to the CHRIS record search, no recorded prehistoric cultural resources are located in or within 1/4 mile of the project area.
4) Several reports from the last 7 years covered in part or whole the project area and its vicinity. All of these reports, concerning projects much larger in scale, contain letters from the NAHC indicating the Sacred Land Files record search found no Native American traditional cultural properties in the area.
5) Individuals on the Native American Contacts list provided by the NAHC stated no concerns regarding the project when contacted.

For these reasons, I am requesting a recheck of the Sacred Land Files or further clarification regarding Native American concerns over the project. I have attached the original request information below, including a project map. I attempted to contact Mr. Dave Singleton but received a message he was out of town until Nov 4. CalTrans is looking to move forward with the project and I was hoping to have an answer before then. Please feel free to contact me via phone at 805-964-5529 if you wish.

Thank you very much for your patience and understanding,

Brent Leftwich, Ph.D., R.P.A.

No

Project: Hollister Ave Bridge Replacement
County: Santa Barbara
USGS Quadrangle
Name: Goleta Quad
Township 4N Range 28W Section(s): Unsectioned
Company/Firm/Agency:
URS Corporation, Santa Barbara
Contact Person: Brent Leftwich, Ph.D., R.P.A.
Street Address: 130 Robin Hill Rd
City: Santa Barbara Zip:93111
Phone: 805-964-5529
Fax: 805-964-0259

Email: leftwich15@yahoo.com
Project Description:
The Caltrans Office of Structure Maintenance has classified the existing four-lane Hollister Avenue Bridge (Bridge No. 51C-0027) over the San Jose Creek Channel as functionally obsolete. The existing bridge was constructed in 1964 and widened in 1981, and it consists of prestressed concrete voided slab units supported on concrete abutments and driven piles. It spans 104 feet wide and 45 feet long. The purpose of the project is to replace the existing Hollister Avenue Bridge with a new bridge that will convey 100-year flood flows and meet current design standards providing a safe crossing over San Jose Creek for vehicles and pedestrians.

- 1 Attachment
-

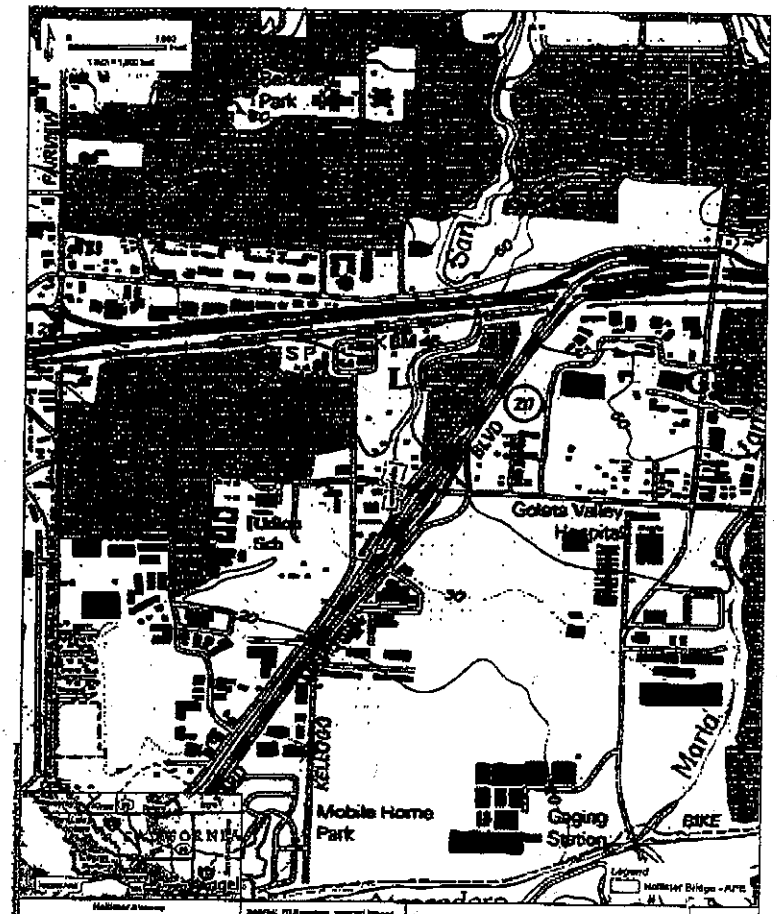

Hallstar Avenue Bridge Replacement Project City of Solana	Source: USGS Topographic Map of United States Geological Survey, Solana Beach, CA, 1:24,000 scale, Datum: NAD 1983, Coordinate Grid: National Geodetic Survey, Projection:	Figure 1. PROJECT LOCATION	2013
USUS Corporation			

APPENDIX C
CENTRAL COAST INFORMATION CENTER
RECORDS SEARCH DOCUMENTATION

CENTRAL COAST INFORMATION CENTER

California
Archaeological
Inventory

SAN LUIS OBISPO AND
SANTA BARBARA COUNTIES

Department of Anthropology
University of California, Santa Barbara
Santa Barbara, CA 93106-3210
(805) 893-2474
FAX (805) 893-8708

August 8, 2013

To Whom It May Concern:

On the above date, Brent Leftwich performed a record search on behalf of URS for the Hollister Bridge Replacement Project Number 28907448.02007.

If you have any questions about this project, please contact me.

Sincerely,

Allison Jaqua
Assistant Coordinator

APPENDIX D
SHPO CONCURRENCE LETTER FOR THE SAN JOSE CREEK CAPACITY IMPROVEMENT AND FISH PASSAGE PROJECT

SPL-2007-00495

STATE OF CALIFORNIA – THE RESOURCES AGENCY

ARNOLD SCHWARZENEGGER, *Governor*

OFFICE OF HISTORIC PRESERVATION
DEPARTMENT OF PARKS AND RECREATION
P.O. BOX 942896
SACRAMENTO, CA 94296-0001
(916) 653-6624 Fax: (916) 653-9824
calshpo@ohp.parks.ca.gov
www.ohp.parks.ca.gov

05 March, 2009

In Reply Refer To: COE090213A

Aaron O. Allen, Ph.D.
Chief, North Coast Branch
Regulatory Division
Department of the Army
Los Angeles District, Corps of Engineers
Ventura Field Office
2151 Alessandro Drive, Suite 110
Ventura, California 93001

RECEIVED
MAR 11 2009
Regulatory Branch

Re: City of Goleta San Jose Creek Channel Capacity Improvement Project, City of Goleta, Santa Barbara County, California (Regulatory Division Project No. SPL-2007-00495-TS).

Dear Mr. Allen:

Thank you for submitting to our office, your letter and supporting documentation regarding the undertaking noted above. The U.S. Army Corps of Engineers (COE), Los Angeles District, is seeking my comments on the effects that the subject undertaking will have on historic properties, pursuant to 36 CFR Part 800 (as amended 8-05-04) regulations implementing Section 106 of the National Historic Preservation Act (NHPA). The proposed project is designed to increase capacity in the San Jose Creek channel to reduce flooding in the City of Goleta. This will involve removing an existing 55-linear foot section of concrete channel lining and replacing it with lining of an improved design. An existing secondary steel bridge will also be removed and the channel depth will be increased by approximately three feet. In addition to your letter of February 10, 2009, you have submitted the following report in support of this undertaking:

- *An Archaeological Inventory Survey San Jose Creek Capacity Improvement Project In the City of Goleta, Santa Barbara County, California* (Trish Drennan, SAIC: January 2009).

After reviewing your letter and supporting documentation, I have no objection to your finding of No Historic Properties Affected. Be advised that under certain circumstances, such as unanticipated discovery or a change in project description, the COE may have additional future responsibilities for this undertaking under 36 CFR Part 800. Thank you for seeking my comments and for considering historic properties in planning your project. If you require further information, please contact William Soule, Associate State Archeologist, at phone 916-654-4614 or email wsoule@parks.ca.gov.

Sincerely,

Susan K Stratton for

Milford Wayne Donaldson, FAIA
State Historic Preservation Officer

APPENDIX E
GREENHOUSE GAS EMISSIONS TECHNICAL MEMORANDUM

URS

Memorandum

Date: December 2, 2013

To: Ms. Rosemarie Gaglione, PE, Assistant City Engineer
City of Goleta, Goleta, CA 93117

From: Mr. Matt Dunn, Principal Engineer, URS Corporation
130 Robin Hill Road, Suite 100, Santa Barbara, CA 93117

Subject: **Greenhouse Gas Emissions from the Proposed Hollister Bridge Replacement Project, City of Goleta, Santa Barbara County, California**

1.0 INTRODUCTION

The City of Goleta (Applicant) proposes to replace the existing 4-lane Hollister Avenue Bridge with a new 4-lane bridge. Replacement of the bridge will allow the bridge to meet current design standards. The bridge spans San Jose Creek and is adjacent to the Highway 217/Hollister Avenue Interchange. The project area is within the jurisdiction of the Santa Barbara County Air Pollution Control District (SBCAPCD). Construction is estimated to start in 2015 and would take approximately 24 months to complete. URS quantified greenhouse gas (GHG) emissions resulting from the construction of the Project using construction data provided by the Project Engineer. Emission factors and other data are from the CalEEMod California Emissions Estimator Model™ version 2013.2.2 (successor to planning level emissions estimating software, URBEMIS). This software was used as the GHG quantification tool for this project. The Project Engineer estimated the project construction activities would occur over a 24 month period.

2.0 METHODOLOGY AND ASSUMPTIONS FOR CONSTRUCTION

2.1 CONSTRUCTION SCHEDULE

The project's construction schedule assumes 10-hour work days and 6 work days per week for months 1-6 and 13-18, with 8 hour work days and 5 work days per week for months 7-12, and 19-24.

2.2 EMISSION FACTORS

Emission factors for off-site emissions from on-road travel (via public highways to the site access) were calculated in California Emissions Estimator Model™ (CalEEMod version 2013.2.2). This software program calculates on-road vehicle emissions based on emission factors from California specific highway emissions database, the latest version of the California EMission FACtor model (EMFAC2011). Emissions from personal vehicles for worker and vendor commuting, and trucks for material hauling are based on the number of trips and vehicle miles traveled (VMT) along with emission factors from EMFAC2011. The emissions from mobile sources were calculated by CalEEMod as follows:

$$Emissions_{pollutant} = VMT * EF_{running,pollutant}$$

Where:

$Emissions_{pollutant}$ = emissions (CO_2) from vehicle running for each pollutant
VMT = vehicle miles traveled
$EF_{running,pollutant}$ = emission factor for running emissions

The model was run with the calendar year 2015 selected as the start of construction and 2017 as the date of operation. The vehicle class selected for worker personal vehicles was CalEEMod default, a mix of the following categories: Light Duty Auto (LDA), Light duty truck 1 (LDT1), and Light duty Truck 2 (LDT2). The vehicle class for vendors was selected as CalEEMod default, a mix of Heavy Heavy Duty Diesel Truck (HHDT) and Medium Heavy Duty Trucks (MHDT). Construction material hauling was selected as CalEEMod default, HHDT, to represent off-site travel.

Emission factors for on-site diesel construction equipment were calculated in CalEEMod; the software program calculates the exhaust emissions based on California Air Resources Board (ARB) OFFROAD2011 methodology using the equation presented below.

$$Emission_{DieselEx} = \Sigma_i (EFi = x\ Pop_i\ x\ AvgHp_i\ x\ Load_i\ x\ Activity_i)$$

Where:

EF = Emission factor in grams per horsepower-hour (g/bhp-hr) as processed from OFFROAD2011

Pop = Population, or the number of pieces of equipment

$AvgHp$ = Maximum rated average horsepower

$Load$ = Load factor

$Activity$ = Hours of operation

i = equipment type

The software calculates the exhaust emission factors for each piece of equipment at each horsepower range by back calculating from total daily emissions reported in the model output files using the following formula:

$$Emission\ Factor \left[\frac{g}{hphr}\right] = \frac{Total\ Daily\ Exhaust}{Activity\ x\ AvgHP\ x\ LF\ x\ 907184.74}$$

Where:

$Total\ Daily\ Exhaust$ = Total pollutant emissions [tons/day]

Activity = Total daily statewide usage of equipment [hours/day]

AvgHP = Average HP of equipment within the horsepower range [HP]

LF = Load Factor of equipment [unitless]

907,184.74 = Conversion factor from tons to grams

Total Daily Exhaust and Activity were obtained from OFFROAD2011 model output, while Avg HP and LF were obtained from input files to the model.

The model is made to be region specific. Its emission quantification is based on estimated regional equipment population for a given year. Therefore, the model applied calendar years 2015- 2017 set in the South of Santa Ynez Range area of Santa Barbara County as the basis. The construction activity is assumed to start in May, 2015.

Carbon dioxide (CO_2), methane (CH_4) and nitrous oxide (N_2O) are the known by-products from fuel combustion that are classified as GHGs. For diesel internal combustion, almost all of the GHG is from CO_2. Emissions CH_4 and N_2O are multiplied by their Global Warming Potentials (GWP) to arrive at CO_2e. The GWPs applied were 21 for CH_4 and 310 for N_2O. (Typically, the emissions of CH_4 and N_2O are less than 1 percent of the total GHG for diesel internal combustion). The units of measure for GHG are metric tons per year of CO2e ($MTCO_2e/yr$). A metric ton is 100 kilograms or 2,204 pounds mass.

2.3 ON-SITE AND OFF-SITE CONSTRUCTION ACTIVITY

Calculations of GHG emissions due to on-site construction activity were based on information provided by the Project Engineer regarding the type and quantity of construction equipment anticipated to operate on-site each month. All construction equipment was assumed to be fueled on diesel. Table 1 details on-site construction equipment, including horsepower (HP). Engine load factors of equipment were preselected by default levels of CalEEMod; this information is based on historical data from CARB and SBCAPCD. There are no sewage derived biological CO_2 emissions or grid based power.

2.4 OFF-SITE TRAVEL DISTANCE

Travel distance assumed a distribution of passenger vehicles for workers commuting based on the CalEEMod default of 12.3 miles. It was assumed that passenger vehicles for the construction work force transported an average of one passenger. This is conservative considering some workers may

carpool. Emissions from passenger vehicles traveling to and from the site were based on estimated construction labor force per month as shown in Table 2.

Delivery truck trips for material hauling shown in Table 3 reflect the transport of construction materials within an average 50 mile radius.

3.0 OPERATIONS BASED EMISSIONS

The project will not induce growth, nor will the project generate new traffic. It will not cause any new significant long-term traffic emissions.

4.0 THRESHOLDS OF SIGNIFICANCE

The California Global Warming Solutions Act of 2006 (Assembly Bill 32, Health and Safety Code Section 38500 et. seq.) requires reduction of California's GHG emissions to 1990 levels by 2020. The California Air Resources Board has established this 1990 level at 427 million metric tons (MMT) of CO_2e emissions as an attainment goal. Pursuant to AB 32 and other related legislation, various actions have established plans and regulations that identify emission limits and reduction measures.

On December 30, 2009, the Secretary for Natural Resources adopted amendments to the State CEQA Guidelines that address greenhouse gas emissions. On February 16, 2010, the Office of Administrative Law filed the amendments with the Secretary of State. The amendments are effective as of March 18, 2010.

Establishment of thresholds at the state and/or local level has been a point of discussion and analysis by various agencies and boards (i.e., OPR, CARB, CAPCOA [California Air Pollution Control Officers Association]). Information has been presented on various scenarios including no thresholds, a zero threshold, and a non-zero threshold. Values for a non-zero threshold vary and include the factoring in of performance standards as well as a quantitative threshold in determining significance.

The CARB has been requested by the Governor's Office of Planning and Research to make recommendations for GHG-related thresholds of significance. Consistent with this request, the CARB released a *Preliminary Draft Staff Proposal* in October 2008 (*Draft Staff Proposal*), which represents the first step toward developing recommended statewide interim thresholds of significance for GHGs that may be adopted by local agencies for their own use. The *Draft Staff Proposal* focuses on common project types, including industrial, residential, and commercial projects. The collective greenhouse gas emissions from these sectors, together with the transportation sector, represent approximately 80% of the statewide greenhouse gas emissions inventory in 2004.

A significant effect on the environment means a substantial, or potentially substantial, change in the environment caused directly or indirectly by the project. The incremental effect of a project can be significant when it is cumulatively considerable; that is, when the effect is added to that of other past, present, and reasonably foreseeable probable future projects that also contribute to the problem (State CEQA Guidelines, 2009).

OPR indicates that a lead agency should make a good faith effort, based on available information, to describe, calculate, or estimate the amount of GHG emissions resulting from a project. While numerous threshold options have been discussed in various publications, at this time, neither the State of California, nor the Santa Barbara County APCD, nor the City of Goleta have established or adopted CEQA significance thresholds/screening tables for GHG emissions. The County of Santa Barbara Planning and Development Department does use 10,000 MT CO2e/year as a screening tool for projects to initiate review on a case by case basis.

5.0 RESULTS AND CONCLUSIONS

Project construction activities, especially those associated with heavy equipment operations for grading, would contribute to cumulative GHGs and global climate change. The use of heavy trucks, excavators, graders and smaller equipment, and the transportation of construction workers and materials during the work week to and from the site over 24 months would result in emissions of combustion related pollutants. It is anticipated that project construction generated CO2e emission levels over 24 months would total 3,230 metric tons. Assuming a project lifetime of 30 years, the amortized annual GHG emissions would approximately 108 $MTCO_2e$/year. This is much smaller than the screening level of the County P&D or other thresholds within other jurisdictions. As stated, the rebuilt bridge will not create an increase of traffic of trucks or cars. Table 4 shows annual and total greenhouse gas emissions from the construction phase of the project. Project construction activities would result in an insignificant contribution to GHGs and global climate change.

6.0 REFERENCES

CalEEMod. 2013. (version 2013.2.2) California Emissions Estimator Model. Available online at: http://www.caleemod.com

2011a. EMFAC2011 Motor Vehicle Emission Inventory Model. Available online at: http://www.arb.ca.gov/msei/categories.htm#offroad_motor_vehicles

2011. OFFROAD2011 Emissions Model. Available online at: http://www.arb.ca.gov/msei/offroad/offroad.htm.

Santa Barbara County Air Pollution Control District. 2011. Scope and Content of Air Quality Sections in Environmental Documents. December 2011.

City of Goleta, City CEQA Thresholds Manual. County of Santa Barbara Environmental Thresholds and Guidelines Manual October 2002. Available online at: http://www.cityofgoleta.org/index.aspx?page=459

United States Environmental Protection Agency. AP-42, Compilation of Air Pollutant Emission Factors USEPA. http://www.epa.gov/ttnchie1/ap42/.

TABLES

TABLE 1
ONSITE AND OFFSITE CONSTRUCTION EQUIPMENT (PIECES PER MONTH) FOR HOLLISTER BRIDGE

Equipment Type	HP	Month 1	Month 2	Month 3	Month 4	Month 5	Month 6	Month 7	Month 8	Month 9	Month10	Month 11	Month 12
Grader	175	1	1	1	1	1	1	1	1	1	1	1	1
Excavator	175	1	1	1	1	1	1	1	1	1	1	1	1
Drill Rigs	175	0	2	2	2	2	2	1	1	1	1	1	1
Crane	500	1	1	1	1	1	1	1	1	1	1	1	1
Concrete Pump Truck	250	0	1	1	1	1	1	1	1	1	1	1	1
Pumps	175	2	2	2	2	2	2	0	0	0	0	0	0
Forklifts	175	2	2	2	2	2	2	1	1	1	1	1	1
Tractors/Loaders/Backhoes	175	2	2	2	2	2	2	2	2	2	2	2	2
Water Truck	250	1	1	1	1	1	1	1	1	1	1	1	1
Air Compressor	175	2	2	2	2	2	2	2	2	2	2	2	2
Paving Equipment	175	1	1	1	1	1	1	1	1	1	1	1	1
Off Highway Trucks	250	2	2	2	2	2	2	2	2	2	2	2	2
Other General Industrial Equipment	175	2	2	2	2	2	2	2	2	2	2	2	2
Total	**–**	**17**	**20**	**20**	**20**	**20**	**20**	**16**	**16**	**16**	**16**	**16**	**16**

CONTINUED ON NEXT PAGE →

TABLE 1 (CONTINUED)
ONSITE AND OFFSITE CONSTRUCTION EQUIPMENT (PIECES PER MONTH) FOR HOLLISTER BRIDGE

Equipment Type	HP	Month 13	Month 14	Month15	Month 16	Month 17	Month 18	Month 19	Month 20	Month 21	Month 22	Month 23	Month 24
Grader	175	1	1	1	1	1	1	1	1	1	1	1	1
Excavator	175	1	1	1	1	1	1	1	1	1	1	1	1
Drill Rigs	175	1	1	1	1	1	1	0	0	0	0	0	0
Crane	500	1	1	1	1	1	1	0	0	0	0	0	0
Concrete Pump Truck	250	1	1	1	1	1	1	1	1	1	1	1	1
Pumps	175	2	2	2	2	2	2	0	0	0	0	0	0
Forklifts	175	2	2	2	2	2	2	1	1	1	1	1	1
Tractors/Loaders/Backhoes	175	2	2	2	2	2	2	1	1	1	1	1	1
Water Truck	250	1	1	1	1	1	1	1	1	1	1	1	1
Air Compressor	175	2	2	2	2	2	2	1	1	1	1	1	1
Paving Equipment	175	1	1	1	1	1	1	1	1	1	1	1	1
Off Highway Trucks	250	2	2	2	2	2	2	1	1	1	1	1	1
Other General Industrial Equipment	175	2	2	2	2	2	2	1	1	1	1	1	1
Total	**–**	**19**	**19**	**19**	**19**	**19**	**19**	**10**	**10**	**10**	**10**	**10**	**10**

TABLE 2
CONSTRUCTION LABOR FORCE (LABORERS PER MONTH WITH SUPERVISION) FOR HOLLISTER BRIDGE REPLACEMENT

	Working hours Per Day	Working Days per Week	Workforce Estimates
Month 1	10	6	20
Month 2	10	6	20
Month3	10	6	20
Month 4	10	6	20
Month 5	10	6	20
Month 6	10	6	20
Month 7	8	5	10
Month 8	8	5	10
Month 9	8	5	10
Month 10	8	5	10
Month 11	8	5	10
Month 12	8	5	10
Month 13	10	6	20
Month 14	10	6	20
Month15	10	6	20
Month 16	10	6	20
Month 17	10	6	20
Month 18	10	6	20
Month19	8	5	8
Month 20	8	5	8
Month 21	8	5	8
Month 22	8	5	8
Month 23	8	5	8
Month 24	8	5	8

TABLE 3
OFF SITE CONSTRUCTION DELIVERY ACTIVITY (ONE WAY TRIPS PER MONTH) FOR HOLLISTER BRIDGE REPLACEMENT

Vehicle Type	Material Delivery Trucks[1]	Import/Export Trucks[2]
Month 1	260	92
Month 2	260	206
Month3	270	194
Month 4	260	19
Month 5	260	16
Month 6	270	14
Month 7	168	14
Month 8	184	14
Month 9	168	14
Month 10	168	14
Month 11	184	14
Month 12	168	14
Month 13	250	403
Month 14	260	408
Month15	260	19
Month 16	270	16
Month 17	260	14
Month 18	260	14
Month 19	88	14
Month 20	88	14
Month 21	88	14
Month 22	80	11
Month 23	92	0
Month 24	80	0

[1] Heavy Heavy Duty Diesel (80,000 lbs gross vehicle weight).
[2] CalEEMod Default trips per cubic yard of material

TABLE 4
ANNUAL GREENHOUSE GAS EMISSIONS
FOR HOLLISTER BRIDGE REPLACEMENT PROJECT

	Bio-CO_2[1]	NBio-CO_2[1]	Total CO_2	CH_4	N_20	CO_2e[2]
2015 Total Construction Emissions (MT/yr)	0	1,314.14	1,314.14	0.26	0	**1,319.66**
2016 Total Construction Emissions (MT/yr)	0	1,649.73	1,649.73	0.33	0	**1,656.67**
2017 Total Construction Emissions (MT/yr)	0	252.38	252.38	0.06	0	**253.66**
					Total Construction (MT)	**3,229.99**

[1] Biological derived = Bio-CO_2, Anthropogenic manmade CO_2 = NBio-CO_2.

[2] Includes Global Warming Potential (GWP) for CH4 and N2O.

FIGURES

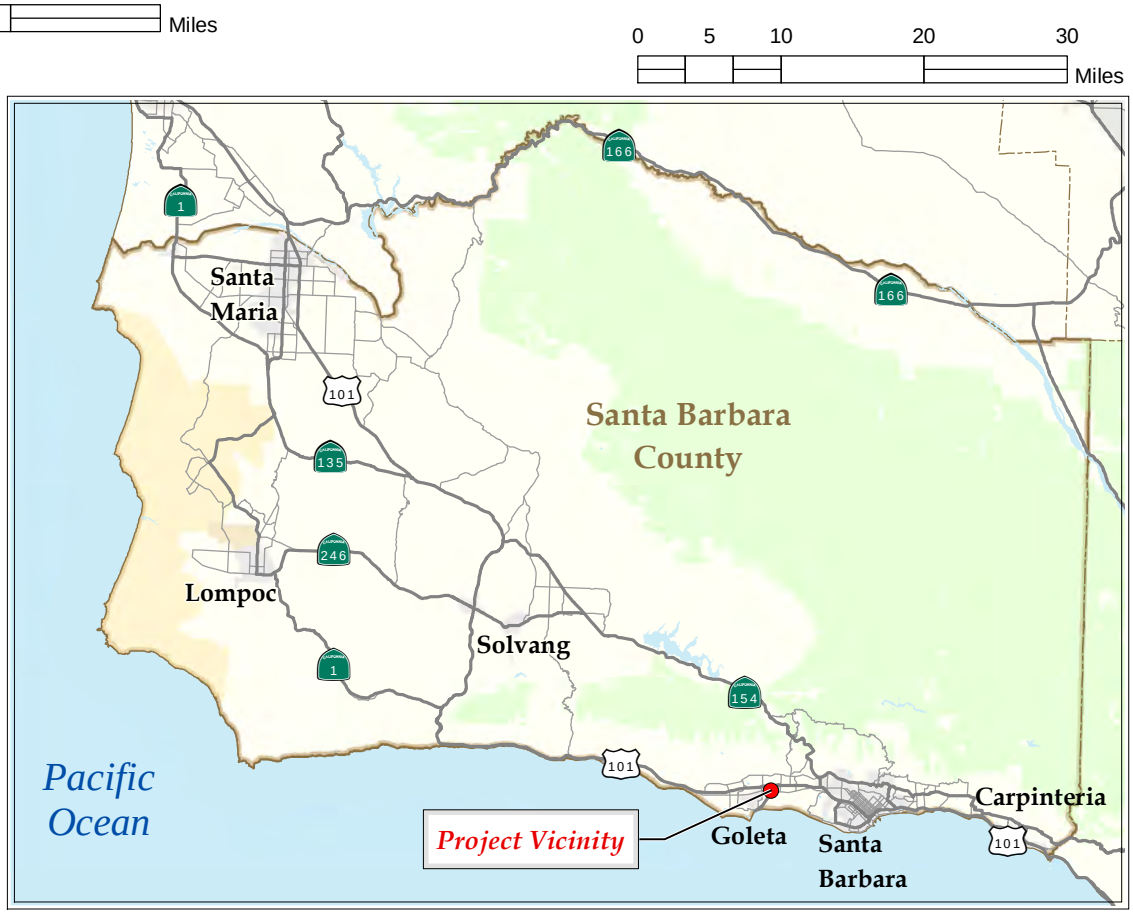

Hollister Avenue Bridge Replacement Project City of Goleta, CA 05-SB-0-GLTA BRLS-5481 (013)	**Source:** [1] The layer, below 1:3m, presents the 50 states, the District of Columbia, and Puerto Rico of the United States. It provides detailed boundaries that are consistent with the block group, tract, and county data sets and are	**Figure 1.** PROJECT VICINITY	2013
URS Corporation			

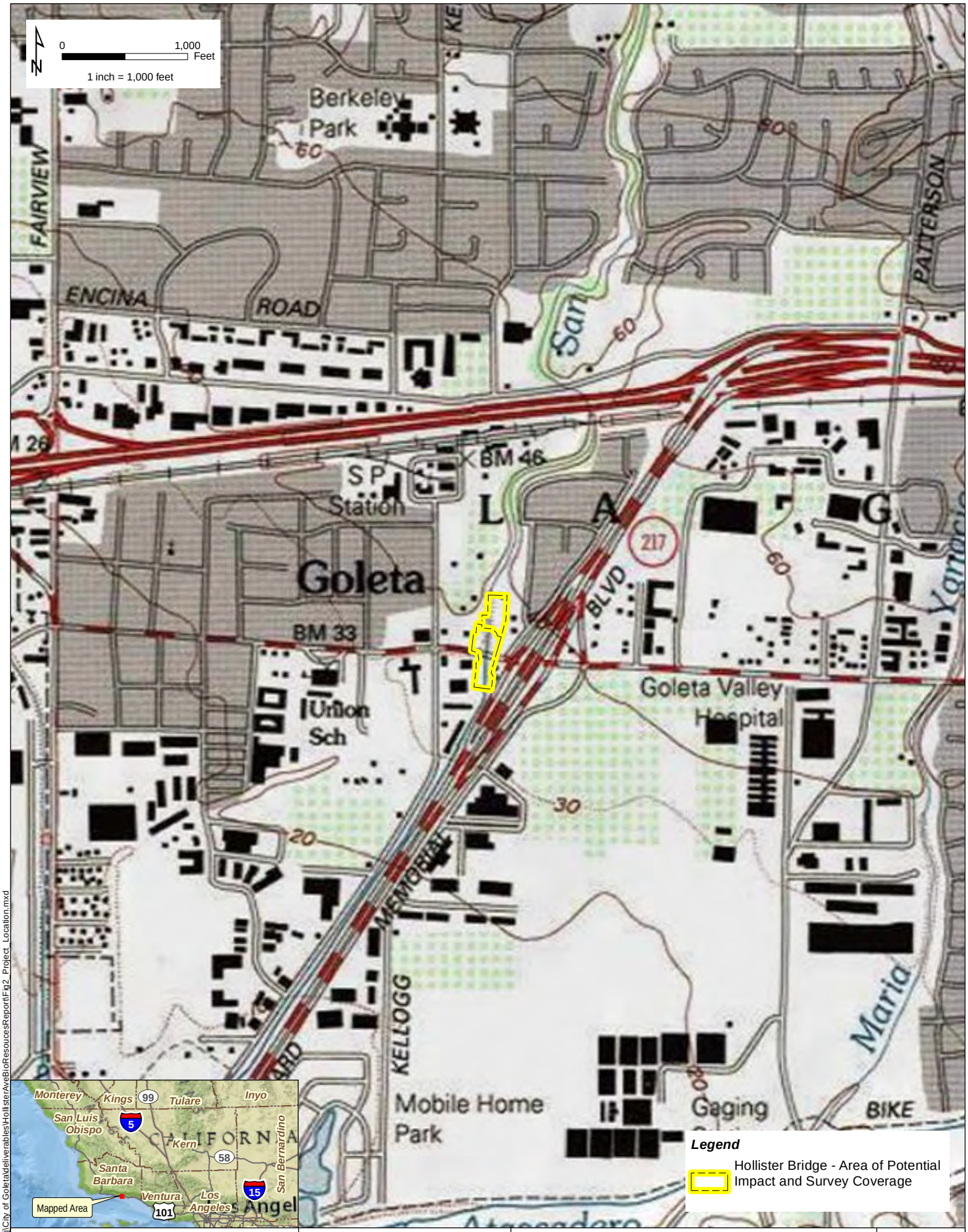

V:\Projects\GIS_Proj\City of Goleta\deliverables\HollisterAveBioResoucesReport\Fig2_Project_Location.mxd

Hollister Avenue
Bridge Replacement Project
City of Goleta, CA
05-SB-0-GLTA BRLS-5481 (013)

URS Corporation

Source: [1] Seamless, scanned images of United States Geological Survey (USGS) paper topographic 1:24,000 scale,Goleta Quad 1988, Copyright: 2013 National Geograpic Society, i-cubed.

Figure 2. PROJECT LOCATION AND SURVEY COVERAGE

2014

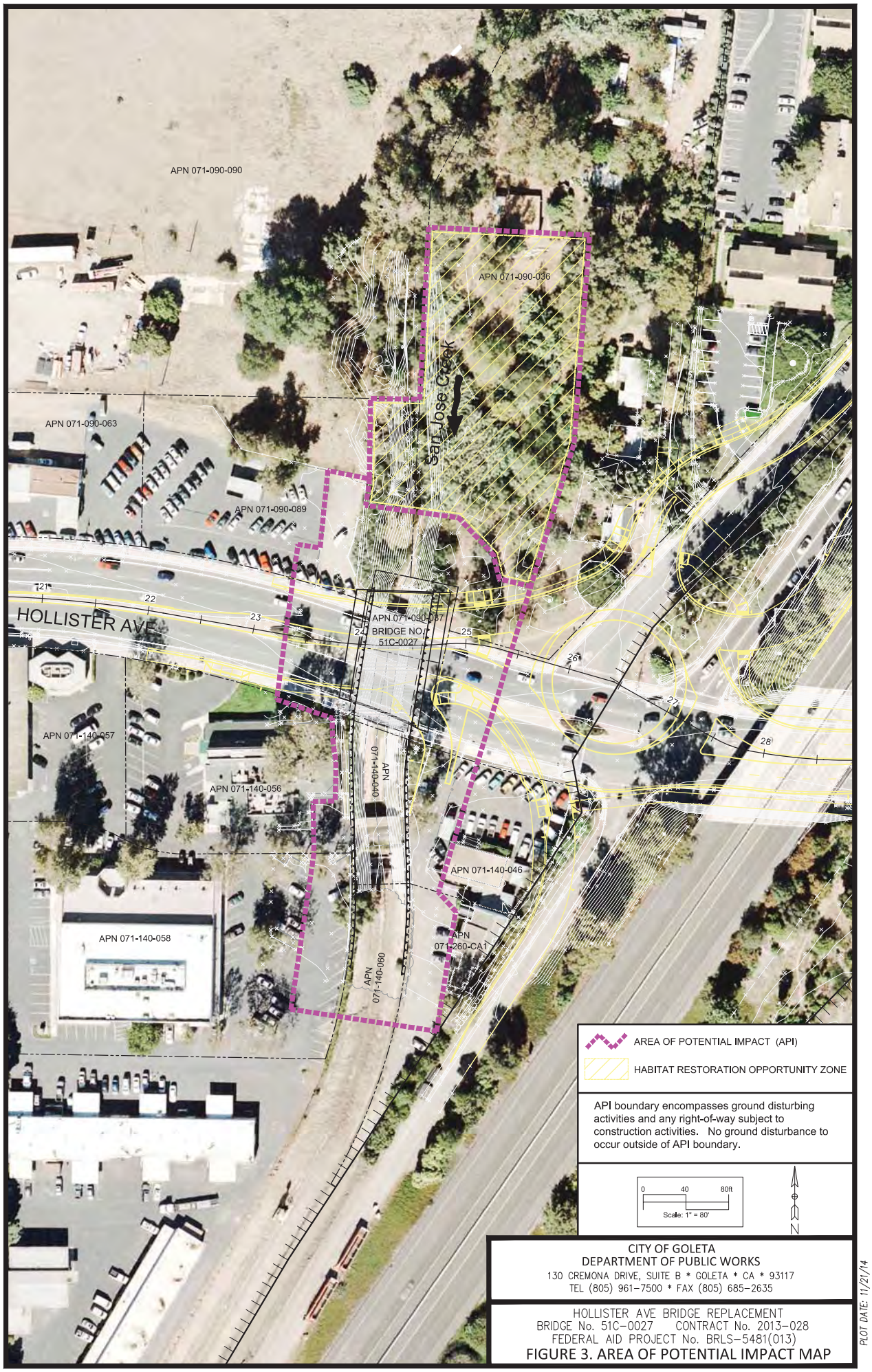

CITY OF GOLETA
DEPARTMENT OF PUBLIC WORKS
130 CREMONA DRIVE, SUITE B * GOLETA * CA * 93117
TEL (805) 961-7500 * FAX (805) 685-2635

HOLLISTER AVE BRIDGE REPLACEMENT
BRIDGE No. 51C-0027 CONTRACT No. 2013-028
FEDERAL AID PROJECT No. BRLS-5481(013)

FIGURE 3. AREA OF POTENTIAL IMPACT MAP

PLOT DATE: 11/21/14

APPENDIX F
INITIAL SITE ASSESSMENT

Initial Site Assessment (ISA) Checklist

Project Information

Hollister Av Br Replacement BRLS-5481 (013) 05-SB-0-GLTA

Project Name: Hollister Avenue Bridge Replacement Project

Prepared for: City of Goleta

Prepared by: Tricia Winterbauer, URS Corporation (805) 692-0651

Description: The Hollister Avenue Bridge Replacement Project is proposed to replace the existing 4-lane Hollister Avenue Bridge with a new 4-lane bridge located adjacent to the State Route 217/Hollister Avenue Interchange (see attached Figures 1-3). The existing bridge, constructed in 1964 and widened in 1981, consists of pre-stressed concrete voided slab units supported on concrete abutments and driven piles. The bridge was constructed using reactive aggregate and there is significant cracking in the deck and pile cap/beam. The triggering deficiency resulting in the need for bridge replacement is for waterway inadequacy. The bridge can only convey 25-year flood flows and is a contributing factor to flooding that occurs in Goleta's Old Town area. The objectives of the project are to replace the existing functionally obsolete bridge with a new bridge that will convey 100-year storm flows and meet current design standards to provide for safe crossing over San Jose Creek for vehicles and pedestrians. A privately owned steel bridge located about 100 feet south of the Hollister Avenue Bridge will continue to be utilized for as long as possible to provide vehicular access to the businesses located south of Hollister Avenue and between San Jose Creek and the State Route 217 southbound on-ramp, but will ultimately be removed as part of the Project.

Is the project on the HW Study Minimal-Risk Projects List (HW1) - No

Project Manager: Rosemarie Gaglione (City of Goleta) - phone # (805) 961-7569

Project Engineer: Craig Drake (Drake Haglan & Associates) - phone # (916) 363-4210

Project Screening

1. Project Features: New R/W? **Yes (additional ROW acquisitions and easement needed)**

   Excavation? **Yes** Railroad Involvement? **No**

   Structure demolition/modification? **Yes** Subsurface utility relocation? **Yes**

2. Project Setting

   Rural or Urban: **Urban**

Current land uses: **The primary land use in the area of potential impact is transportation, consisting of paved roadways and asphalt parking areas.**

Adjacent land uses:

North: Undeveloped land and the San Jose Creek

East: Dearborn Place, Hollister Avenue, undeveloped land, residential/commercial land

South: San Jose Creek, commercial development and asphalt parking areas

West: Hollister Avenue, commercial development and asphalt parking areas

3. Check federal, State, and local environmental and health regulatory agency records as necessary, to see if any known hazardous waste site is in or near the project area. If a known site is identified, show its location on the attached map and attach additional sheets, as needed, to provide pertinent information for the proposed project. **URS contracted with Environmental Data Resources (EDR) to conduct a search for facilities listed by regulatory agencies as potentially having environmental concerns. The complete list of databases reviewed is provided in the EDR Database Report (on file in the URS Santa Barbara office) and is summarized below in the Historical Use section "Database List Search".**

4. Field Inspection Date: **September 19, 2013**

STORAGE STRUCTURES / PIPELINES:

Underground tanks: **None Identified** Surface tanks: **None Identified**

Sumps: **None Identified** Ponds: **None Identified**

Drums: **None Identified** Basins: **San Jose Creek**

Transformers: **None Identified** Landfill: **None Identified**

Other: N**one Identified**

CONTAMINATION: (spills, leaks, illegal dumping, etc.)

Surface staining: **None Identified** Oil sheen: **None Identified**

Odors: **None Identified** Vegetation damage: **None Identified**

Other: **Groundwater monitoring wells were identified on the eastern portion of the property associated with the historical release of fuel from leaking underground storage tanks located on the adjacent property to the east.**

Additional information regarding this is summarized below in Previous Environmental Investigation.

HAZARDOUS MATERIALS: (asbestos, lead, etc.)

Buildings: **Bridge Structures Only – No Buildings**

Spray-on fireproofing: **None Identified**

Pipe wrap: **None Identified**

Friable tile: **None Identified**

Acoustical plaster: **None Identified**

Serpentine: **None Identified**

Paint: **Lead-Based Paint (LBP) was identified as discussed below.**

An Asbestos and Lead-Containing Survey Report was prepared by Geocon on March 14, 2014. The survey included the Hollister Avenue Bridge and a privately owned steel bridge located adjacent to and south of the Hollister Avenue Bridge The objective of the Survey Report was to assess the potential presence and quantity of asbestos-containing materials (ACM) and LBP at the Site prior to bridge demolition. A total of 18 bulk asbestos samples representing 6 suspect materials were collected during the survey. A total of three bulk samples of suspect LBP were collected during the survey. The survey identified the following hazardous building materials:

- Chrysotile asbestos at concentration of 60-65% was detected in samples representing approximately 4 square feet of nonfriable guard rail shims located under rail posts on the Hollister Avenue Bridge walls.
- Approximately 40 square feet of intact gray paint (used for graffiti abatement) applied to the concrete bridge rail walls on the Hollister Avenue Bridge exhibited a total lead concentration of 100 mg/kg and a WET lead concentration of 4.0 mg/l.
- Intact red/yellow paint applied to the steel bridge exhibited a total lead concentration of 200,000 mg/kg
- Intact yellow/red paint applied to the steel bridge floor exhibited a total lead concentration of 110,000 mg/kg.
- A composite analysis of the red/yellow and yellow/red paints on the steel bridge exhibited a TCLP lead concentration of 740 mg/l.\

5. Additional record search, as necessary, of subsequent land uses that could have resulted in a hazardous waste site. Use the attached map to show the location of potential hazardous waste sites. **See the discussion of Historical Use below.**

6. Other comments and/or observations: **None**

ISA Determination

Does the project have potential hazardous waste involvement? **NO.** If there is known or potential hazardous waste involvement, is additional ISA work needed before task orders can be prepared for the Investigation? **NA**. If "YES," explain; then give an estimate of additional time required: **N/A**

HISTORICAL USE

URS reviewed readily available historical data pertaining to the property. These references were reviewed for evidence of activities that would suggest the potential presence of hazardous substances at the property and to evaluate the potential for the property to be impacted by off-site sources of contamination. The following subsections are a summary of the review.

Historical Topographic Maps

URS reviewed the following U.S. Geological Survey (USGS) 7.5-minute Quadrangle maps of California provided in the EDR Historical Topographic Map Report: Southern CA Sheet 3 (1910) and Goleta (1938, 1947, 1951, 1967, 1982, 1988, and 1995) to provide topographic map coverage of the property and vicinity (on file in the URS Santa Barbara Office). The following is a summary of the review.

1910 The Southern CA Sheet 3 map depicts the property and surrounding areas as undeveloped land.

1938 An improved road, assumed to be Hollister Avenue appears to cross the property in an east/west direction. No significant changes are observed on adjacent properties or in the site vicinity.

1947 No significant changes are observed to the property. Improved roads and commercial development is observed on adjacent properties and in the site vicinity.

1951 No significant changes are observed to the property or adjacent properties. US Highway 101 is observed to the north of the property. The Santa Barbara Airport is observed in the site vicinity.

1967 No significant changes are observed to the property. Commercial development is observed on the adjacent property to the south. Clarence Ward Memorial Boulevard (State Route 217) and the State Route 217/Highway 101 Interchange are observed northeast of the property.

1982 No significant changes are observed to the property. Additional structures are observed on the adjacent properties to the south. Commercial development is observed in the site vicinity.

1988 No significant changes are observed to the property, adjacent properties or site vicinity.

1995 No significant changes are observed to the property, adjacent properties or site vicinity.

Historical Aerial Photographs

The general type of activity and land use can often be discerned from the type and layout of structures visible in an aerial photograph; however, specific elements of a site operation cannot normally be determined from the photographs. Considering these conditions, URS reviewed historical aerial photographs dated 1928, 1938, 1947, 1956, 1967, 1975, 1989, 1994, 2005, 2009, 2010, and 2012 that were provided by EDR (on file in the URS Santa Barbara Office). The following is a summary of the review.

1928 The property is depicted as undeveloped land. An improved road, assumed to be Hollister Avenue, appears to cross the property in an east/west direction. No structures are observed on the property. The adjacent properties are also depicted as undeveloped land and appear to be used for agricultural purposes.

1938 No significant changes were observed to the property. The surrounding area continues to be used for agricultural purposes.

1947 No significant changes were observed to the property or adjacent properties. US Highway 101 is now observed to the north of the property.

1956 No significant changes were observed to the property, adjacent properties or site vicinity.

1967 State Route 217 is now observed adjacent to the property. Commercial development is observed south, southwest, and northwest of the property. The State Route 217/Highway 101 Interchange is observed northeast of the property.

1975 No significant changes are observed to the property or adjacent properties. Increased commercial development is observed in the site vicinity.

1989 No significant changes are observed to the property, adjacent properties or site vicinity.

1994 No significant changes are observed to the property, adjacent properties or site vicinity.

2005 No significant changes are observed to the property, adjacent properties or site vicinity.

2009 No significant changes are observed to the property, adjacent properties or site vicinity.

2010 No significant changes are observed to the property, adjacent properties or site vicinity.

2012 No significant changes are observed to the property, adjacent properties or site vicinity.

PREVIOUS ENVIRONMENTAL INVESTIGATION

An area of residual impacted soil was encountered at the 5551 Hollister Avenue property within the flood control easement of the San Jose Creek. This area is located to the south of the Hollister Avenue Bridge. Based on analytical results, total petroleum hydrocarbons (TPH) was reported to be up to 330 mg/kg in soil. According to Permit to Operate #14247 with the Santa Barbara County Air Pollution Control District, dated August 21, 2013, approximately 1,500 cubic yards of petroleum-impacted soil was removed from the San Jose Creek located adjacent to the west of the 5551 Hollister Avenue property. No further investigation or remediation is reportedly required in this area. Additional information regarding this property is summarized below (see Database List Search).

DATABASE LIST SEARCH

URS contracted with EDR to conduct a search for facilities listed by regulatory agencies as potentially having environmental concerns. The complete list of databases reviewed is provided in the EDR Database Report (on file in the URS Santa Barbara office), and is summarized below. It should be noted that this information is reported as received by URS from EDR, which in turn reports information as provided in various government databases. It is not possible for either URS or EDR to verify the accuracy or completeness of information contained in these databases. However, the use of and reliance on this information is a generally accepted practice in the conduct of environmental due diligence.

Property

The property was not identified on any of the databases searched by EDR.

Adjacent Properties

The EDR Report identified the following facilities adjacent to the property:

Mission City Auto Leasing at 5551 Hollister Avenue was identified on the HIST CORTESE, LUST, CUPA Listings, and SWEEPS UST databases. The site was reported to be a LUST Cleanup Site. Case status was reported as Open-Eligible for Closure. The site has undergone SVE, H2O2 injection, and shallow excavation in an effort to address the various concerns at the site. It was reported that current groundwater monitoring suggests that residual impacts are not affecting groundwater and this site may soon be eligible for case closure. Additional information regarding this facility is summarized above (see Previous Environmental Investigation).

HEI MAC Motors at 5590 Hollister Avenue was identified on the RCRA-SQG, FINDS, and CUPA Listings databases. The facility is reported to be a small quantity generator of hazardous waste. The facility's EPA ID is CAD983582628. No violations were reported. Based on the regulatory status of this facility, it is not anticipated to impact the property.

Hilton Sumida Land Trust at 170 South Kellogg Avenue was identified on the CUPA Listings database. No additional information was provided by EDR. Based on the regulatory status of this facility, it is not anticipated to impact the property.

Site Vicinity

URS reviewed the EDR database report to identify off-site facilities that have suspected or documented environmental concerns or Recognized Environmental Conditions (REC) that may negatively impact the property. URS' criteria for further evaluating the potential impact of a listed off-site facility are summarized below:

- The listed off-site facility is documented or assumed to be hydrogeologically upgradient and a likely pathway exists for known releases of environmentally mobile contaminants in groundwater to reach the property; or, contaminants from the listed off-site facility can reach the property through other pathways (i.e., surface runoff); and,

- The off-site facility is listed as an open case on one of the following databases: Federal NPL, Federal CORRACTS, Federal CERCLIS, Federal ERNS, and State-Specific lists including State Hazardous Waste Sites, State SCL, State LUST, State Deed Restrictions, State Toxic Pits, Landfill (excluding transfer stations); or
- The facility is a known or suspected concern based on URS' experience or observations made during the site reconnaissance. (i.e., Dry-cleaning operations that may or may not be listed as RCRA-SQG or a non-adjacent UST site that appears to have a remediation system in place).

Toyota at 5611 Hollister Avenue was identified on the LUST database. The facility was reported to be a small quantity generator of hazardous waste. The facility's EPA ID is CAD981569866. The facility was reported to be a LUST Cleanup Site. Case status was reported as Completed-Case Closed on November 6, 2006. Based on the regulatory status of this facility, it is not anticipated to impact the property.

World Oil Marketing Company #55 at 5648 Hollister Avenue was identified on the LUST database. The facility was reported to be a small quantity generator of hazardous waste. The facility's EPA ID is CAD981160757.The facility was reported to be a LUST Cleanup Site. Case status was reported as Open-Remediation on January 5, 1993. Based on the distance of the facility from the property, it is not anticipated to impact the property.

McCormix Corp at 55 South Kellogg Avenue was identified on the LUST database. The facility was reported to be a LUST Cleanup Site. Case status was reported as Completed-Case Closed on May 31, 2012. Based on the regulatory status of this facility, it is not anticipated to impact the property.

Orphan Sites

URS reviewed EDR's Orphan Summary, which is a listing of sites that have not been geo-coded (coded and plotted on EDR maps) based on lack of sufficient data regarding their

exact location within the general area. The property was not identified as an Unmapped Site. No additional Unmapped Sites identified on the Orphan Summary appear to be located within the ASTM-designated radii of the property, and, therefore, URS has no evidence that these sites had an impact on the property.

CONCLUSIONS/RECOMMENDATIONS

Asbestos

Prior to demolition work that could disturb identified ACMs, an ACM Abatement and Management Plan should be prepared. Asbestos abatement shall be conducted during demolition activities, consistent with Federal Occupational Safety and Health Administration (OSHA) and air quality regulations. The Management plan will include:

- Detailed information regarding ACM classification
- ACM hazard assessment (the possibility of fiber release from ACM is based on the materials condition, such as friability)
- ACM inventory information, training and qualification for workers
- Demolition handling procedures, waste management and disposal procedures, and emergency response procedures (in case of a release of friable materials)

A licensed asbestos abatement removal contractor shall remove the identified ACMs under the oversight of a California Certified Asbestos Consultant. The ACM removal should include notification of demolition activities to the County of Santa Barbara Air Pollution Control District.

Federal OSHA regulates asbestos as a worker health and safety issue through the Asbestos Standards for the Construction Industry (ASCI). U.S. Environmental Protection Agency (USEPA) regulations concerning the identification, handling, management, and abatement of ACMs is found in the Asbestos Hazard Emergency Response Act (AHERA) and the National Emission Standards for Hazardous Air Pollutants (NESHAP).

<u>Asbestos Standard for the Construction Industry</u>

The ASCI (29 CFR 1926.1101; 8 CCR 1529), administered by OHSA and California OSHA (Cal-OSHA), regulates asbestos exposure in the workplace for abatement workers and contractors. The ASCI:

- Specifies how workers and the public are to be protected during removal
- Provides medical surveillance requirements for workers
- Provided detailed requirements for how asbestos is to be removed
- Defines training requirements for abatement personnel.

Building materials containing at least 1 percent asbestos are considered ACMs and should be managed according to OSHA requirements.

AHERA Act 40 CFR 763, as implemented by USEPA, primarily pertains to the assessment and management of K-12 nonprofit schools. However, many of the procedures, training requirements, and certifications defined by AHERA have become the industry standard for all facilities.

National Emission Standard for Hazardous Air Pollutants 40 CFR 61

The NESHAP is an asbestos standard that protects the general public from asbestos exposure due to demolition or demolition activities. The NESHAP requires surveys for suspect materials, notification of intent to renovate or demolish or remove regulated ACMs before demolition or demolition activities, and proper management of asbestos-containing waste.

Lead-Based Paint

LBP should be removed prior to demolition work that could disturb identified LBP. If the LBP remains in good condition and is not disturbed, exposures to lead are expected to be negligible. However, when LBP deteriorates, is disturbed or damaged such as during demolition or renovation operations, lead dust may be released, creating potential health hazards.

URS recommends the following:

- The LBP that is in good condition does not need to be abated prior to renovation/demolition. However, any flaking or peeling LBP should be removed by a licensed lead abatement contractor and disposed of following federal, state, and local regulations. LBP may be disposed of as construction debris as long as it remains on the substrate.
- The renovation/demolition contractor should implement precautions to comply with OSHA 29 CFR 1926.62, Lead in Construction.
- All painted building materials should be disposed of as construction debris and the renovation/demolition contractor should not be allowed to recycle the painted material in accordance with federal, state, and local regulations for the proper disposal of LBP.

In addition to the above-mentioned recommendations, the following precautions should be taken prior to any repair or maintenance activities that would disturb LBP:

- Do not cut, sand, or drill materials containing LBP.
- Prior to initiating renovation/demolition activities that would disturb the LBP, wet the area to prevent possible release into the air.
- Remove dust with a high efficiency particulate air (HEPA) vacuum or wet wipe with disposable towels.
- Follow federal, state, and local regulations for proper disposal of LBP.

Potential Subsurface Impacts

Based on the historical impacted soil in the area of the property, there is the potential of encountering impacted soil in the vicinity of the property during demolition and construction of the bridge. A Soil Management Plan (SMP) will be prepared and implemented for project construction activities. The Plan will provide guidance for the proper handling, on-site management, and disposal of impacted soil and groundwater that may be encountered during proposed earthwork activities (e.g., excavation and grading). The SMP will outline guidelines for the following:

- Contaminated soil and groundwater identification
- Contaminated soil and groundwater assessment
- Construction and maintenance of contaminated soil storage areas
- Dust control
- Soil/groundwater waste segregation criteria
- Waste management procedures

The SMP will include practices that are consistent with Cal-OSHA regulations, as well as the Santa Barbara County Public Health Department, Environmental Health Services Unit (CUPA) land use-specific remediation standards. A hazardous materials consultant or trained professional such as a Professional Geologist or Professional Engineer, with suitable and applicable experience, will be available during earthwork activities to monitor soil and groundwater conditions encountered, in order to evaluate the absence or presence of hazardous substances associated with previous land uses. If impacted soil and/or groundwater are encountered, samples will be collected to identify the extent of contamination. In the event that contaminated soil and/or groundwater are encountered during construction, the suspect excavated soil will be stockpiled and covered on site. As required, the CUPA will be notified to evaluate whether further assessment is warranted and specify procedures for handling and disposing of contaminated soil. Contaminated soil will be removed by a licensed waste hauler to a landfill permitted to receive this type of waste.

PREPARER SIGNATURES AND QUALIFICATIONS

This section includes qualification statements of the environmental professionals responsible for conducting the ISA and preparing this report.

The site reconnaissance was conducted by Ms. Tricia Winterbauer of the URS Santa Barbara, California office. Ms. Winterbauer also conducted the data review for the project and wrote the ISA report. Ms. Winterbauer has 17 years of experience in environmental site investigations, characterizations, and assessments.

The work conducted and the report written by Ms. Winterbauer was reviewed by Mr. David Bernal, PG, with over 25 years of experience with Environmental Site Assessments.

Ms. Winterbauer declares that, to the best of her professional knowledge and belief, she meets the definition of Environmental Professional as defined in §312.10 of 40 CFR 312.

Mr. Bernal declares that, to the best of his professional knowledge and belief, he meets the definition of Environmental Professional as defined in §312.10 of 40 CFR 312.

Ms. Winterbauer has the specific qualifications based on education, training, and experience to assess a property of the nature, history, and setting of the property.

Tricia Winterbauer

Tricia Winterbauer
Senior Environmental Specialist

David M. Bernal

David Bernal, PG #5554
Principal Geologist

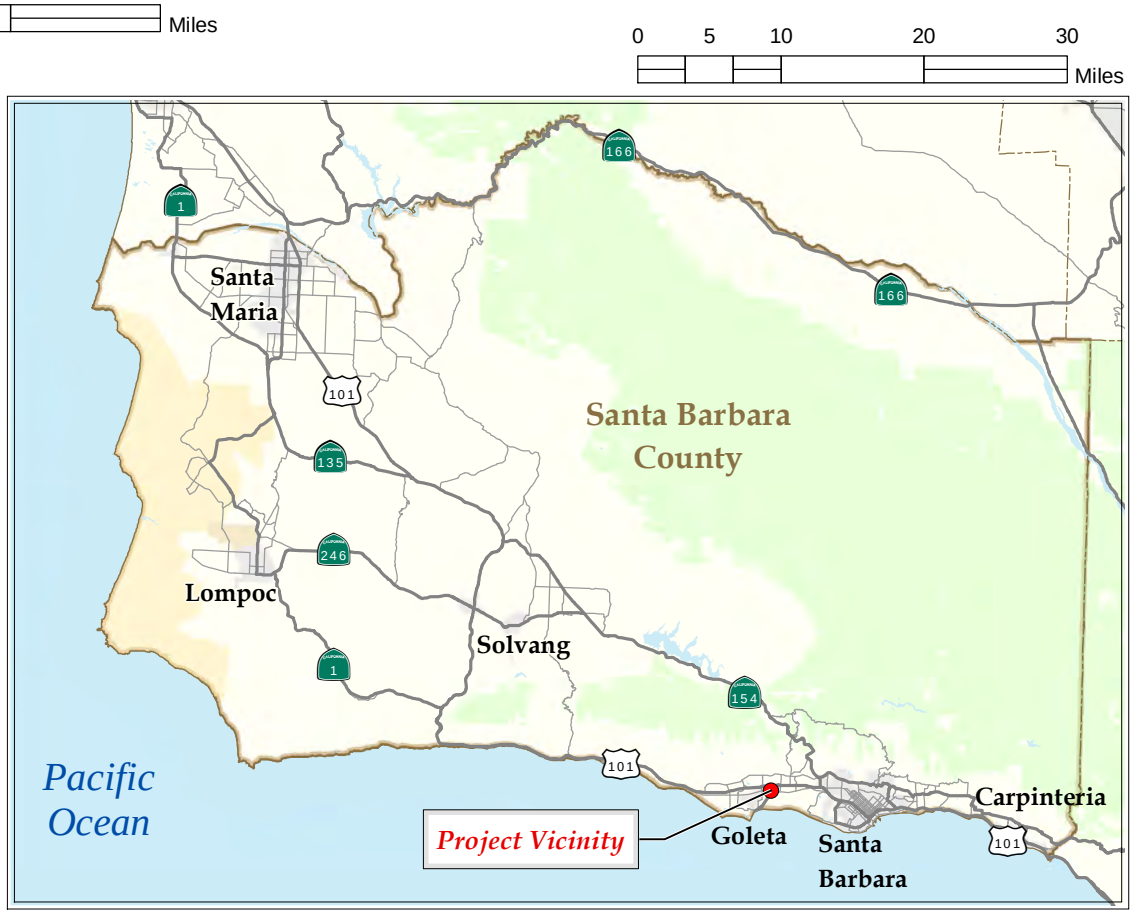

Hollister Avenue Bridge Replacement Project City of Goleta, CA 05-SB-0-GLTA BRLS-5481 (013)	**Source:** [1] The layer, below 1:3m, presents the 50 states, the District of Columbia, and Puerto Rico of the United States. It provides detailed boundaries that are consistent with the block group, tract, and county data sets and are	**Figure 1.** PROJECT VICINITY	2013
URS Corporation			

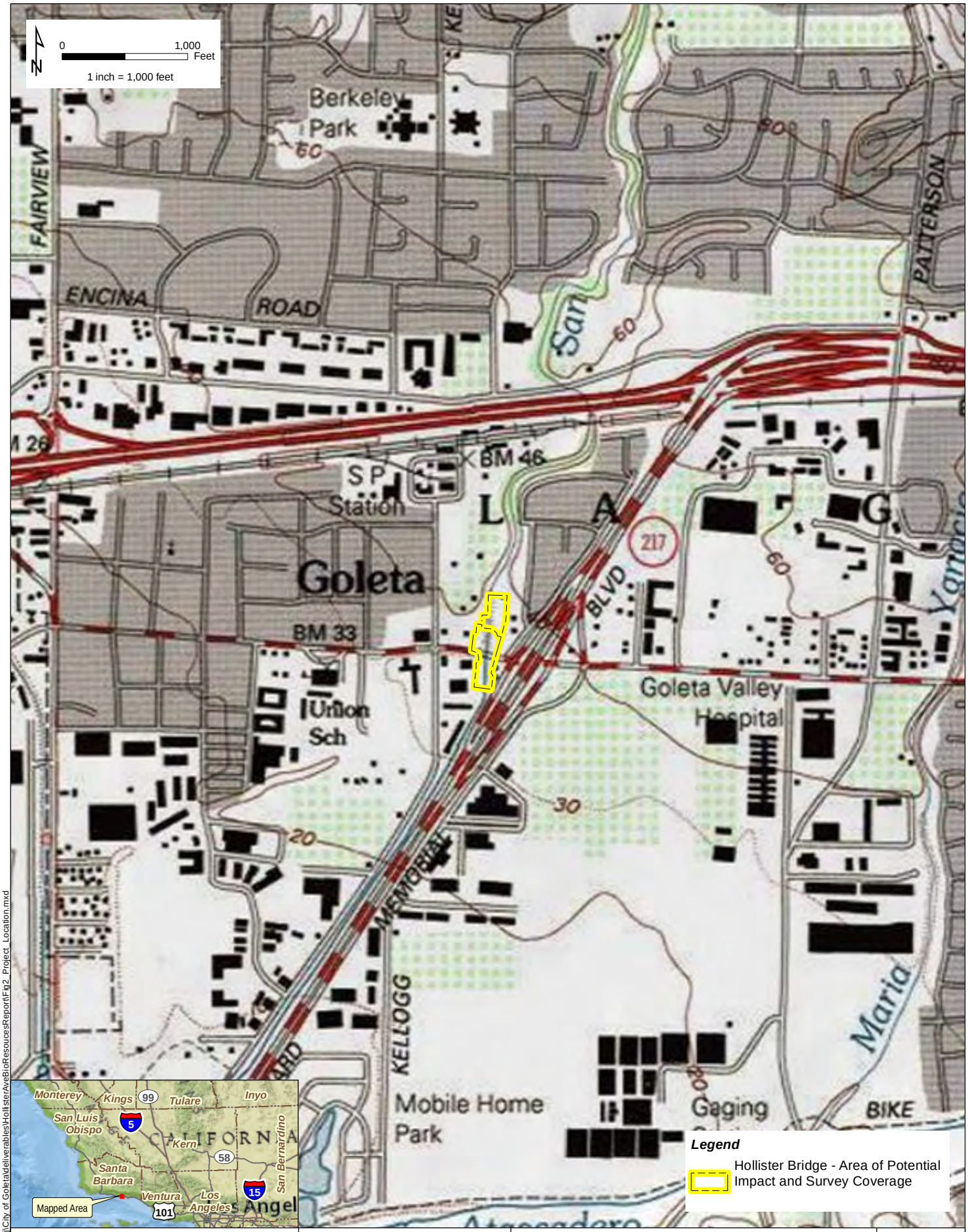

V:\Projects\GIS_Proj\City of Goleta\deliverables\HollisterAveBioResoucesReport\Fig2_Project_Location.mxd

Hollister Avenue
Bridge Replacement Project
City of Goleta, CA
05-SB-0-GLTA BRLS-5481 (013)

URS Corporation

Source: [1] Seamless, scanned images of United States Geological Survey (USGS) paper topographic 1:24,000 scale,Goleta Quad 1988, Copyright: 2013 National Geograpic Society, i-cubed.

Figure 2. PROJECT LOCATION AND SURVEY COVERAGE

2014

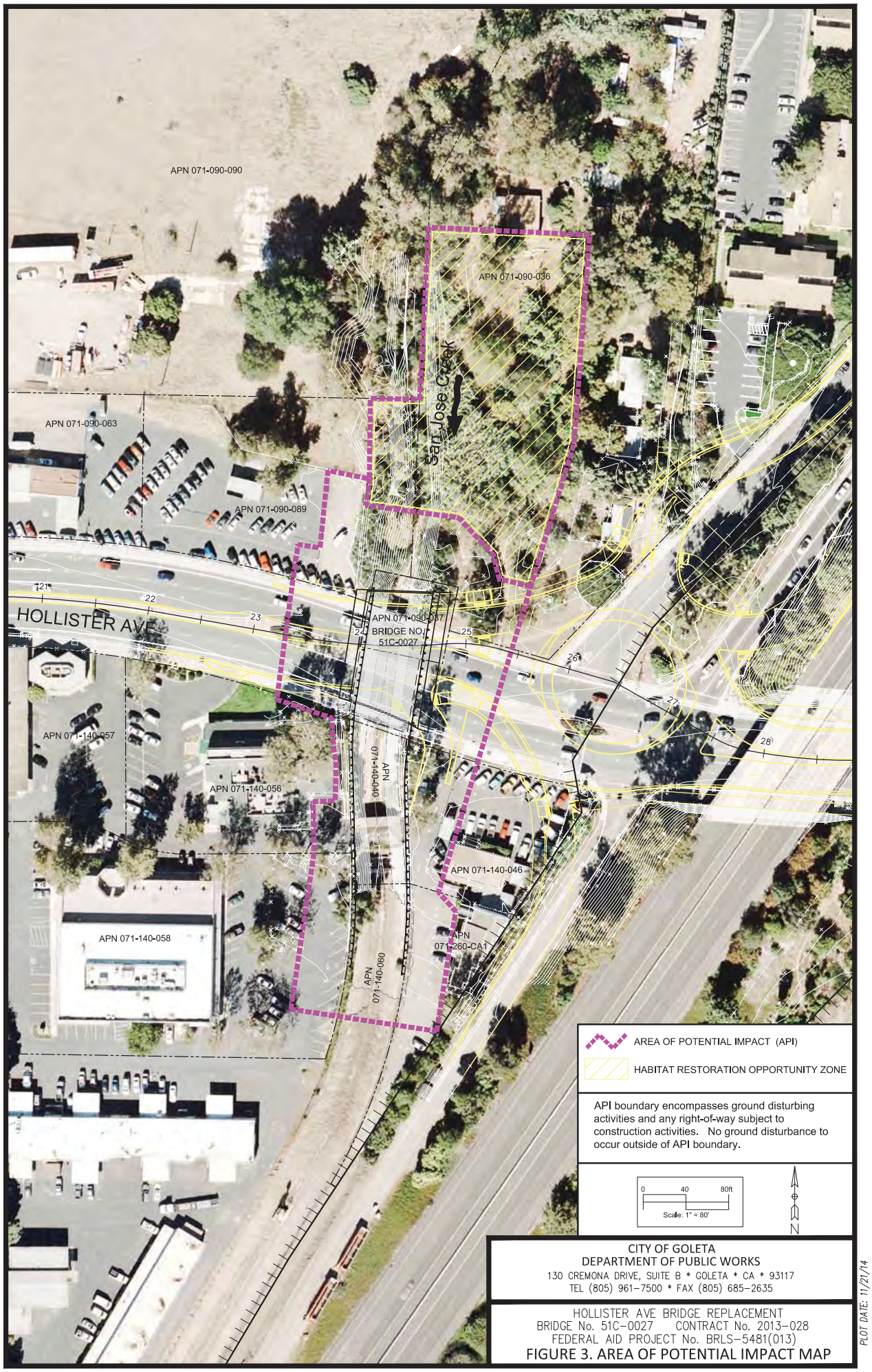

CITY OF GOLETA
DEPARTMENT OF PUBLIC WORKS
130 CREMONA DRIVE, SUITE B * GOLETA * CA * 93117
TEL (805) 961-7500 * FAX (805) 685-2635

HOLLISTER AVE BRIDGE REPLACEMENT
BRIDGE No. 51C-0027 CONTRACT No. 2013-028
FEDERAL AID PROJECT No. BRLS-5481(013)

FIGURE 3. AREA OF POTENTIAL IMPACT MAP

PLOT DATE: 11/21/14

APPENDIX G
CONSTRUCTION NOISE IMPACT ASSESSMENT TECHNICAL MEMORANDUM

URS

Technical Memorandum

Date: November 8, 2013

To: Ms. Rosemarie Gaglione, PE, Assistant City Engineer
City of Goleta, Goleta, CA 93117

From: Paul Burge, INCE Bd. Cert. and Craig Woodman, Principal Project Manager

Subject: Hollister Avenue Bridge Replacement Project (BRLS-5481(013)) Construction Noise Impact Assessment

1.0 INTRODUCTION

The City of Goleta proposes to replace the existing 4-lane Hollister Avenue Bridge with a new 4-lane bridge. This project also includes constructing the transition from the improved and wider San Jose Creek channel (San Jose Creek Capacity Improvement and Fish Passage Project) and bridge to the natural creek immediately upstream of the bridge. The bridge spans San Jose Creek and is adjacent to the State Route 217 and Hollister Avenue Interchange (see Figures 1–3, attached). The construction of the proposed project is anticipated to take approximately 24 months to complete. For the purpose of this analysis it is assumed that noise-producing construction activities will generally be limited to between 8:00 a.m. and 5:00 p.m. Monday through Friday, but it is also recognized that some work outside of these limits may be required temporarily under special conditions (e.g., if extra hours are needed to ensure that work in the creek is completed in the dry season).

This analysis assesses potential noise impacts due to the construction activities for the project. Nearby noise sensitive land uses, including single- and multi-family residences and commercial property, were included in this analysis. Please refer to the Area of Potential Impact Map for viewing the relationship between project elements and nearby sensitive land uses considered in this analysis.

2.0 APPLICABLE REGULATIONS

2.1 CITY OF GOLETA

2.1.1 Municipal Code

The City's municipal code includes a section on noise restrictions (Chapter 9.09) which refers primarily to such recreational noise sources as musical instruments, radios, loudspeakers, sound amplifiers, etc. However, this section does not include any specific information, restrictions, or guidance related to construction noise.

2.1.2 General Plan Noise Element

The City of Goleta General Plan, Chapter 9.0 Noise Element, includes City Policy NE 6.4, which states that the City shall restrict construction hours as a condition of approval for any land use permit or other planning permit. Noise-generating construction activities for projects near or

adjacent to residential buildings and neighborhoods or other sensitive receptors shall be limited to Monday through Friday, 8:00 a.m. to 5:00 p.m. Construction generally shall not be allowed on weekends and state holidays. While the policy provides for exceptions for emergencies or cases with extenuating circumstances on a case by case basis, no general exception is provided for municipal or roadway construction projects.

2.2 CALTRANS

Caltrans' Traffic Noise Analysis Protocol states that the noise level from the Contractor's operations, between the hours of 9:00 p.m. and 6:00 a.m., shall not exceed 86 dBA at a distance of 50 feet. It should be noted that the construction activity would not occur for the hours between 5:00 p.m. and 8:00 a.m. (in accordance with City Policy NE 6.4). Therefore, the Caltrans guidance would not be applicable to the project.

2.3 FEDERAL TRANSIT ADMINISTRATION

Federal Transit Administration (FTA) published Transit Noise and Vibration Impact Assessment (FTA Manual) includes transit project construction noise assessment methodology and impact thresholds which may be applicable to this project. There are two methodologies described in the FTA Manual: FTA General Assessment and FTA Detailed Assessment.

2.3.1 FTA General Assessment

The general assessment employs the following assumptions:

- Full power operation for one hour
- No noise attenuation by ground and air
- All equipment are assumed to operate at the center of the project
- Assume two noisiest pieces of equipment at full power operated simultaneously

The impact thresholds for the general assessment are presented in Table 1.

Table 1: General Assessment Noise Thresholds in One-hour Leq (dBA)

Land Use	*Day (7:00 a.m. to 10:00 p.m.)*	*Night (10:00 p.m. to 7:00 a.m.)*
Residential	90	80
Commercial	100	100
Industrial	100	100

2.3.2 FTA Detailed Assessment

The detailed assessment uses the following construction assumptions:

- Full power operation (Lmax)
- No excess noise attenuation by ground and air

- Equipment is assumed to operate anywhere within the site
- Equipment specific usage factor applied in terms of hours per day
- Number of each equipment used

The impact thresholds for the detailed assessment are presented in Table 2.

Table 2: Detail Assessment Noise Thresholds

	8-hour Leq (dBA)		*Ldn (dBA)*
Land Use	***Day (7:00 a.m. to 10:00 p.m.)***	***Night (10:00 p.m. to 7:00 a.m.)***	***(30-day Average)***
Residential	80	70	75[a]
Commercial	85	85	80[b]
Industrial	90	90	85[b]

Notes:

[a] In urban areas with very high ambient noise levels (Ldn>65 dB), Ldn from construction operations should not exceed existing ambient +10 dB.

[b] Twenty-four-hour Leq, not Ldn.

3.0 CONSTRUCTION EQUIPMENT AND USAGE

The provided list of planned construction equipment over a 24 month schedule was reviewed. Table 3 presents a list of proposed equipment with the average usage hours per day and the number of equipment daily used for this analysis. The equipment quantity presented in Table 3 was the maximum usage between Month 2 and Month 6, representing the worst case noise condition.

Table 3: Equipment Noise Levels and Usage

Equipment Type [a]	***Horsepower***	***Fuel Type***	***Average Usage Hours/Day***	***Total # of Each Equipment per Day***	***Reference Lmax at 50 feet [b]***
Grader	175	DIESEL	6	1	85
Excavator	175	DIESEL	4	1	85
Drill rigs	175	DIESEL	8	2	84
Crane	500	DIESEL	6	1	85
Concrete pump truck	250	GAS	8	1	82
Pumps	175	GAS	8	2	77
Forklifts	175	DIESEL	6	2	85
Tractors/loaders/backhoes	175	DIESEL	8	2	85
Water truck	250	DIESEL	4	1	88
Air compressor	175	GAS	8	2	80
Paving equipment	175	DIESEL	6	1	89
Off highway trucks	250	DIESEL	6	2	84
Other general industrial equipment	175	GAS	8	2	80

Equipment Type [a]	Horsepower	Fuel Type	Average Usage Hours/Day	Total # of Each Equipment per Day	Reference Lmax at 50 feet [b]
Total	--	--	--	20	96

Notes:
[a] Equipment list from Hollister Avenue Bridge Replacement Project, Project Description.
[b] Reference source levels from FTA Transit Noise and Vibration Impact Assessment, FHWA Roadway Construction Noise Model Users Guide, Caltrans Technical Noise Supplement.

4.0 NOISE ASSESSMENT

4.1 NOISE SENSITIVE RECEIVERS

In the vicinity of the project's Area of Potential Impact (API), three single-family residential units (all in Assessor's Parcel Number [APN] 071-090-036) and one multi-family residential unit were identified north of Hollister Avenue and two commercial properties (APN 071-140-046 and APN 071-260-CA1) were identified south of Hollister Avenue. The nearby restaurant (APN 071-140-056) was not considered as a noise sensitive receiver because it is not in operation.

For the analysis purposes, the three closest units in each receiver category were used to identify potential noise impacts. Table 4 includes the list of receivers and general distances used for the analysis.

Table 4: Noise Sensitive Receivers and Relative Distances

Receivers	Description	Distances used for General Assessment*	Distances used for Detailed Assessment*
Single-Family Residential	5546 Hollister Avenue Nearest single-family residential unit to the project, north of Hollister Avenue (5544 Hollister Avenue to be demolished).	340 feet	190 feet
Multi-Family Residential	Dearborn Apartments, 101 Dearborn Place. Nearest multi-family residential unit to the project north of Hollister Avenue.	500 feet	350 feet
Commercial	Mission City Truck Center (used car and truck dealer) 5551 Hollister Avenue and adjacent offices, nearest commercial use, east of the project, south of Hollister Avenue.	125 feet	60 feet

* Distance estimated from Project Description, Area of Potential Impact Map.

Note that the distances used for the General Assessment procedure were based on the center of the project siteat the southern end of the Hollister Avenue Bridge. The distances used for the Detailed Assessment procedure were based on the central location of the API, north of Hollister Avenue for Single- and Multi-Family Residential units and the central location of the API, south of Hollister Avenue for the commercial property.

4.2 FTA GENERAL IMPACT ASSESSMENT

As presented in Table 3, the two noisiest pieces of equipment are the Water Truck and Paving Equipment as identified in Section 2.3.1. The noise level combining these two pieces of equipment would be 92 dBA at 50 feet based on the logarithmic summation. It was assumed that

the noise level would attenuate at the rate of 6 dBA per doubling of distance; Table 5 presents the results of the General Assessment.

Table 5: General Assessment Results (One-hour Leq, dBa)

Receivers	*Construction Noise Level at Receiver (dBA)*	*Impact Threshold Noise Level per Table 1 (dBA)*	*Predicted Impact*
Single-Family Residential	75	90	None
Multi-Family Residential	72	90	None
Commercial	84	100	None

4.3 FTA DETAILED IMPACT ASSESSMENT

Because the detailed assessment takes into consideration equipment usage and their location, it was unreasonable to assume that all 20 pieces of equipment identified in Table 3 would be operated at the nearest location relative to the receivers. Construction equipment would be scattered within the API. Therefore, the following assumptions were used:

- Two construction points were established - 1) at the center of API north of Hollister Avenue, and 2) at the center of API south of Hollister Avenue.
- Construction equipment operated at each point represents 1/3 of the equipment listed in Table 3.

Table 6 presents the results of the Detailed Assessment.

Table 6: Detailed Assessment Results (Daytime 8-HourLeq, dBa)

Receivers	*Construction Noise Level at Receiver (dBA)*	*Impact Threshold Noise Level per Table 2 (dBA)*	*Predicted Impact*
Nearest Single-Family Residential	79	80	None
Nearest Multi-Family Residential	74	80	None
Nearest Commercial	89	85	Impact

As shown in Table 6, no impacts are predicted for any residential receptor locations. A potential temporary construction noise impact is predicted at the nearest commercial location. This potential impact is a result of the very close proximity of the construction activity to this commercial location.

5.0 RECOMMENDED MITIGATION MEASURES

Assuming that noise-producing construction activities are limited to daytime hours as defined by applicable Caltrans and City of Goleta policy (generally 8:00 am to 5:00 pm on weekdays), no construction noise impacts are identified and no special noise mitigation measures are required

for nearby residential receptors. However, in order to complete work in the creek during the dry season work window (generally May 15 through October 15), the Contractor may need to work extended hours (e.g., six days a week and ten hours a day). If this is anticipated or required, the Contractor will coordinate with the City and nearby receptors and seek an exemption from to City Policy NE 6.4 to temporally allow for the extended work periods.

A potential temporary construction noise impact is identified at the closest commercial receptors, specifically the Mission Truck Center and adjacent office condos located south of Hollister Avenue and immediately to the east of the project API. Impacts at this area may be difficult to reduce below impact thresholds without use of temporary noise barriers, due to the proximity of the receptor to the construction activity and requirements to maintain staff and customer access to the property during construction. Temporary portable barriers or acoustical curtain systems between the construction activity and sensitive receptors may be used for certain construction activities, thereby reducing noise levels to below impact threshold (generally 85 dBA, 8-hour Leq). Plans to provide such noise mitigation elements should be coordinated with the property owners or tenants to ensure that such mitigation elements do not result in negative impacts to business operation (including business access or ability of potential customers to see the business.

In addition to any temporary noise barrier system that might be used, Caltrans Standard Specifications recommend the following general noise reduction strategies:

- Use modern construction equipment
- All powered construction equipment should have adequate mufflers and be well maintained
- Plan noisiest operations for times of least intrusion
- Use quieter alternate methods or equipment when possible
- Locate stationary noise sources away from sensitive receiver locations
- Operate equipment at minimum power as feasible

The above mitigation measures are expected to reduce noise impacts under the California Environmental Quality Act (CEQA) to less than significant levels.

6.0 REFERENCES

Hollister Avenue Bridge Replacement Project, Federal Project No. BRLS-5481(013), Project Description, September 10, 2013

California Department of Transportation, Traffic Analysis Protocol, May 2011

California Department of Transportation, Technical Noise Supplement, November, 2009

Federal Transit Administration, Transit Noise and Vibration Impact Assessment (FTA-VA-90-1003-06), May 2006

Federal Highway Administration Roadway Contraction Noise Model User's Guide (FHWA-HEP-05-054), January 2006

City of Goleta General Plan/Coastal Land Use Plan, Chapter 99.0, Noise Element, September 2006.

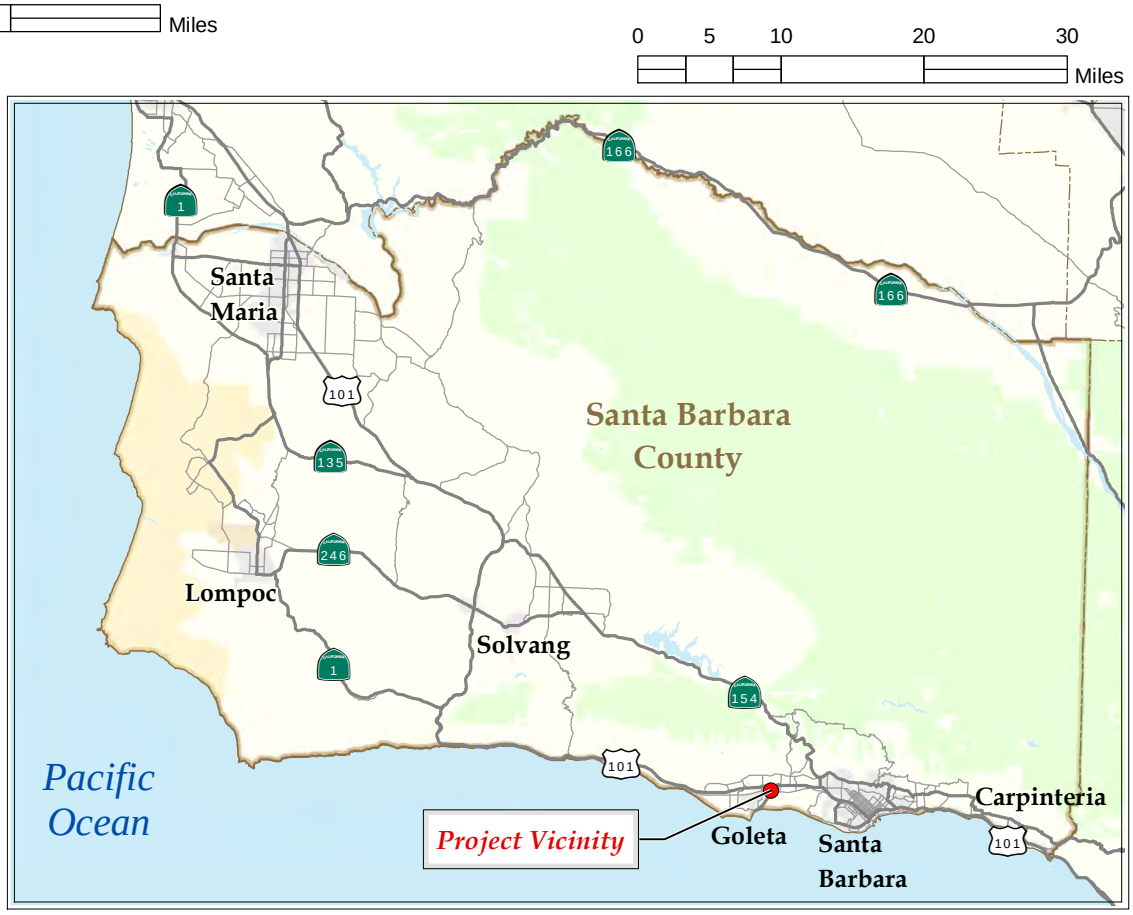

Hollister Avenue Bridge Replacement Project City of Goleta, CA 05-SB-0-GLTA BRLS-5481 (013)	**Source:** [1] The layer, below 1:3m, presents the 50 states, the District of Columbia, and Puerto Rico of the United States. It provides detailed boundaries that are consistent with the block group, tract, and county data sets and are	**Figure 1.** PROJECT VICINITY	2013
URS Corporation			

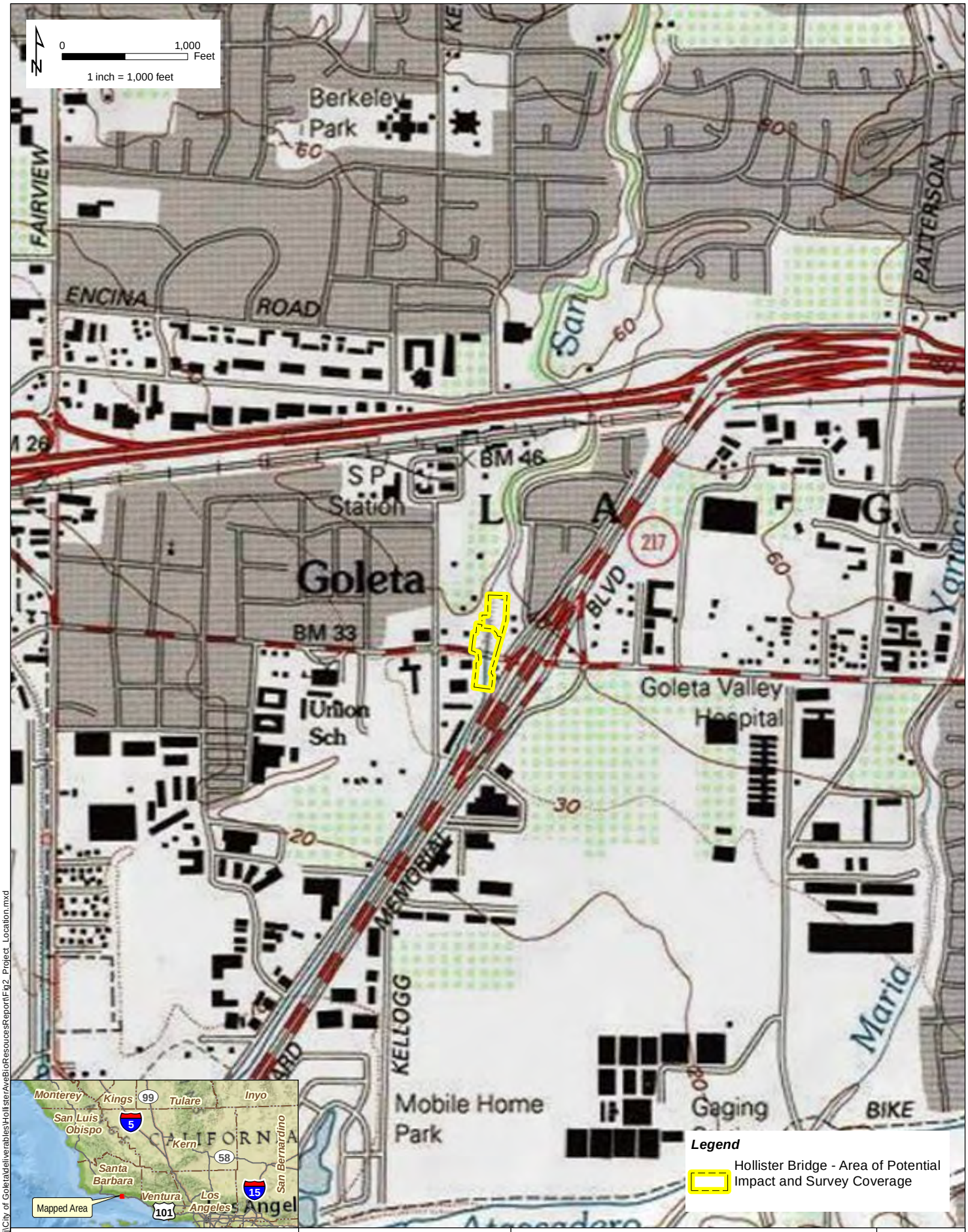

V:\Projects\GIS_Proj\City of Goleta\deliverables\HollisterAveBioResoucesReport\Fig2_Project_Location.mxd

Hollister Avenue
Bridge Replacement Project
City of Goleta, CA
05-SB-0-GLTA BRLS-5481 (013)

URS Corporation

Source: [1] Seamless, scanned images of United States Geological Survey (USGS) paper topographic 1:24,000 scale,Goleta Quad 1988, Copyright: 2013 National Geograpic Society, i-cubed.

Figure 2. PROJECT LOCATION AND SURVEY COVERAGE

2014

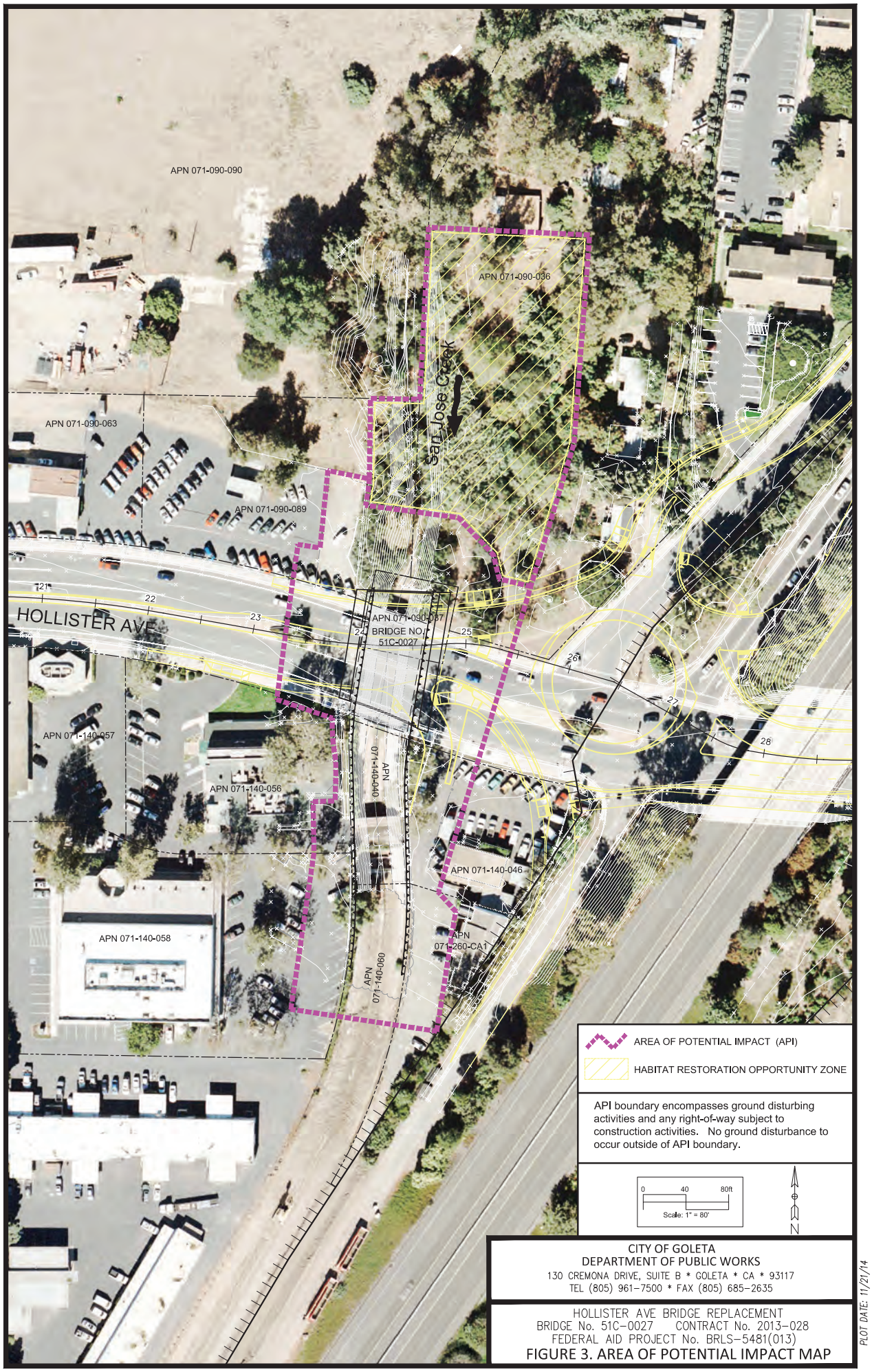

CITY OF GOLETA
DEPARTMENT OF PUBLIC WORKS
130 CREMONA DRIVE, SUITE B * GOLETA * CA * 93117
TEL (805) 961-7500 * FAX (805) 685-2635

HOLLISTER AVE BRIDGE REPLACEMENT
BRIDGE No. 51C-0027 CONTRACT No. 2013-028
FEDERAL AID PROJECT No. BRLS-5481(013)

FIGURE 3. AREA OF POTENTIAL IMPACT MAP

PLOT DATE: 11/21/14

APPENDIX H
EKWILL-FOWLER PS&E CONSTRUCTION PHASING TRAFFIC ANALYSIS

KITTELSON & ASSOCIATES, INC.
TRANSPORTATION ENGINEERING / PLANNING
428 J Street, Suite 500, Sacramento, CA 95814 P 916.266.2190 F 916.266.2195

MEMORANDUM

Date: March 7, 2014

Project #: 15612

To: Craig Drake, Drake Haglan & Associates

CC: Rosemarie Gaglione, City of Goleta

From: Jim Damkowitch, Chirag Safi

Project: Ekwill-Fowler PS&E

Subject: Construction Phasing Traffic Analysis

INTRODUCTION

This memorandum presents the operational implications of temporarily reducing westbound Hollister Avenue from two to one lane between Kellogg Avenue and State Route (SR) 217 northbound ramp/Ward Drive and closing the SR 217 southbound on-ramp at Hollister Avenue. The narrowing of westbound Hollister Avenue and closure of the SR 217 southbound on-ramp is required during two and four construction stages respectively for the Ekwill-Fowler and SR 217 roundabout improvement project. Hollister Avenue and SR 217 ramps are planned to operate with no lane closure during the remaining construction stages.

This traffic analysis examines the operational implications of the construction stages described above. This analysis includes documenting the potential traffic diversion and any resulting temporary traffic impacts. The construction year was assumed to be 2015. The construction is anticipated to last from six to nine months.

Fairview Avenue southbound off- and northbound on-ramps are anticipated to close for reconstruction at the same time as the Ekwill Fowler and SR 217 project. Traffic operational implications of concurrent construction schedule of these two projects were also evaluated.

The following nine intersections were scoped for analysis:

1. Hollister Avenue & Kellogg Avenue
2. Hollister Avenue & SR 217 SB Ramps
3. Hollister Avenue & SR 217 NB Ramps/Ward Drive
4. Hollister Avenue & St. Josephs Street

5. Hollister Avenue & Patterson Avenue
6. Fairview Avenue & US 101 SB Ramps
7. Fairview Avenue & US 101 NB Ramps
8. Patterson Avenue & US 101 SB Ramps
9. Patterson Avenue & US 101 SB Ramps

The memorandum documents: 1) development of the construction year (2015) baseline turning movements for intersections, 2) estimates of the traffic diversion at each intersection due to Ekwill Fowler and SR 217 construction project, 3) level of service and queuing analysis at each intersections with and without the project, 4) identify traffic related impacts and recommend temporary mitigation measures, and 5) evaluate traffic operations due to concurrent construction schedule with the Fairview Avenue ramp closures. The vicinity map showing the study intersections is provided in **Figure 1**.

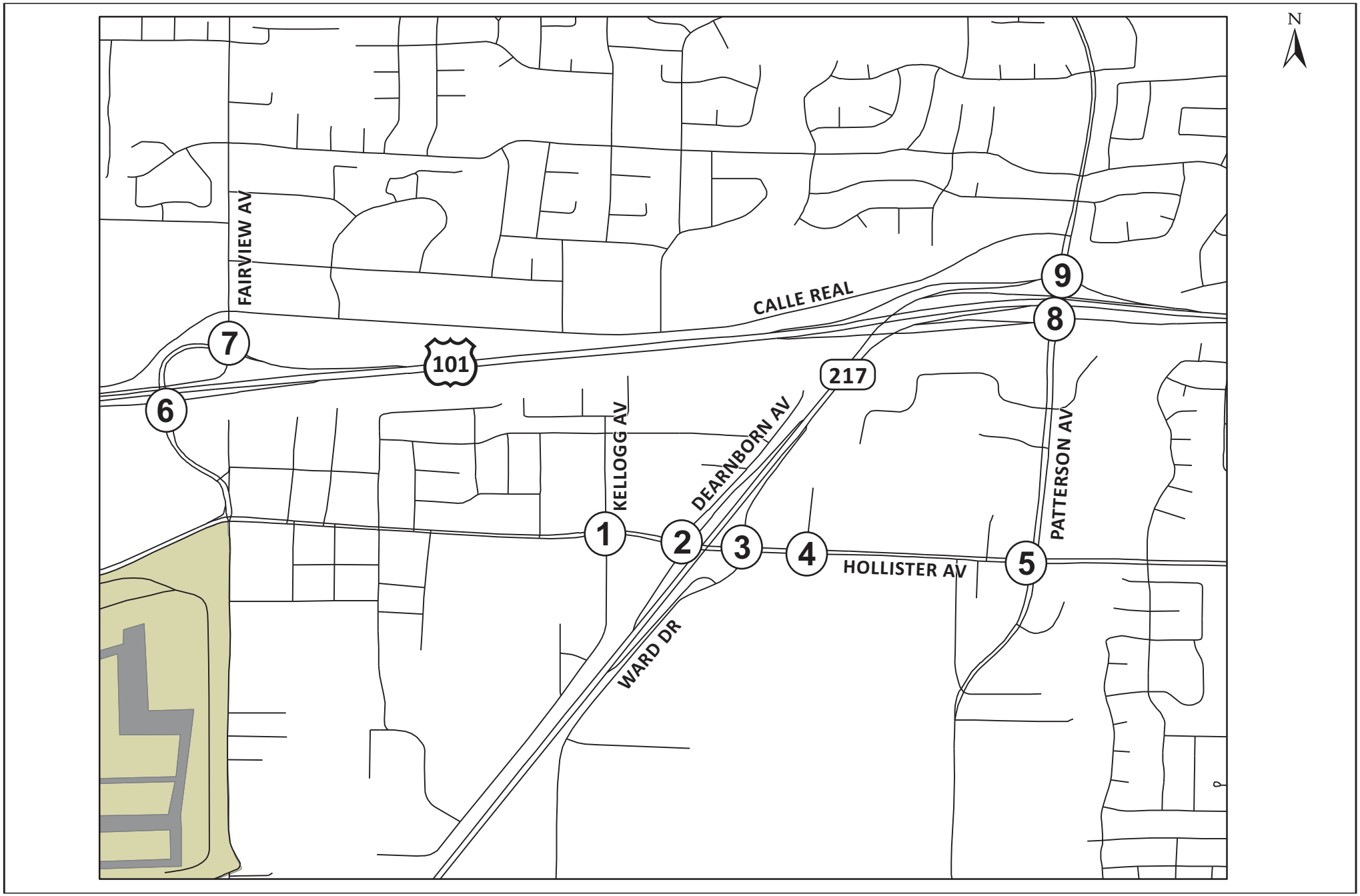

Site Vicinity

Figure 1

2015 BASELINE INTERSECTION TRAFFIC FORECASTS

Depending on availability of new (2012/2013) traffic counts, two methodologies were used to forecast future traffic at the study intersections. The AM/PM peak hour traffic forecasts at the following intersections were based on the *Ekwill Fowler Circulation Improvement Project Traffic Impact Analysis* (referred as "EF traffic study") prepared by RBF Consulting dated July 30, 2008.

- Hollister Avenue & Kellogg Avenue (#1)
- Hollister Avenue & SR 217 SB Ramps (#2)
- Hollister Avenue & SR 217 NB Ramps/Ward Drive (#3)
- Hollister Avenue & Patterson Avenue (#5)

The EF traffic study used 2003-2005 as base year and 2030 as a horizon year. The 2015 construction year turning movements were interpolated assuming linear growth between the EF traffic study base year and horizon year. Since the interpolation was performed using much older data, i.e. 2003-2005, the turning movements at the study intersections were checked against the traffic data collected in 2008-2010. Minor adjustments were made to make the 2015 forecasts to ensure none of the forecasts are lower than these counts.

New traffic counts were collected at the following intersections in 2013.

- Hollister Avenue & St. Josephs Street (#4)
- Fairview Avenue & US 101 SB Ramps (#6)
- Fairview Avenue & US 101 NB Ramps (#7)
- Patterson Avenue & US 101 SB Ramps (#8)
- Patterson Avenue & US 101 SB Ramps (#9)

The 2015 baseline turning movements at this intersection were estimated by growing the existing counts using a factor derived from the baseline and future year forecasts as contained in the EF traffic study.

Figure 2 shows the 2015 baseline turning movements for AM and PM peak hours with lane geometry at each study intersection. Right-turn-on-red (RTOR) counts are illustrated in **Figure 3**. The exhibits from the EF traffic study and count data are provided in **Attachment 1**.

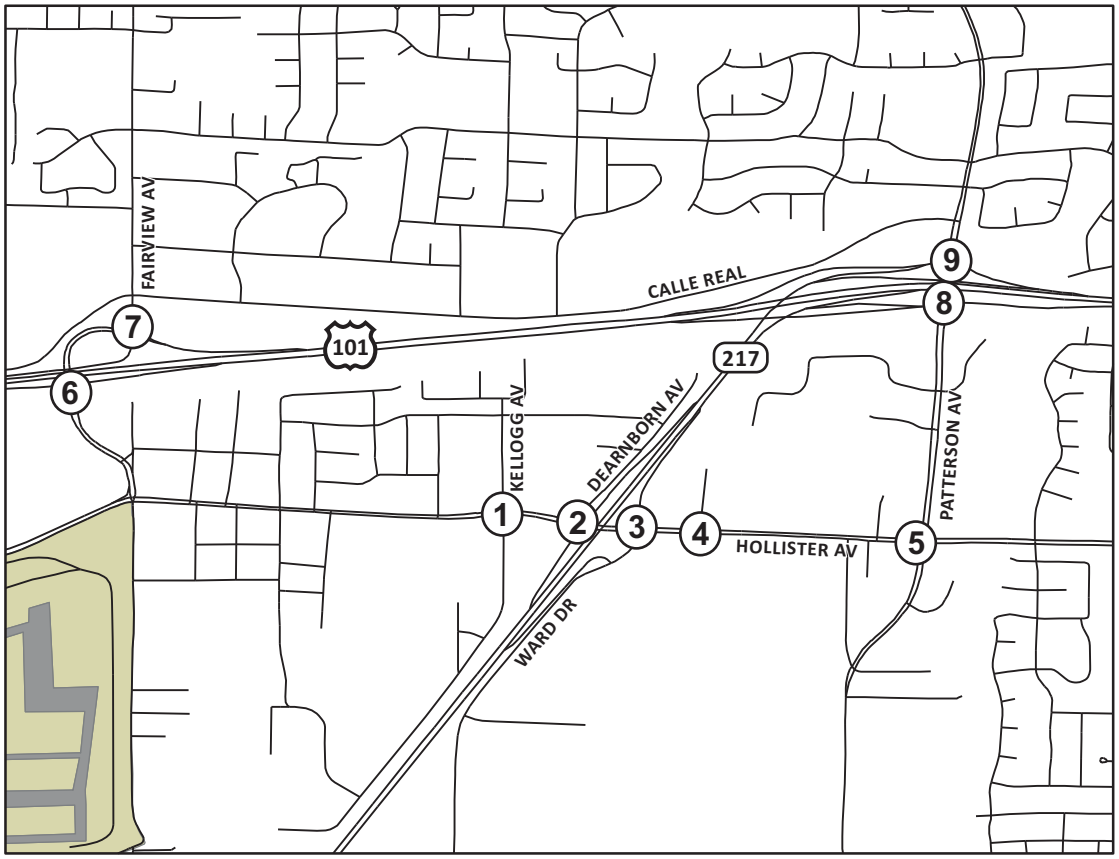

N

1 Kellogg Avenue/ Hollister Avenue

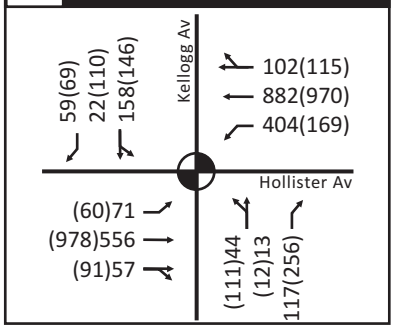

2 SR 217 SB Ramps/ Hollister Avenue

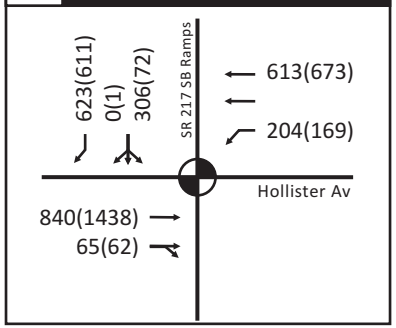

3 SR 217 NB Ramps/ Hollister Avenue

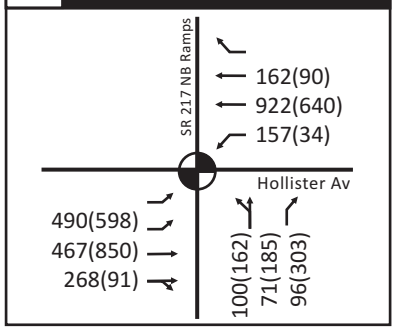

4 St. Joseph's Street/ Hollister Avenue

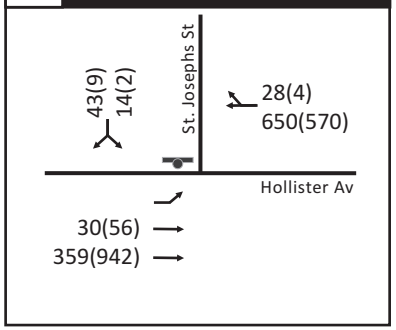

5 Patterson Avenue/ Hollister Avenue

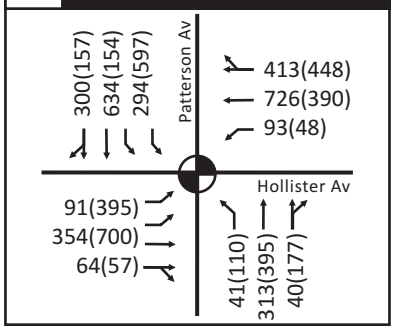

6 Fairview Ave/ US-101 SB Ramps

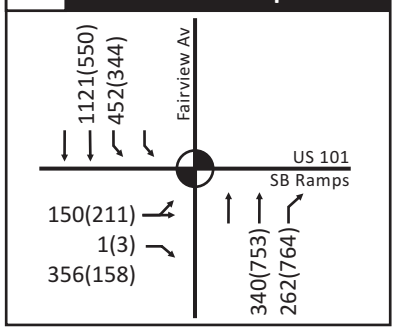

7 Fairview Ave/ US-101 NB Ramps

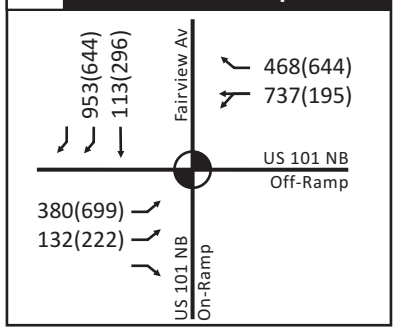

8 Patterson Ave/ US-101 SB Ramps

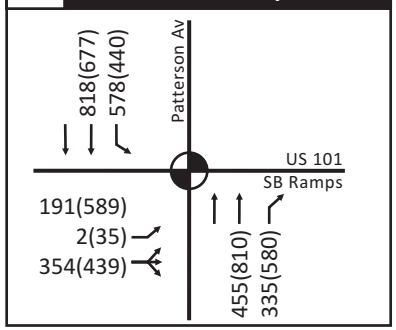

9 Patterson Ave/ US-101 NB Ramps

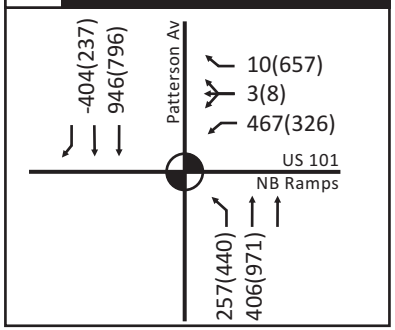

Legend

- Lanes/Movement
- Stop Sign
- Traffic Signal
- Roundabout

2015 Baseline
Turning Movement Volumes - AM(PM)

Figure
2

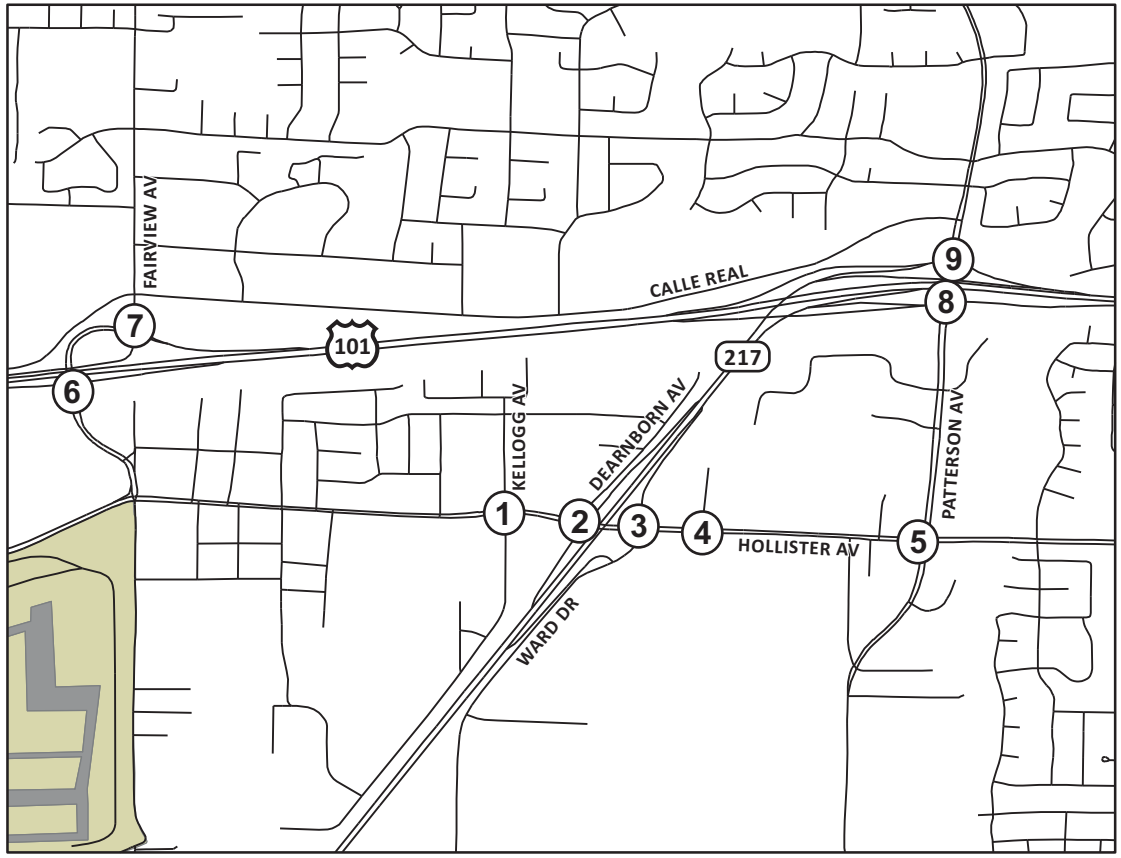

N

1 Kellogg Avenue/ Hollister Avenue

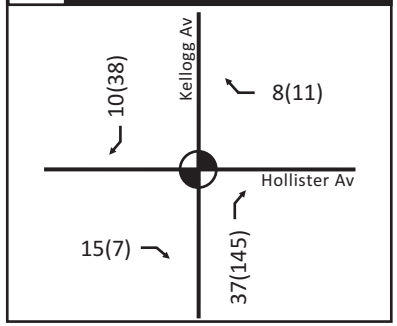

2 SR 217 SB Ramps/ Hollister Avenue

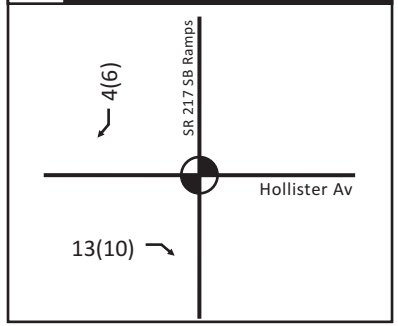

3 SR 217 NB Ramps/ Hollister Avenue

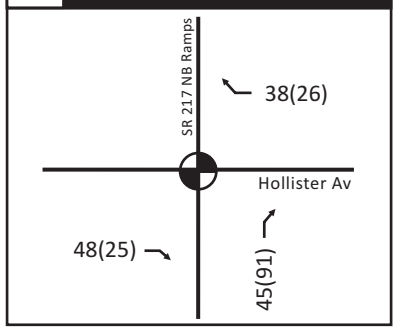

4 St. Joseph's Street/ Hollister Avenue

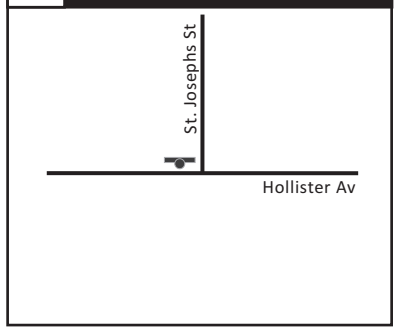

5 Patterson Avenue/ Hollister Avenue

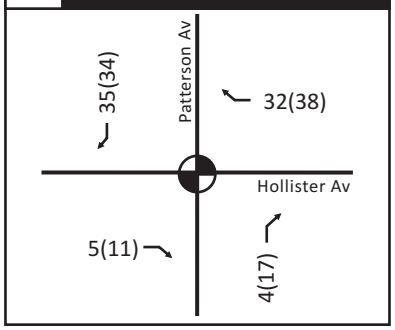

6 Fairview Ave/ US-101 SB Ramps

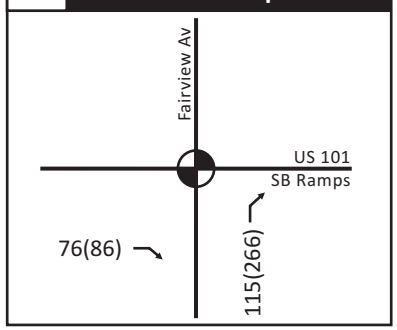

7 Fairview Ave/ US-101 NB Ramps

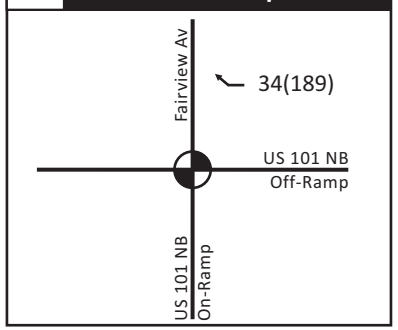

8 Patterson Ave/ US-101 SB Ramps

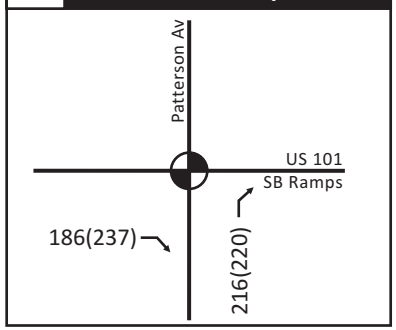

9 Patterson Ave/ US-101 NB Ramps

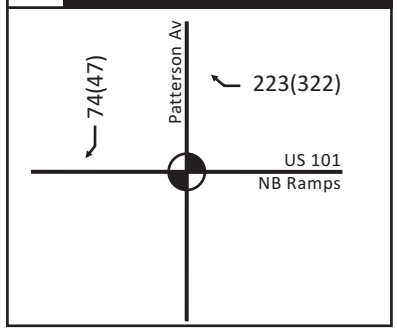

Legend

- Lanes/Movement
- Stop Sign
- Traffic Signal
- Roundabout

Right Turn on Red
Turning Movement Volumes - AM(PM)

Figure
3

TRAFFIC ANALYSIS METHODOLOGY AND ASSUMPTIONS

Signalized intersection Level of Service (LOS) calculations performed for this analysis use both the Highway Capacity Manual (HCM) 2000 methodology and the Intersection Capacity Utilization (ICU) method[1]. All HCM LOS calculations were conducted using the SYNCHRO-8 software. ICU LOS calculations were performed using the TRAFFIX® software developed by Dowling Associates. SIDRA was used for roundabout analysis.

Caltrans requires that signalized Intersections be analyzed using the operational analysis methodology of the HCM 2000 as implemented in the Highway Capacity Software, the TRAFFIX™ software, or the SYNCHRO-8 software. Caltrans endeavors to maintain a target LOS at the transition between LOS C and LOS D on State highway facilities, however, Caltrans acknowledges that this may not always be feasible and recommends that the lead agency consult with Caltrans to determine the appropriate target LOS.

The ICU method calculates an intersection's LOS by taking the sum of each pair of intersection critical movements (movements that compete for the same space within the intersection) and dividing that value by the intersections saturation flow rate (capacity). The saturation flow rate assumed for all City intersections is 1,600 vehicles per lane per hour. Each critical movement's volume to capacity ratio is then summed and a 10 percent lost time adjustment is added to yield a peak hour volume to capacity ratio that is the basis for determining the intersection's LOS.

Right-turn-on-red (RTOR) movements are not factored when determining LOS given that these are considered non-conflicting turning movements. The Hollister Avenue narrowing may reduce or add right-turn volume at the intersection. In order to reflect the reasonable case, absolute or percentage RTOR counts were discounted from the right-turn at the study intersections under both baseline and the Hollister Avenue narrowing conditions.

Roundabout analysis was performed using the SIDRA software package. The critical and follow-up headway values were used from the Caltrans publication *Roundabout Geometric Design Guidance*, June 2007. The critical and follow-up headways for the single lane roundabout are assumed to be 4.8 and 2.5 seconds respectively.

The worse movement delay criterion is used to determine the LOS at stop-controlled intersections based on the HCM 2000 method. Delay and V/C criteria for signalized and stop-controlled intersection LOS is presented in **Attachment 2**.

[1] The ICU method was adopted as the countywide LOS methodology for signalized intersections by the SBCAG in 2002.

Significance Criteria

Construction year 2015 operational deficiencies were identified based on the State and City's level of service standard of LOS C. The level of service standard is consistent with the adopted City of Goleta General Plan / Coastal Land Use Plan.

All city-operated study intersections analyzed herein were evaluated against the City's LOS C goal to determine the significance of peak hour traffic delays and the significance of project impacts. The City of Goleta's project impact significance criteria is as follows:

- For signalized intersections operating at or below LOS C (HCM and ICU Method), if the with-project condition causes the location to exceed LOS C, it is considered an impact.
- For non-signalized intersections operating at or below LOS C (HCM Method), if the with-project condition causes the location to exceed LOS C, it is considered an impact.
- For non-signalized intersections operating above HCM LOS C, if peak hour traffic signal warrants are not met then such cases should be deferred to the City's traffic engineer.
- For intersections operating at LOS D (HCM method), the addition of 15 or more peak hour trips.
- For intersections operating at LOS E (HCM method), the addition of 10 or more peak hour trips.
- For intersections operating at LOS F (HCM method), the addition of 5 or more peak hour trips.

For state operated facilities shown to operate at HCM LOS D or worse under the baseline that remain at LOS D or worse under construction conditions - the following CMP criteria were used to define impacts:

LOS	Added Peak Trips
D	20
E	10
F	10

2015 BASELINE INTERSECTION OPERATIONS

Table 1 shows that the following three intersections are projected to exceed the City or State's LOS thresholds by 2015:

- Hollister Avenue & SR 217 SB Ramps (#2) – This state operated intersection is projected to operate at HCM LOS D during both peak hours, thus exceeding the State's criteria.
- Hollister Avenue and Patterson Avenue (#5) – This city operated intersection would operate at ICU LOS D during the PM Peak hour, and thus exceed the city's criteria.

- Patterson Avenue and US 101 SB Ramps (#8) – This state operated intersection would operate at HCM LOS D during the PM peak hour and exceed the State's threshold criteria.

Table 2 illustrates the 95th percentile queues at the study intersections. The available storage for the turn movements was estimated from the readily available aerials. The storage for the through lane reflects the distance from the upstream signalized or unsignalized intersection. The estimated 95th percentile queues are anticipated to exceed the available storage at the following locations:

- Hollister Avenue & Kellogg Avenue (#1) – westbound left-turn lane in the AM peak
- Hollister Avenue & SR 217 SB ramps (#2) – eastbound through during the PM peak and westbound left-turn lane during both peak hours
- Hollister Avenue & SR 217 NB Ramps/Ward Drive (#3) – eastbound left-turn lane during both peak hours
- Hollister Avenue & Patterson Avenue (#5) – eastbound left-turn, eastbound through and southbound left-turn during the PM peak hour
- Fairview Avenue & US 101 SB Ramps (#6) – northbound right-turn lane in the PM peak
- Fairview Avenue & US 101 NB Ramps (#7) – westbound through and right-turn lane in the AM peak
- Patterson Avenue & US 101 SB Ramps (#8) – northbound right-turn lane and southbound left-turn lane during the PM peak
- Patterson Avenue & US 101 NB Ramps (#9) – westbound left and right-turn lanes, and southbound through and right-turn lanes in both peaks.

The **Attachment 3** provides the LOS and queuing analysis worksheets.

Table 1: Level of Service Analysis Results – 2015 Baseline

#	Intersection	Control	Peak Hour	2015 Baseline	
				Delay OR V/C [4]	Level of Service
1	Hollister Ave & Kellogg Ave [1]	Signal	AM	*0.70*	*B*
			PM	*0.69*	*B*
2	Hollister Ave & SR 217 SB Ramps [2]	Signal/RAB [3]	AM	35.5	**D**
			PM	41.8	**D**
3	Hollister Ave & SR 217 NB Ramps [2]	Signal/RAB [3]	AM	26.9	C
			PM	32.1	C
4	Hollister Ave & St. Josephs [1]	TWSC	AM	14.5	B
			PM	12.7	B
5	Hollister Ave & Patterson Ave [1]	Signal	AM	*0.78*	*C*
			PM	*0.84*	***D***
6	Fairview Avenue & US 101 SB Ramps [2]	Signal	AM	14.4	B
			PM	17.5	B
7	Fairview Avenue & US 101 NB Ramps [2]	Signal	AM	30.4	C
			PM	18.7	B
8	Patterson Avenue & US 101 SB Ramps [2]	Signal	AM	23.3	C
			PM	42.3	**D**
9	Patterson Avenue & US 101 NB Ramps [2]	Signal	AM	24.3	C
			PM	27.9	C

LOS exceeds City or State threshold

RAB = Roundabout, TWSC = Two Way Stop Control

1 Indicates city operated intersection. City threshold criteria applies to identify impacts

2 Indicates state operated intersection. State threshold criteria applies to identify impacts

3 Intersection control is signal in baseline, but transition from signal to roundabout depending on stage of construction

4 For signalized intersections, average volume to capacity ratio (v/c) and LOS is reported following ICU analysis methodology. For side-street stop controlled intersections, the delay (seconds/vehicle) and LOS for the worse movement is shown following 2000 HCM analysis methodology. V/C values are shown in *italics*.

Source: Kittelson & Associates, 2013

Table 2: Queue Analysis Results – 2015 Baseline

#	Intersection	Control	Estimated Available Storage	95th Percentile Queues (ft)	
				AM Peak	PM Peak
1	Hollister Ave & Kellogg Ave	Signal			
	EBL		145	94	84
	EBT		460	282	405
	WBL		185	361	146
	WBT		580	251	275
	NBT		1,000	66	135
	NBR		220	84	111
	SBT		1,000	183	167
	SBR		125	57	41
2	Hollister Ave & SR 217 SB Ramps	Signal			
	EBT		580	319	675
	WBL		120	270	264
	WBT		350	174	32
	SBT		800	529	449
	SBR		800	504	435
3	Hollister Ave & SR 217 NB Ramps	Signal			
	EBL		175	207	232
	EBT		350	318	292
	WBL		200	163	56
	WBT		440	358	280
	WBR		135	100	71
	NBT		300	175	309
	NBR		300	63	189
4	Hollister Ave & St. Josephs	TWSC			
	EBL		125	25	25
	SBLR		1,000	25	25
5	Hollister Ave & Patterson Ave	Signal			
	EBL		155	68	273
	EBT		300	180	354
	WBL		145	135	82
	WBT		820	598	470
	NBL		160	75	153
	NBT		560	181	324
	SBL		175	170	365
	SBT		1,000	492	134
6	Fairview Avenue & US 101 SB Ramps	Signal			
	EBLT		720	104	222
	EBR		270	199	86
	NBT		860	122	227
	NBR		170	123	387
	SBL		320	155	171
	SBT		920	266	85

7	Fairview Avenue & US 101 NB Ramps	Signal			
	EBL		920	244	246
	WBT		760	871	182
	WBR		250	324	300
	SBT		300	214	274
8	Patterson Avenue & US 101 SB Ramps	Signal			
	EBL		770	173	477
	EBLTR		770	212	458
	NBT		780	191	375
	NBR		230	117	401
	SBL		385	375	475
	SBT		385	162	265
9	Patterson Avenue & US 101 NB Ramps	Signal			
	WBL		180	224	235
	WBLTR		826	241	264
	WBR		180	94	241
	NBL		385	158	258
	NBT		385	0	88
	SBT		300	334	325
	SBR		150	323	167

TWSC = Two Way Stop Control
Red highlighted values indicate queues exceed storage
Source: Kittelson & Associates, 2013

TRAFFIC DIVERSION

This section describes the travel forecasts developed to estimate the extent of traffic diversion caused by the narrowing of Hollister Avenue from four-lane to three-lane and SR 217 southbound on ramp closure. The Goleta Travel Model was the primary tool for estimating the extent of traffic diversion.

Goleta Travel Model

The VISUM Goleta Travel Model is an analysis tool that gives the City of Goleta the capability to generate technical information pertinent to the understanding of travel behavior and transportation network performance within the City. The Goleta Travel Model was calibrated/validated by PTV America in August 2005. Projected land use assumptions were developed by the City of Goleta and reflect all pending and approved development projects within the City of Goleta and within the unincorporated areas of the Goleta Valley. The City's Cumulative Traffic Model has been tracked and maintained on an on-going basis since 2005.

Planning Horizon Land Use Assumptions

Land use assumptions within Goleta City Limits are based on all pending and approved development projects within the City of Goleta and within the unincorporated areas of the Goleta Valley. The latter reflects the County of Santa Barbara's cumulative residential and non-residential project list; the University of California at Santa Barbara Long Range Plan; and, the City of Santa Barbara's Santa Barbara Airport Master Plan. These data are geo-coded by TAZ for modeling purposes.

Planning Horizon External Traffic Assumptions

External traffic growth assumptions for the City's Cumulative Model reflect 2035 conditions. For state highway facilities, external growth assumptions were based on historical traffic growth while external assumptions for non-state facilities were based on historical traffic growth and future land use considerations (i.e., potential to be impacted by future development). The following external link traffic growth assumptions are reflected in the 2035 Goleta Travel Model. These external growth assumptions were interpolated (2005 – 2035) to reflect 2015 future year conditions for this analysis.

- SR-154 32% Growth
- SR-192/Cathedral Oaks 20% Growth
- State Street 20% Growth
- Calle Real (East) 20% Growth
- Highway 101 (East) 35% Growth
- Modoc Drive 20% Growth
- Las Palmas Drive 40% Growth
- Highway 101 (West) 50% Growth
- Calle Real (West) 50% Growth

Traffic Volume Deltas

To quantify the impact of the westbound Hollister Avenue lane reduction and SR 217 southbound on ramp closure, the Goleta travel demand model was run with and without the these changes. Difference plots were created and used to compute turning movement count adjustments during the weekday AM and PM peak hours. The raw volume difference plots are provide in **Attachment 4**.

The AM and PM peak distribution of diverted traffic for the westbound Hollister Avenue lane reduction is provided in **Figure 4** and **Figure 5** respectively. **Figure 6** and **Figure 7** show the distribution of diverted traffic due to closure of SR 217 southbound on-ramp in the AM and PM Peak hours respectively. These respective diversion distributions have been superimposed onto the volume difference plot that shows the circulation impact of construction scenario. The links/roadways that carry less traffic as a result loss of lanes on Hollister Avenue will show as green bands while roadway forecasted to carry more traffic appear as red bands. While color denotes the direction of change, link bandwidths provide an indication of the magnitude of the volume difference between baseline and construction scenario.

AM/PM peak hour traffic diversion results for the westbound Hollister Avenue lane reduction and SR 217 southbound on ramp closure are provided in **Figure 8** for the AM and PM peak hours. Negative (denoted as green) and positive (denoted as red) changes in peak hour traffic volumes resulting from a given construction scenario relative to the 2015 baseline roadway network are provided.

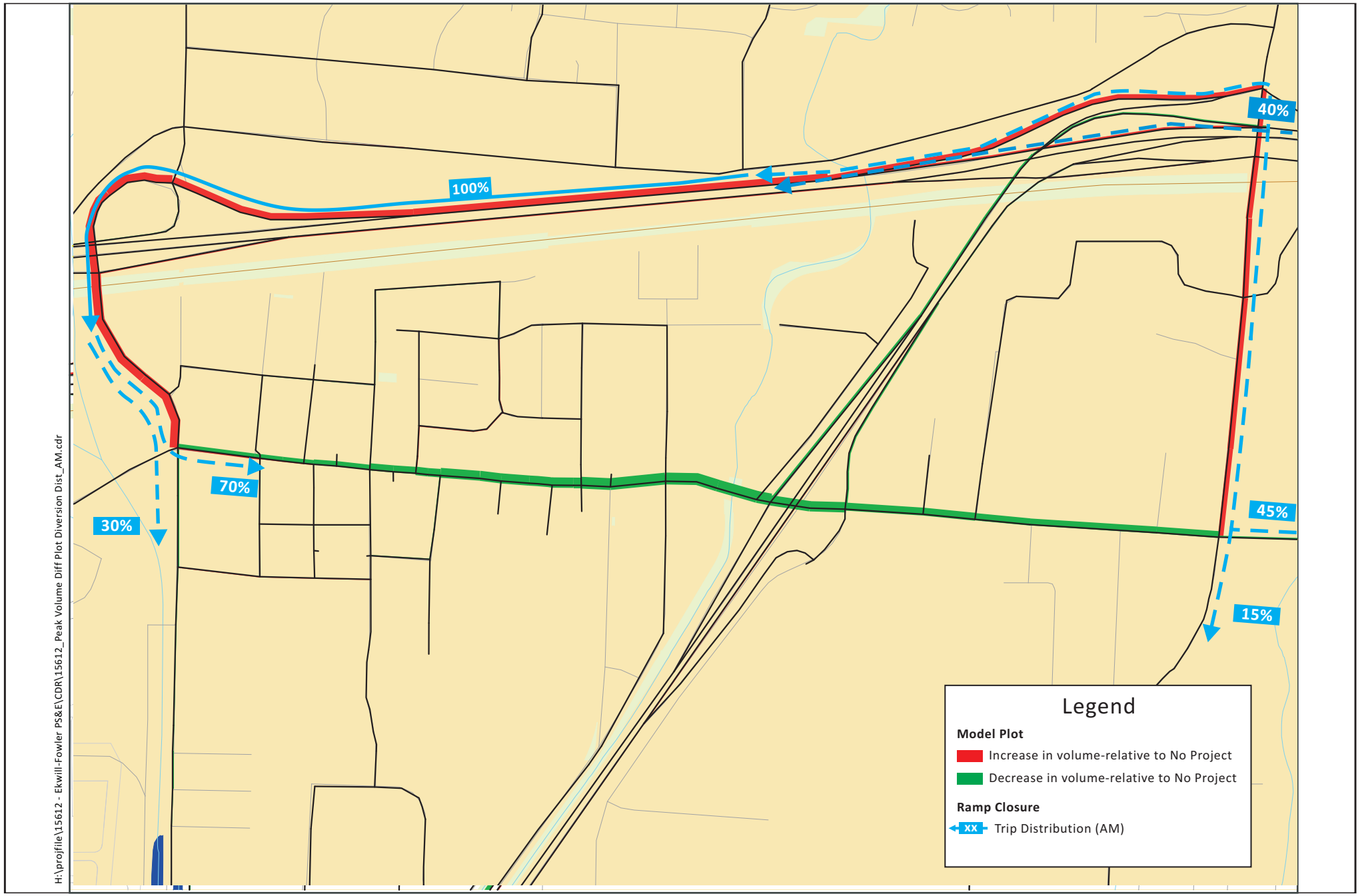

2015 Peak Hour Construction Phasing: Hollister Ave - Two Lanes vs Four Lanes (Kellogg to St. Josephs Street)
Peak Volume Difference Plot and Diversion Distribution - AM

Figure 4

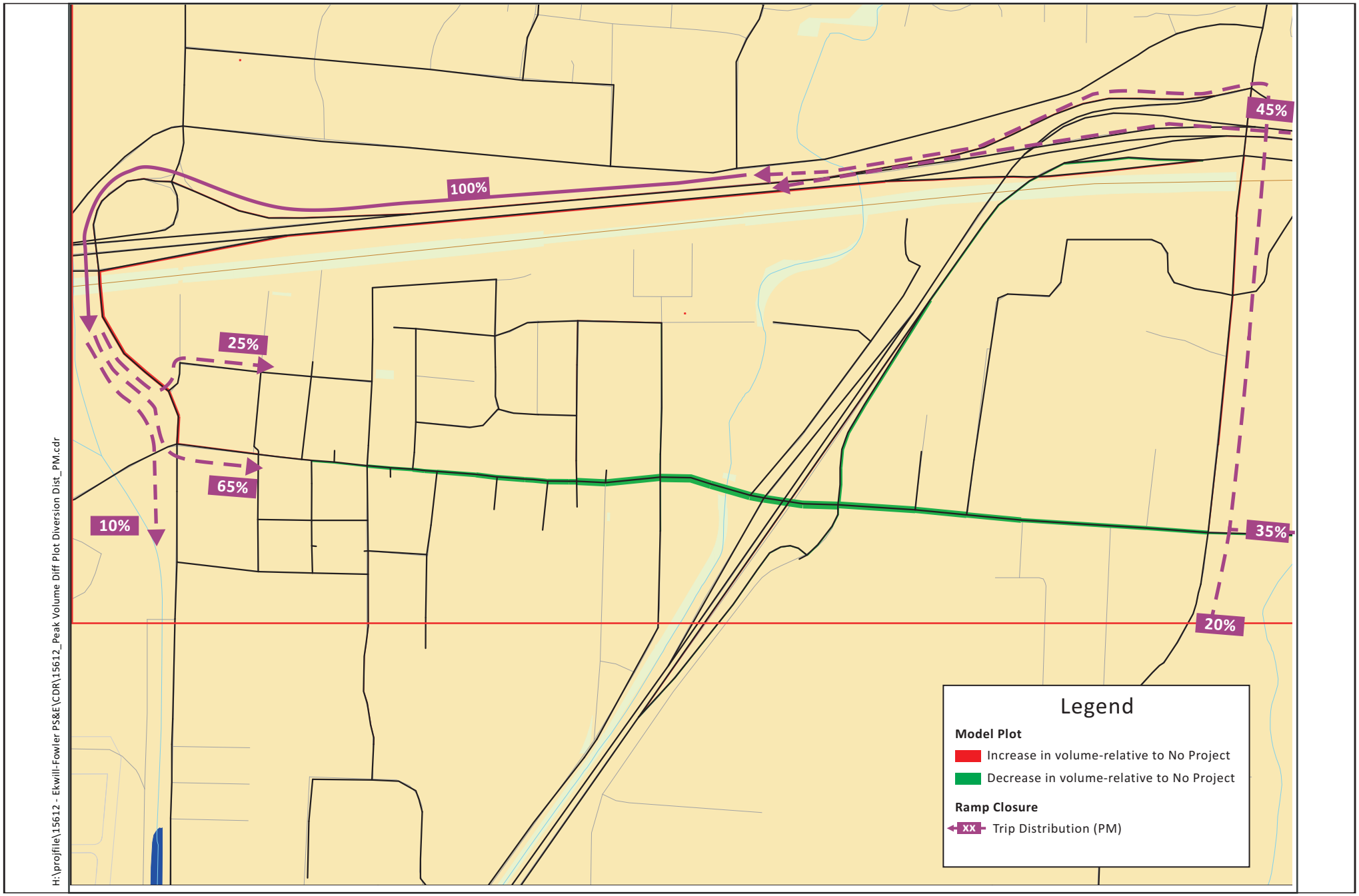

2015 Peak Hour Construction Phasing: Hollister Ave - Four Lanes vs. Three Lanes (2EB1WB)
Peak Volume Difference Plot and Diversion Distribution - PM

Figure
5

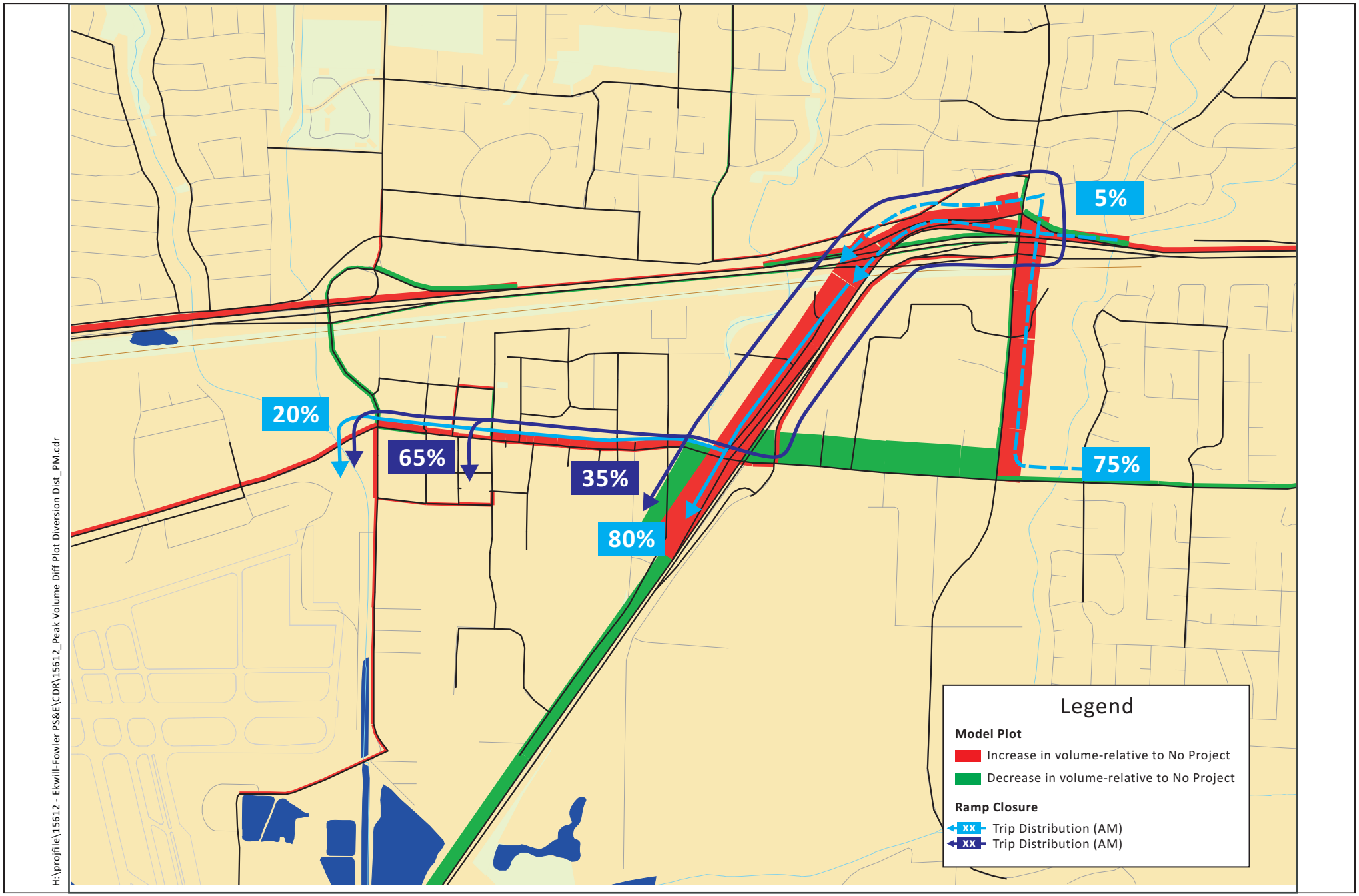

2015 Peak Hour Construction Phasing: Hollister Ave – SR 217 SB on-ramp open vs. closed
Peak Volume Difference Plot and Diversion Distribution - AM

Figure
6

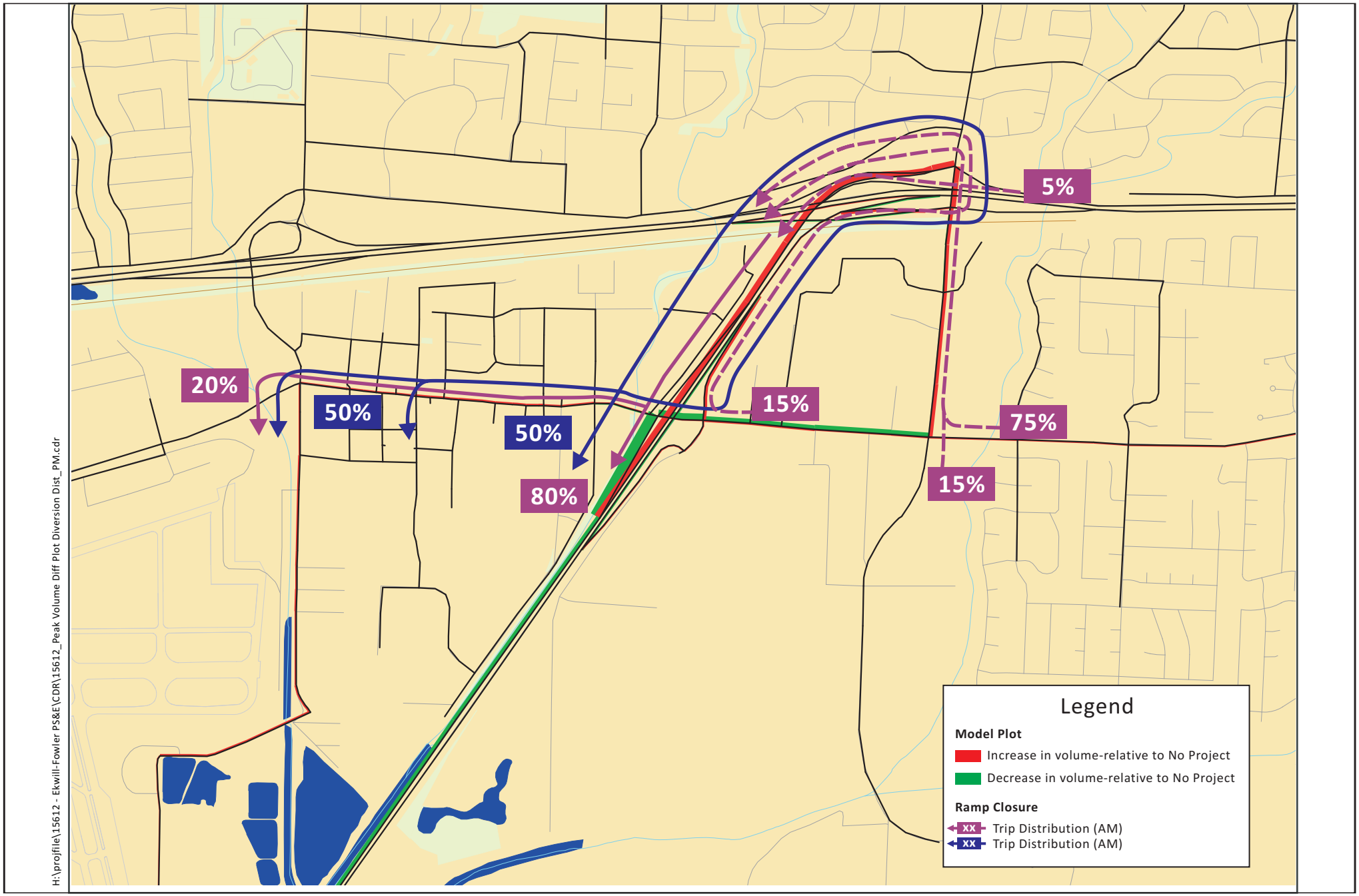

2015 Peak Hour Construction Phasing: SR 217 SB on-ramp open vs. closed
Peak Volume Difference Plot and Diversion Distribution - PM

Figure
7

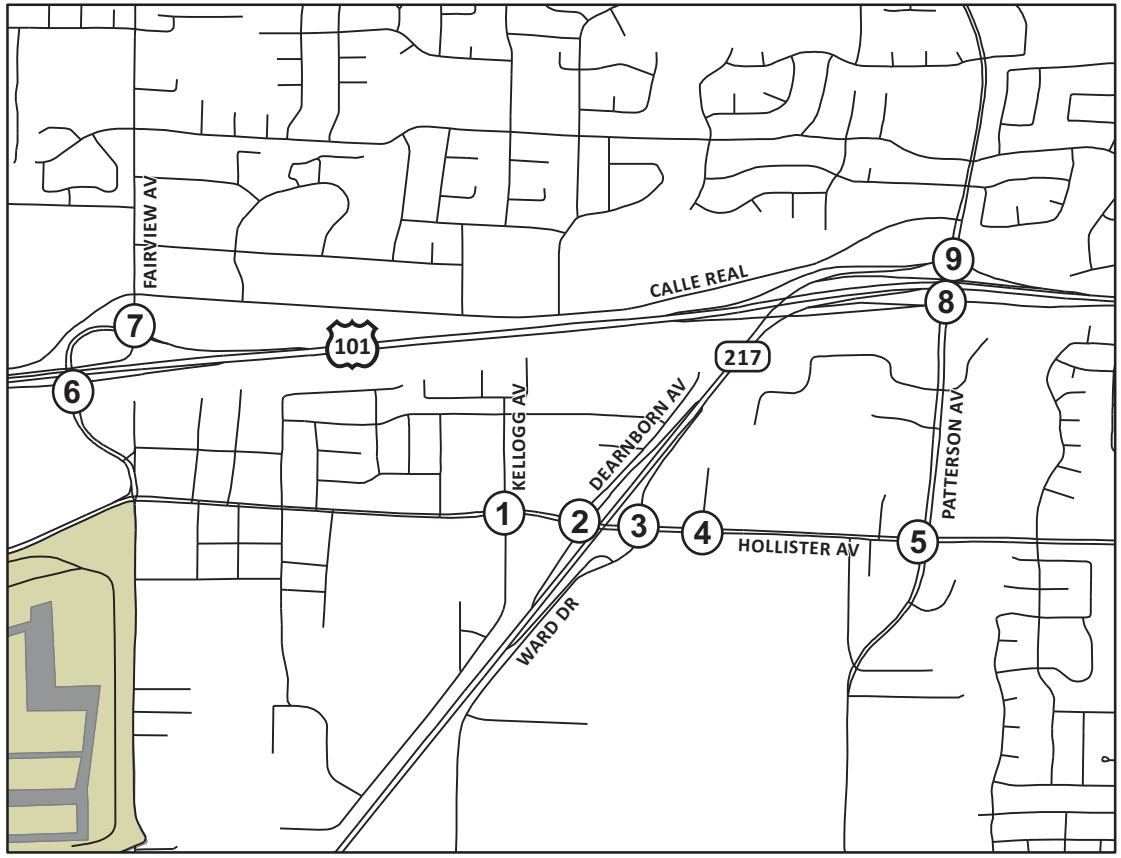

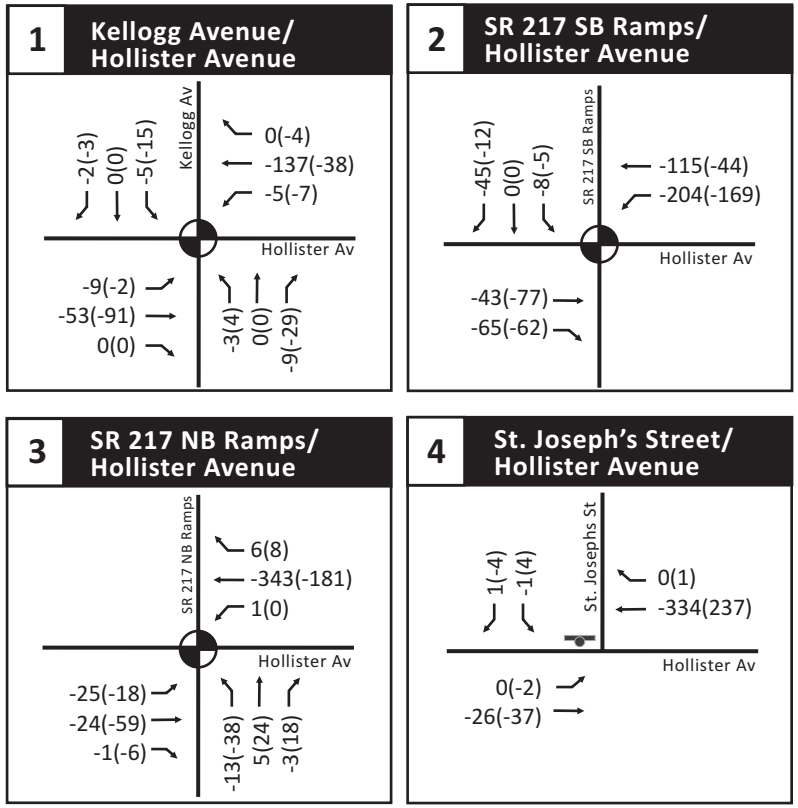

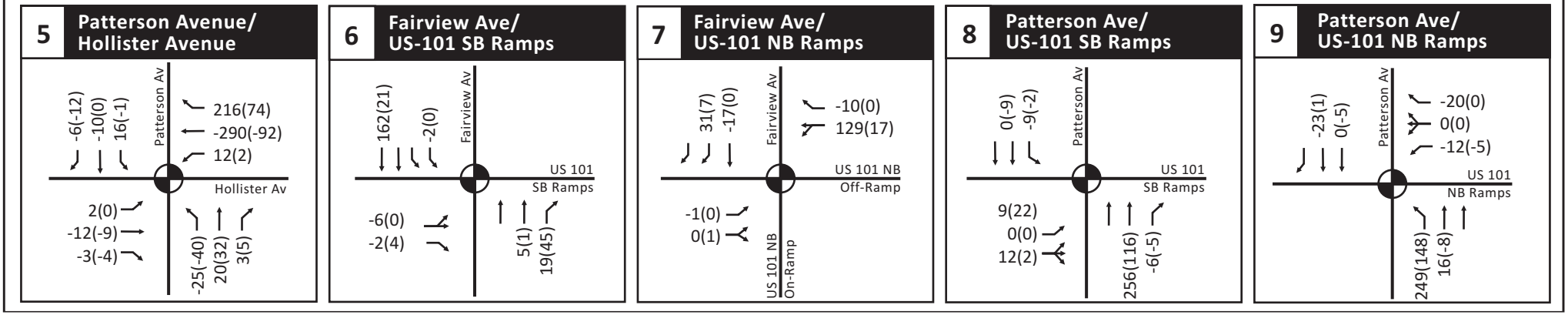

Legend

- Lanes/Movement
- Stop Sign
- Traffic Signal
- Roundabout

Peak Hour Volume Deltas – Three Lane Hollister and SR 217 SB on ramp closed
Turning Movement Volumes - AM(PM)

Figure 8

2015 TRAFFIC FORECATS DURING EKWILL FOWLER AND SR 217 ROUNDABOUT CONSTRUCTION

Based on the traffic diversions as illustrated in the **Figure 8** and 2015 baseline turning movement forecasts, the 2015 peak hour turning movements for the construction closure were developed. AM/PM peak hour turning movements with the intersection control type and geometry are provided in **Figure 9**.

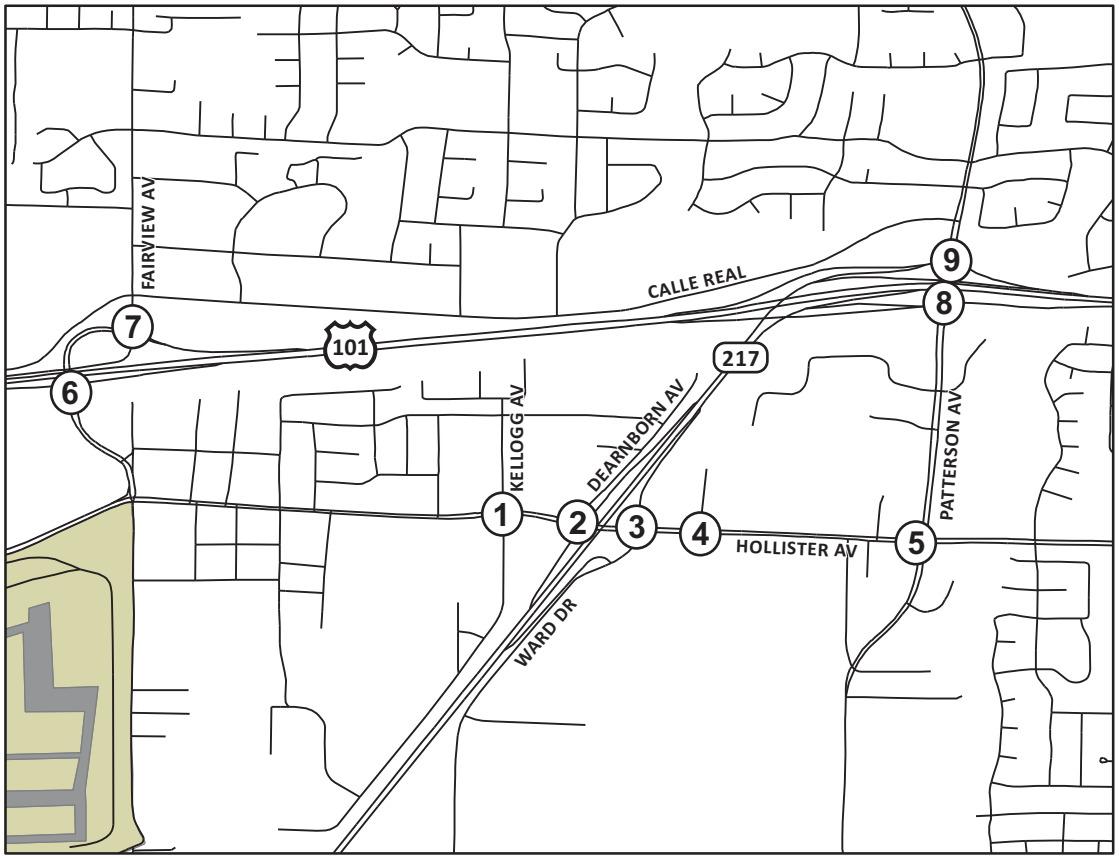

N

1 Kellogg Avenue/ Hollister Avenue

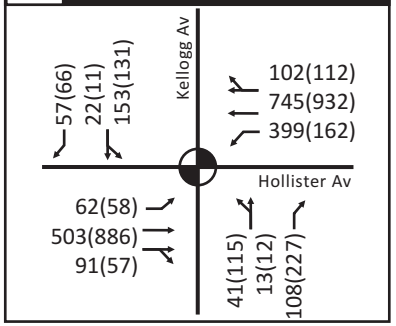

2 SR 217 SB Ramps/ Hollister Avenue

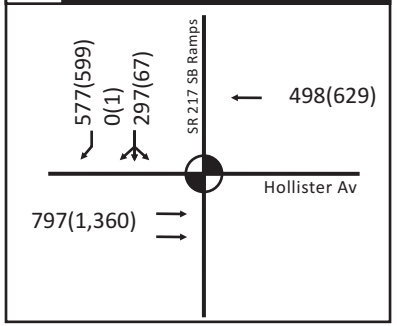

3 SR 217 NB Ramps/ Hollister Avenue

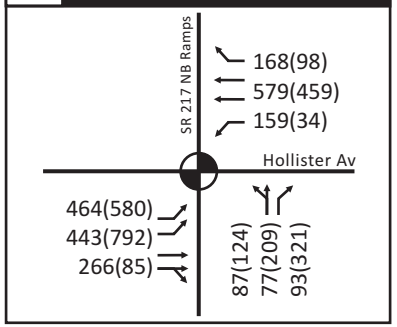

4 St. Joseph's Street/ Hollister Avenue

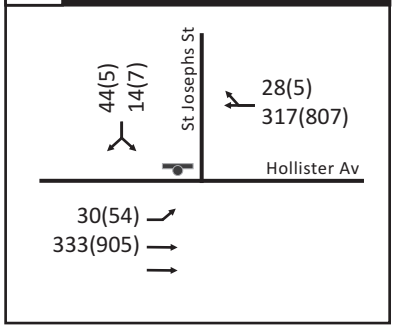

5 Patterson Avenue/ Hollister Avenue

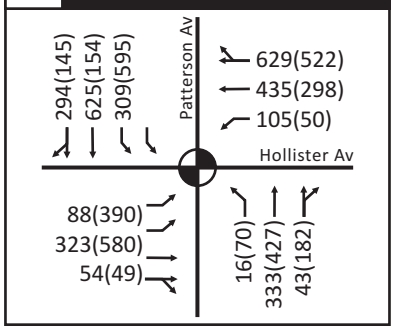

6 Fairview Ave/ US-101 SB Ramps

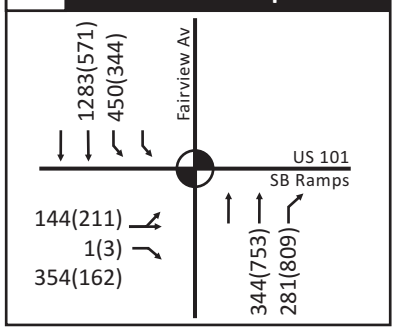

7 Fairview Ave/ US-101 NB Ramps

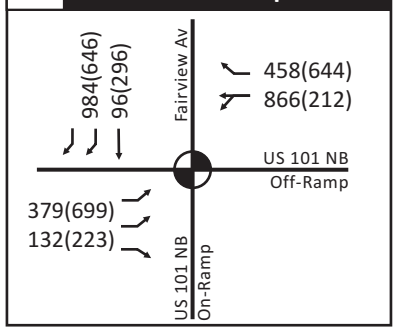

8 Patterson Ave/ US-101 SB Ramps

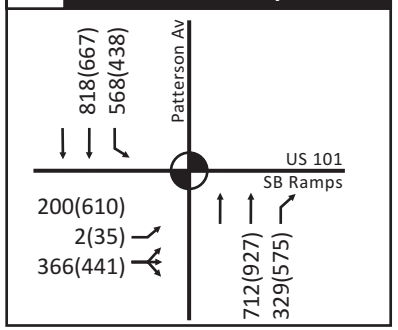

9 Patterson Ave/ US-101 NB Ramps

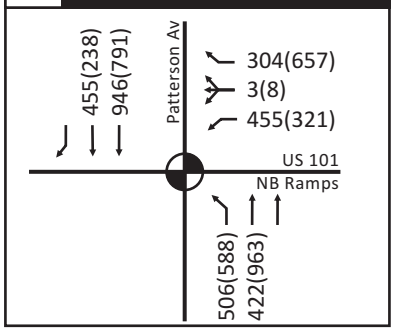

Legend

- Lanes/Movement
- Stop Sign
- Traffic Signal
- Roundabout

2015 During Construction
Turning Movement Volumes - AM(PM)

Figure 9

2015 INTERSECTION OPERATIONS DURING EKWILL FOWLER AND SR 217 ROUNDABOUT CONSTRUCTION

To calculate AM/PM peak hour intersection LOS, 2015 turning movements during the construction were input into the appropriate intersection operational analysis software. As mentioned previously, RTOR counts were discounted from the forecast right-turns at the intersections. For the HCM analysis, the signal timings at all signalized intersections were optimized using SYNCHRO-8 program. Given the SR 217 ramp intersections with Hollister Avenue would transition from signalized control to roundabouts during construction, both traffic controls were analyzed.

Table 3 shows that a number of study intersections would exceed the City and State's LOS threshold. The synopsis of the operational analysis result at each study intersection is provided below:

- Hollister Avenue & SR 217 SB Ramps/Ward Drive (#3) – For the roundabout control, HCM LOS degrades from "C" or better to "D" during the PM peak hour. This is considered a temporary impact during the construction schedule.
- Hollister Avenue & Patterson Avenue (#5) – Volume to capacity ratio at this City operated intersection degrades from 0.84 to 0.90 in the PM peak, although ICU LOS remains the same ("D"). The PM peak hour traffic at this intersection was estimated to decrease during construction activities. However, diversion due to construction would add traffic to the critical movements, resulting in V/C degradation. Therefore, this is not even considered as a temporary impact.
- Fairview Avenue & US 101 NB Ramps (#7) – HCM LOS degrades from acceptable "C" to unacceptable "D" during the AM peak. Addition of 133 AM peak hour trips due to diversion result in deficient operations. This is considered a temporary impact during the construction schedule.
- Patterson Avenue & US 101 SB Ramps (#8) – At LOD D, delay increased by 3.4 seconds due to additional of 124 trips during the PM peak hour. This is considered a temporary impact during the construction schedule.

Table 3: 2015 Level of Service Analysis Results during Construction

#	Intersection	Control	Peak Hour	2015 Baseline		2015 with Ekwill-Fowler & SR 217 Construction	
				Delay OR V/C [4]	Level of Service	Delay OR V/C [4]	Level of Service
1	Hollister Ave & Kellogg Ave [1]	Signal	AM	*0.70*	*B*	*0.67*	*B*
			PM	*0.69*	*B*	*0.66*	*B*
2	Hollister Ave & SR 217 SB Ramps [2]	Signal/RAB [3]	AM	35.5	**D**	24.7/13.1	C/B
			PM	41.8	**D**	16.8/21.0	B/C
3	Hollister Ave & SR 217 NB Ramps [2]	Signal/RAB [3]	AM	26.9	C	25.8/13.1	C/B
			PM	32.1	C	32/40.4	C/D
4	Hollister Ave & St. Josephs [1]	TWSC	AM	14.5	B	10.9	B
			PM	12.7	B	24.3	C
5	Hollister Ave & Patterson Ave [1]	Signal	AM	*0.78*	*C*	*0.76*	*C*
			PM	*0.84*	***D***	*0.90*	***D***
6	Fairview Avenue & US 101 SB Ramps [2]	Signal	AM	14.4	B	15	B
			PM	17.5	B	18.1	B
7	Fairview Avenue & US 101 NB Ramps [2]	Signal	AM	30.4	C	45.7	**D**
			PM	18.7	B	19.2	B
8	Patterson Avenue & US 101 SB Ramps [2]	Signal	AM	23.3	C	23.6	C
			PM	42.3	**D**	45.7	**D**
9	Patterson Avenue & US 101 NB Ramps [2]	Signal	AM	24.3	C	32.6	C
			PM	27.9	C	31.4	C

LOS exceeds City or State threshold

RAB = Roundabout, TWSC = Two Way Stop Control

1 Indicates city operated intersection. City threshold criteria applies to identify impacts

2 Indicates state operated intersection. State threshold criteria applies to identify impacts

3 Intersection control is signal in baseline, but transition from signal to roundabout depending on stage of construction

4 For signalized intersections, average volume to capacity ratio (v/c) and LOS is reported following ICU analysis methodology. For side-street stop controlled intersections, the delay (seconds/vehicle) and LOS for the worse movement is shown following 2000 HCM analysis methodology. V/C values are shown in *italics*.

Source: Kittelson & Associates, 2013

Table 4 illustrates the 95th percentile queues at the study intersections. The available storage for the turn movements was estimated from the readily available aerials. The storage for the through lane reflects the distance from the upstream signalized or unsignalized intersection. In addition to the locations where the 95th percentile queues are projected to exceed the storage under the 2015 baseline conditions, the following locations are anticipated to experience insufficient storage:

- Patterson Avenue & US 101 SB Ramps (#8) – southbound left-turn during AM peak
- Patterson Avenue & US 101 NB Ramps (#9) – northbound left-turn during AM peak

Table 4: 2015 Queue Analysis Results during Ekwill Fowler & SR 217 Roundabout Construction

#	Intersection	Control	Estimated Available Storage	2015 Baseline - Queues		2015 with Ekwill Fowler & SR 217 Construction	
				AM Peak	PM Peak	AM Peak	PM Peak
1	Hollister Ave & Kellogg Ave	Signal					
	EBL		145	94	84	84	80
	EBT		460	282	405	259	363
	WBL		185	361	146	382	166
	WBT		580	251	275	273	330
	NBT		1,000	66	135	62	137
	NBR		220	84	111	76	85
	SBT		1,000	183	167	175	150
	SBR		125	57	41	55	36
2	Hollister Ave & SR 217 SB	Signal/RAB					
	WB		350	270	264	134/36	162/91
	SB		1,000	529	449	420/111	211/299
	SEB		1,000	--	--	375/56	276/19
	EB		580	319	675	352/182	271/4245
3	Hollister Ave & SR 217 NB	Signal/RAB					
	NB		300	175	309	242/34	284/461
	WB		440	358	280	200/84	203/60
	EB		350	318	292	169/313	286/755
4	Hollister Ave & St. Josephs	TWSC					
	EBL		125	25	25	25	25
	SBLR		1,000	25	25	25	25
5	Hollister Ave & Patterson Ave	Signal					
	EBL		155	68	273	69	273
	EBT		300	180	354	180	350
	WBL		145	135	82	146	84
	WBT		820	598	470	488	468
	NBL		160	75	153	37	109
	NBT		560	181	324	191	346
	SBL		175	170	365	178	363
	SBT		1,000	492	134	446	120
6	Fairview Avenue & US 101 SB Ramps	Signal					
	EBLT		720	104	222	105	225
	EBR		270	199	86	209	90
	NBT		860	122	227	125	222
	NBR		170	123	387	139	433
	SBL		320	155	171	162	171
	SBT		920	266	85	335	85
7	Fairview Avenue & US 101 NB Ramps	Signal					
	EBL		920	244	246	268	235
	WBT		760	871	182	1,077	262
	WBR		250	324	300	312	267
	SBT		300	214	274	196	26

8	Patterson Avenue & US 101 SB Ramps	Signal					
	EBL		770	173	477	183	242
	EBLTR		770	212	458	244	215
	NBT		780	191	375	308	329
	NBR		230	117	401	103	287
	SBL		385	375	475	460	150
	SBT		385	162	265	76	265
9	Patterson Avenue & US 101 NB Ramps	Signal					
	WBL		180	224	235	270	240
	WBLTR		826	241	264	296	251
	WBR		180	94	241	84	228
	NBL		385	158	258	460	342
	NBT		385	0	88	0	88
	SBT		300	334	325	396	280
	SBR		150	323	167	359	134

TWSC = Two Way Stop Control, RAB = Roundabout
Red highlighted values indicate queues exceed storage
Source: Kittelson & Associates, 2013

Attachment 5 contains the LOS and queuing analysis worksheets for the 2015 two-lane Hollister Avenue conditions.

2015 INTERSECTION OPERATIONS DURING EKWILL FOWLER AND SR 217 ROUNDABOUT CONSTRUCTION WITH FAIRVIEW RAMP CLOSURES

As part of the Las Vegas/San Pedro Culvert project, the US 101 northbound on-ramp at Fairview Avenue is projected to require closing for up to 18 months. The US 101 southbound off-ramp at Fairview Avenue will require closing for a span for at least 6 months. As such, both ramps will be closed concurrently for a period of at least 6 months. Given that the construction schedule of the Las Vegas/San Pedro Culvert project will overlap with the Ekwill-Fowler/SR 217 roundabout project construction, this section examines the traffic operational implications due to concurrent construction schedules and resulting closures of these two projects.

Kittelson & Associates (formerly, Dowling Associates) prepared a detailed memorandum *Los Carneros Ramp Closure Traffic Analysis* on July 16, 2010 to estimate and analyze traffic diversions due to the Las Vegas/San Pedro Culvert project. **Attachment 6** provides the origin and destination plots, percent redistribution of traffic and diverted traffic volumes from the *Los Carneros Ramp Closure Traffic Analysis* memorandum. These plots, which were based on the Goleta travel demand model, predict that the US 101 ramp closures at Fairview Avenue are not likely to divert traffic off to Hollister Avenue near SR 217. Therefore, the Las Vegas/San Pedro Culvert project is not projected add or remove peak hour traffic forecasted on Hollister Avenue.

The peak hour diversions resulting from the Fairview Avenue ramp closures were layered onto the 2015 traffic forecasts during Ekwill Fowler and SR 217 roundabout construction as presented in

previous sections. **Figure 10** illustrates the peak hour turning movement at the study intersections assuming concurrent construction schedule and closures for the Las Vegas/San Pedro Culver and Ekwill-Fowler/SR 217 roundabout projects.

To calculate AM/PM peak hour intersection LOS, 2015 turning movements with the concurrent construction were input into the appropriate intersection operational analysis software. As mentioned previously, RTOR counts were discounted from the forecast right-turns at the intersections. For the HCM analysis, the signal timings at all signalized intersections were optimized using SYNCHRO-8 program.

Table 5 depicts the LOS analysis results for just those study area intersections affected by the concurrent construction phases (i.e., the US 101 ramp closures at Fairview Avenue were not predicted to add any traffic to study area intersections 1-5).

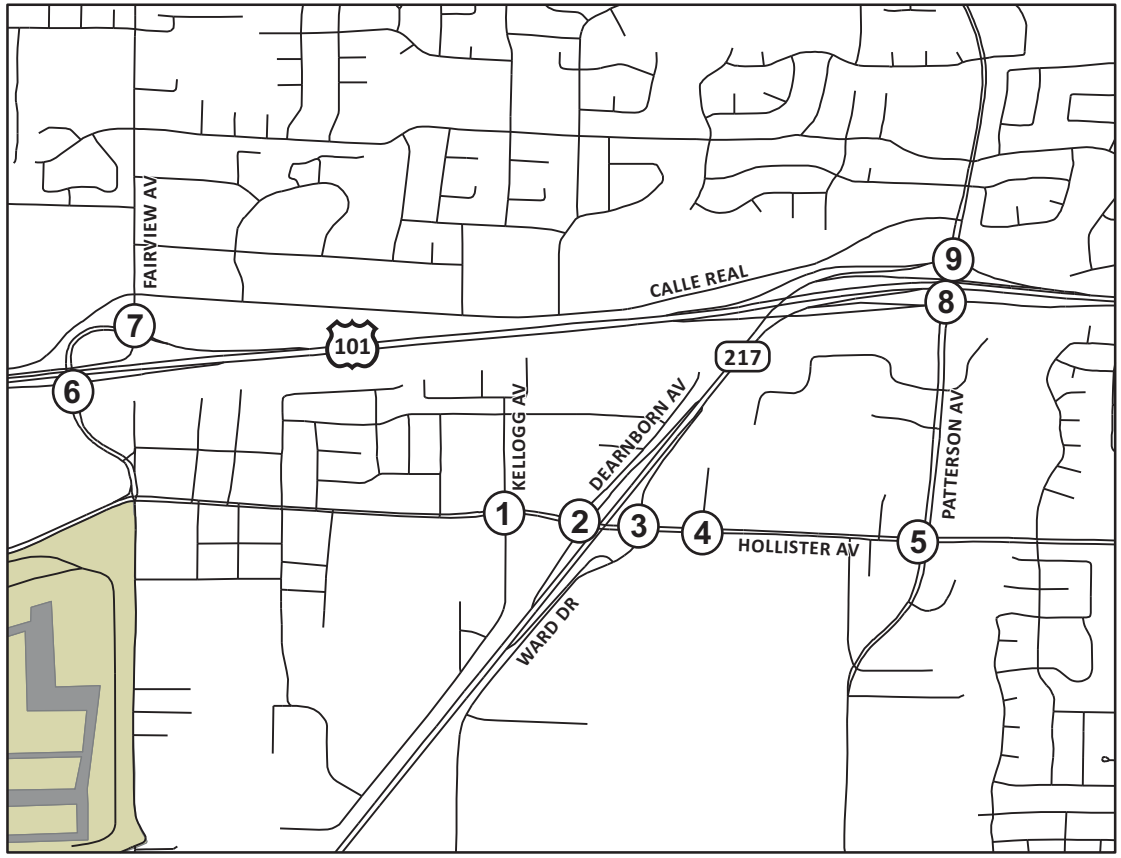

N

1 Kellogg Avenue/ Hollister Avenue

2 SR 217 SB Ramps/ Hollister Avenue

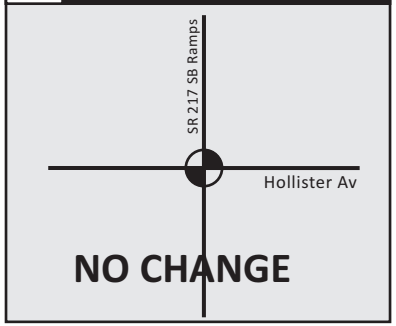

3 SR 217 NB Ramps/ Hollister Avenue

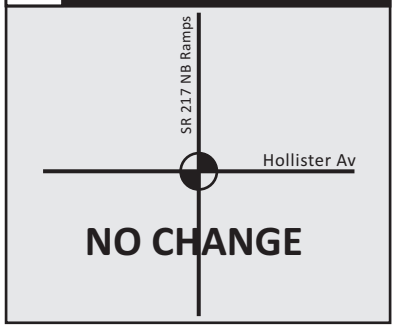

4 St. Joseph's Street/ Hollister Avenue

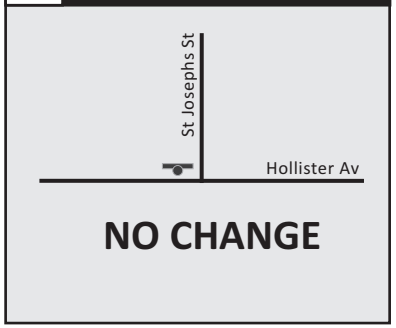

5 Patterson Avenue/ Hollister Avenue

6 Fairview Ave/ US-101 SB Ramps

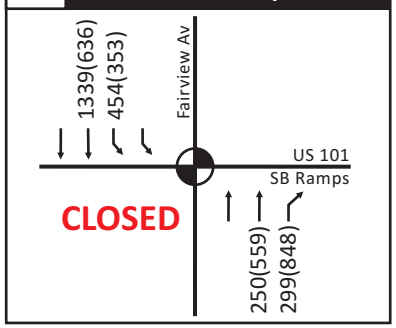

7 Fairview Ave/ US-101 NB Ramps

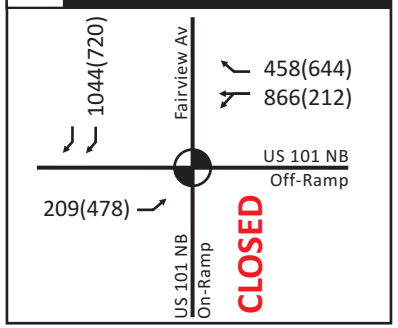

8 Patterson Ave/ US-101 SB Ramps

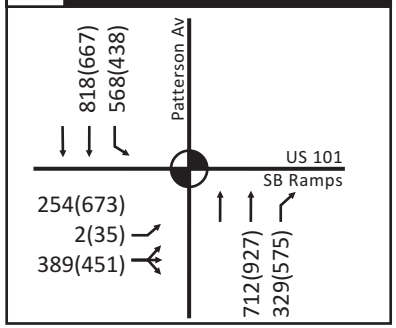

9 Patterson Ave/ US-101 NB Ramps

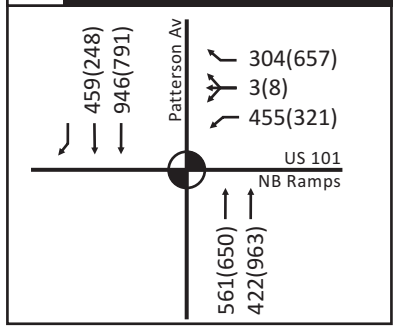

Legend

- Lanes/Movement
- Stop Sign
- Traffic Signal
- Roundabout

2015 During Construction & with Fairview Ramp Closures
Turning Movement Volumes - AM(PM)

Figure **10**

Table 5: 2015 Level of Service Analysis Results during Ekwill-Fowler and SR 217 Roundabout Construction with Fairview Ramp Closures

#	Intersection	Control	Peak Hour	2015 Baseline		2015 with Ekwill-Fowler & SR 217 Construction and Fairview Ramp Closures	
				Delay OR V/C [2]	Level of Service	Delay OR V/C [2]	Level of Service
6	Fairview Avenue & US 101 SB Ramps [1]	Signal	AM	14.4	B	2.7	A
			PM	17.5	B	6.1	A
7	Fairview Avenue & US 101 NB Ramps [1]	Signal	AM	30.4	C	18.3	B
			PM	18.7	B	12.1	B
8	Patterson Avenue & US 101 SB Ramps [1]	Signal	AM	23.3	C	29.5	C
			PM	42.3	**D**	53	**D**
9	Patterson Avenue & US 101 NB Ramps [1]	Signal	AM	24.3	C	44.2	**D**
			PM	27.9	C	38.8	**D**

LOS exceeds State's threshold

RAB = Roundabout, TWSC = Two Way Stop Control

1 Indicates state operated intersection. State threshold criteria applies to identify impacts

2 For signalized intersections, average volume to capacity ratio (v/c) and LOS is reported following ICU analysis methodology. For side-street stop controlled intersections, the delay (seconds/vehicle) and LOS for the worse movement is shown following 2000 HCM analysis methodology. V/C values are shown in *italics*.

Source: Kittelson & Associates, 2013

The synopsis of the operational analysis result at each study intersection is provided below:

- Patterson Avenue & US 101 SB Ramps (#8) – At LOS D, delay increased by 10.7 seconds due to additional 196 trips during the PM peak hour. This is considered a temporary impact due to concurrent construction schedules.
- Patterson Avenue & US 101 NB Ramps (#9) – LOS is projected to degrade to unacceptable "D" from "C" during the both peak hours as a result of additional trips diverted from SR 217, Hollister Avenue and Fairview Avenue ramps. This is considered a temporary impact due to concurrent construction schedules.

Table 6 illustrates the 95th percentile queues for just those study area intersections affected by the concurrent construction phases (i.e., the US 101 ramp closures at Fairview Avenue were not predicted to add any traffic to study area intersections 1-5). In addition to the locations where the 95th percentile queues are projected to exceed the storage under the 2015 baseline conditions, the following locations are anticipated to experience insufficient storage:

- Patterson Avenue & US 101 SB Ramps (#8) – southbound left-turn during AM peak
- Patterson Avenue & US 101 NB Ramps (#9) – northbound left-turn during both peaks

Table 6: 2015 Queue Analysis Results during Ekwill Fowler & SR 217 Roundabout Construction with Fairview Ramp Closures

#	Intersection	Control	Estimated Available Storage	2015 Baseline - Queues		2015 with Ekwill Fowler & SR 217 Construction and Fairview Ramp Closures - Queues	
				AM Peak	PM Peak	AM Peak	PM Peak
6	Fairview Avenue & US 101 SB Ramps	Signal					
	EBLT		720	104	222	--	--
	EBR		270	199	86	--	--
	NBT		860	122	227	27	67
	NBR		170	123	387	48	221
	SBL		320	155	171	50	106
	SBT		920	266	85	0	0
7	Fairview Avenue & US 101 NB Ramps	Signal					
	EBL		920	244	246	129	157
	WBT		760	871	182	901	130
	WBR		250	324	300	247	277
	SBT		300	214	274	--	--
8	Patterson Avenue & US 101 SB Ramps	Signal					
	EBL		770	173	477	257	551
	EBLTR		770	212	458	278	533
	NBT		780	191	375	308	441
	NBR		230	117	401	103	375
	SBL		385	375	475	442	418
	SBT		385	162	265	303	244
9	Patterson Avenue & US 101 NB Ramps	Signal					
	WBL		180	224	235	282	290
	WBLTR		826	241	264	308	306
	WBR		180	94	241	85	277
	NBL		385	158	258	558	478
	NBT		385	0	88	150	216
	SBT		300	334	325	408	367
	SBR		150	323	167	375	185

TWSC = Two Way Stop Control, RAB = Roundabout
Red highlighted values indicate queues exceed storage
Source: Kittelson & Associates, 2013

TEMPORARY TRAFFIC IMPACTS AND MITIGATIONS – EKWILL FOWLER AND SR 217 ROUNDABOUT CONSTRUCTION

City operated intersections would not experience degradation in operations to trigger a project impact. Temporary impacts are projected to occur at one intersection on Hollister Avenue (SR 217 northbound ramps). This temporary impact would occur upon transition to a roundabout control despite a decrease in total intersection volume. As a result of traffic diversion during construction, two of four US 101 ramp intersections studied are projected to experience higher delays relative to the baseline.

All impacts identified in this section were temporary in nature and based on the City or State's significance impact criteria as previously described, although these criteria do not explicitly address the conditions occurring from construction activities.

Hollister Avenue and SR 217 NB Ramps/Ward Drive (#3)

Temporary Impacts

Impacts were identified based on the HCM LOS analysis for this state owned intersection. This intersection would operate acceptably under signal control. However, when the intersection transitions to a roundabout during Stage 3 of construction, it would drop from LOS C to an unacceptable LOS D during the PM peak hour under the baseline conditions. The intersection would serve lower peak hour volumes during the construction relative to the baseline conditions.

Temporary Mitigation Measures

Given the construction primarily occurs at this intersection to alter its configuration; any temporary improvement may not be feasible.

Fairview Avenue and US 101 NB Ramps (#7)

Temporary Impacts

Impacts were identified based on the HCM LOS analysis. The signalized intersection would operate from acceptable HCM LOS C under the baseline conditions to LOS D during the AM peak hour. No capacity related lane reductions are planned at this intersection. Overall, the intersection would serve 133 more trips during the AM peak hour relative to the baseline conditions.

The projected 95th percentile queues for the westbound US 101 off-ramp approach would extend back 1077 feet from the Fairview Avenue, thereby spilling back onto the freeway mainline. The estimated queues exceed the ramp storage under the baseline conditions; however, are projected to worsen during the construction schedule.

Temporary Mitigation Measures

Restriping the westbound off-ramp approach to provide a shared through/right-turn lane instead of current dedicated right-turn lane would achieve acceptable operations (LOS C or better) at this intersection. This temporary improvement however will require an additional receiving lane on the west leg, which could be achieved by restriping this leg. The southbound right turn which is currently a free movement would be converted to a right turn overlap movement with eastbound left turns. A detailed engineering evaluation should be performed to determine feasibility of this physical improvement.

Patterson Avenue and US 101 SB Ramps (#8)

Temporary Impacts

Impacts were identified based on the HCM LOS analysis for this state operated intersection. The signalized intersection would experience the same LOS but increased delays (3.4 seconds). No capacity related lane reductions are planned at this intersection. Overall, the intersection would serve 124 more trips during the PM peak hour relative to the baseline conditions.

Temporary Mitigation Measures

The traffic signal retiming and re-coordination with adjacent ramp intersection would improve operations but not enough to avoid traffic operational impacts. Restriping eastbound off-ramp approach to delineate dual left and shared through/right-turn lanes would overcome the temporary impacts. Based on aerial pictures, this improvement will need to use shoulders on the north and south sides, which would provide for approximately 11 foot lane widths. Modified traffic signal timings will be needed in conjunction with this mitigation. Detailed engineering evaluations should be performed to determine feasibility of this physical improvement.

TEMPORARY TRAFFIC IMPACTS AND MITIGATIONS – EKWILL FOWLER & SR 217 ROUNDABOUT CONSTRUCTION WITH FAIRVIEW RAMP CLOSURES

All impacts identified in this section were temporary in nature and based on the City or State's significance impact criteria as previously described, although these criteria do not explicitly address the conditions occurring from construction activities.

Below is the description of the temporary traffic impacts and recommended improvements.

Hollister Avenue and SR 217 NB Ramps/Ward Drive (#3)

Temporary Impacts

Same as the Hollister Avenue narrowing/SR 217 construction alone (refer to previous section).

Temporary Mitigation Measures

Same as the Hollister Avenue narrowing/SR 217 construction alone (refer to previous section).

Patterson Avenue and US 101 SB Ramps (#8)

Temporary Impacts

Impacts were identified based on the HCM LOS analysis for this state operated intersection. The signalized intersection would experience same LOS but with increased delay of 10.7 seconds during the PM peak hour. No capacity related lane reductions are planned at this intersection. Overall, the intersection would serve 196 more trips during the PM peak hour relative to the baseline conditions.

Temporary Mitigation Measures

The traffic signal retiming and re-coordination with the adjacent ramp intersection would improve operations but not enough to avoid traffic operational impacts. Restriping the eastbound off-ramp approach to delineate dual left and shared through/right-turn lanes would overcome the temporary impacts. Based on aerial pictures, this improvement will need to use shoulders on the north and south sides, which would provide for approximately 11 foot lane widths. Modified traffic signal timings will be needed in conjunction with this mitigation. Detailed engineering evaluations should be performed to determine feasibility of this physical improvement.

Patterson Avenue and US 101 NB Ramps (#9)

Temporary Impacts

Impacts were identified based on the HCM LOS analysis for this state operated intersection. The signalized intersection would degrade from LOS C to LOS D during the AM and PM peak hours. No capacity related lane reductions are planned at this intersection. Overall, the intersection would serve 268 and 202 more trips during the AM and PM peak hours respectively relative to the baseline conditions.

Temporary Mitigation Measures

Although signal retiming and optimization would mitigate temporary impacts at this intersection in the PM peak hour, physical improvements would be needed to mitigate AM peak hour temporary impacts. Restriping the northbound Patterson Avenue approach for dual left turns and one through lanes mitigates the traffic impacts. Detailed engineering evaluations should be performed to determine feasibility of this physical improvement.

APPENDIX I
SCENIC RESOURCE EVALUATION AND VISUAL IMPACT ASSESSMENT

Technical Memorandum

Date: 8/8/2014

To: Rosemarie Gaglione, City of Goleta

From: Craig Woodman, URS Corporation

Subject: Scenic Resource Evaluation And Visual Impact Assessment (VIA) for the Hollister Avenue Bridge Replacement Project, prepared by Corinne Lytle Bonine, URS Corporation

05-SB-0-GLTA
BRLS-5481 (013)
Hollister Av Br Replacement

The Hollister Avenue Bridge Replacement Project, located in the City of Goleta, California, has been reviewed for potential impacts to visual resources. See Figures 1-3.

The project proposes to replace the existing 4-lane Hollister Avenue Bridge with a new 4-lane bridge. The project is located within the City of Goleta, spans San Jose Creek and is adjacent to the Hollister Avenue/State Route 217/ Interchange. The existing bridge was constructed in 1964 and widened in 1981. The existing bridge consists of pre-stressed concrete voided slab units supported on concrete abutments and driven piles. The existing single span bridge is 104 feet wide and 45 feet long. The purpose of the proposed Project is to replace the existing Hollister Avenue Bridge with a new bridge that will convey 100-year storm flows and meet current design standards while providing a safe crossing over San Jose Creek for vehicles and pedestrians. The existing bridge will be replaced with a new structure that will clear span the creek and be approximately 68 feet in length. The typical roadway section will consist of four 12-foot-wide through traffic lanes, bicycle lanes/shoulders, 10-foot-wide sidewalks, and a median. The proposed bridge type will be a cast-in-place post-tensioned concrete slab.

Architecture and Landscape Design

Architectural elements of the proposed bridge have not been detailed but the project is located in Goleta's Old Town Heritage District and would include aesthetic treatments. The Visual and Historic Resources Element of Goleta's 2006 General Plan specifies that all design in Old Town shall maintain and enhance the historic character and be consistent with the Goleta Heritage District Architecture and Design Guidelines (Goleta Heritage District Guidelines). The Goleta Old Town Heritage District Architecture and Design Guidelines were developed to "enhance the image of Old Town, ensure development of a distinctive and unified streetscape, and contribute to a more pedestrian oriented downtown area."

The General Plan also identifies policies associated with landscape design, streetscape and frontage design, lighting, signage, and utilities that relate to visual aspects of the project's design. For example, the General Plan indicates Hollister Avenue at SR 217 should be developed as a prominent "Gateway" to Goleta. The project would incorporate these policies and guidelines to ensure that its design preserves and enhances Goleta's visual character. As per the Goleta Heritage District Guidelines, architectural elements of public improvements would be inspired by historic design styles in Goleta Old Town. Goleta's Design Review Board will conduct public meetings to review the architectural elements

of the project during design phases. Review would include such architectural elements as street lights, bridge design, and street furnishings (benches, litter receptacles, etc.). Recommendations from the Design Review Board would be incorporated into the project design, as feasible.

The proposed bridge design will be integrated with the design of two nearby roundabouts that will be constructed as part of the Ekwill Street and Fowler Road Extensions Project. The bridge and roundabouts will be designed to form a visually unified streetscape.

Existing Setting

The existing visual setting comprises newer/well maintained construction generally characterized by lack of visual continuity, with substantial areas of aging and deteriorating buildings. Pockets of inadequate general commercial/service industrial development both north and south of Hollister Avenue suffer from lack of maintenance, parking, and landscaping. Residential uses occur within several defined neighborhoods and also include a substantial amount of units in non-residential zone districts.

Hollister Avenue and State Route 217 are located just south of Highway 101, which is an Eligible State Scenic Highway, but the project site is not visible from Highway 101. The project site is not near any classified scenic byways and is not itself classified as a National Scenic Highway or Byway. Additionally, no protected Scenic Waterways flow through the project site. However, the City of Goleta lists State Route 217 as a local scenic corridor.

Appendix A Character Photos, includes photographs of the existing Hollister Avenue Bridge and surrounding area. The visual character of the area surrounding Hollister Avenue and State Route 217 has been recently described in the City of Goleta's *Visual Impact Assessment of the Ekwill Street and Fowler Road Extensions Project* (URS June 2011), which included roundabouts near the Hollister Avenue Bridge among other areas. The present VIA was prepared consistent with that document, which was prepared in accordance with the Caltrans Standard Environmental Reference and included the area that would be affected by the Hollister Avenue Bridge Replacement Project.

The existing visual character of the Hollister Avenue Bridge Replacement Project location is typical of an urban arterial and freeway interchange. There are multiple on- and off-ramps, street lights, and traffic signals. To the west of the Hollister Avenue/ State Route 217 Interchange is a business and commercial thoroughfare. For instance, a vacant restaurant and the Mission City Auto Center sit at the southwest corner of Hollister Avenue and State Route 217. Large commercial signs, intended to be visible to motorists, are scattered along this western section of Hollister Avenue. Commercial activities are more limited immediately east of Hollister Avenue/ State Route 217 Interchange, where a large orchard of lemon trees is located on the south side of Hollister Avenue (east of State Route 217). In general, the visual quality of the area immediately adjacent to the proposed project is low to moderate.

The visual landscape, particularly to the west of State Route 217 along Hollister Avenue, is not intact and is an eclectic mix of commercial businesses with minimal landscaping or native foliage. The landscape as a whole has little visual coherence or compositional harmony. However, as stated previously, two areas in the general vicinity of the bridge replacement project (but outside its Area of Potential Impact) have some visual unity and, according to the Goleta General Plan/Coastal Land Use Plan Scenic Resources Map, should be protected from adverse impacts. These areas are the large lemon orchard on the southeastern corner of the Hollister Avenue/State Route 217 Interchange and the Sexton House to the north of the orchard, across Hollister Avenue, with its attractive landscaping and

mature trees. In addition, the view of the mountains looking north from the Goleta Valley Community Center is also identified as a scenic view to be protected.

Impact Assessment

Review of the bridge replacement project site and project plans indicate that the project would not result in substantial adverse impacts to the visual environment or scenic resources. The proposed heights and locations, interpretive information, native shrubs and other amenities would be minimized such that no views would be reduced. Materials and design of site features are proposed to be appropriate for the visual character of this location.

Although the visual quality of the built environment along Hollister Avenue is generally considered low, the Goleta General Plan/Coastal Land Use Plan lists State Route 217 and Fairview Avenue as local scenic corridors because they provide ocean views (in the distance to the south) and mountain views (in the distance to the north) beyond the built environment. While the scenic components described above have been identified as significant, based on the nature of the proposed improvements, views to these resources would not be significantly impacted by the proposed improvements as the improvements would be on or near the ground surface, thereby not obscuring the views to a significant degree.

In addition, it is important to note that, according to the Goleta General Plan/Coastal Land Use Plan, the Hollister Avenue intersections at Fairview Avenue and at State Route 217 are recognized as areas that should be enhanced in the future to create prominent gateways to Goleta. The proposed improvements would assist in meeting the objective of enhancing the gateway to Goleta from the Hollister Avenue / State Route 217 Interchange.

Appendix A Character Photos, contains photographs of the project site and surrounding area. These photographs show the existing visual character and quality, as well as aid in illuminating the existing viewer sensitivity and exposure for the project.

This review indicates that the project would not adversely affect any “Designated Scenic Resource” as defined by California Environmental Quality Act statutes or guidelines, or by Caltrans policy. Additionally, the project supports a National Environmental Policy Act Categorical Exclusion. The proposed project would result in a slight change in visual character at the project location. However through the use of appropriate architectural treatments and design, and incorporation of a comprehensive landscape plan, potentially adverse visual effects of the project would be avoided or substantially reduced. The proposed bridge project would be designed to enhance the visual character of the area consistent with the Goleta Heritage District Architecture and Design Guidelines. The Guidelines were developed to “enhance the image of Old Town, ensure development of a distinctive and unified streetscape, and contribute to a more pedestrian oriented downtown area.” Due to proximity, the design of the proposed bridge replacement would be integrated with the design of two roundabouts that will be constructed along Hollister Avenue as part of the Ekwill Street and Fowler Road Extensions Project. Collectively, the bridge and roundabouts will provide a visually unified gateway to the City. Project-specific and cumulative effects are expected to be beneficial.

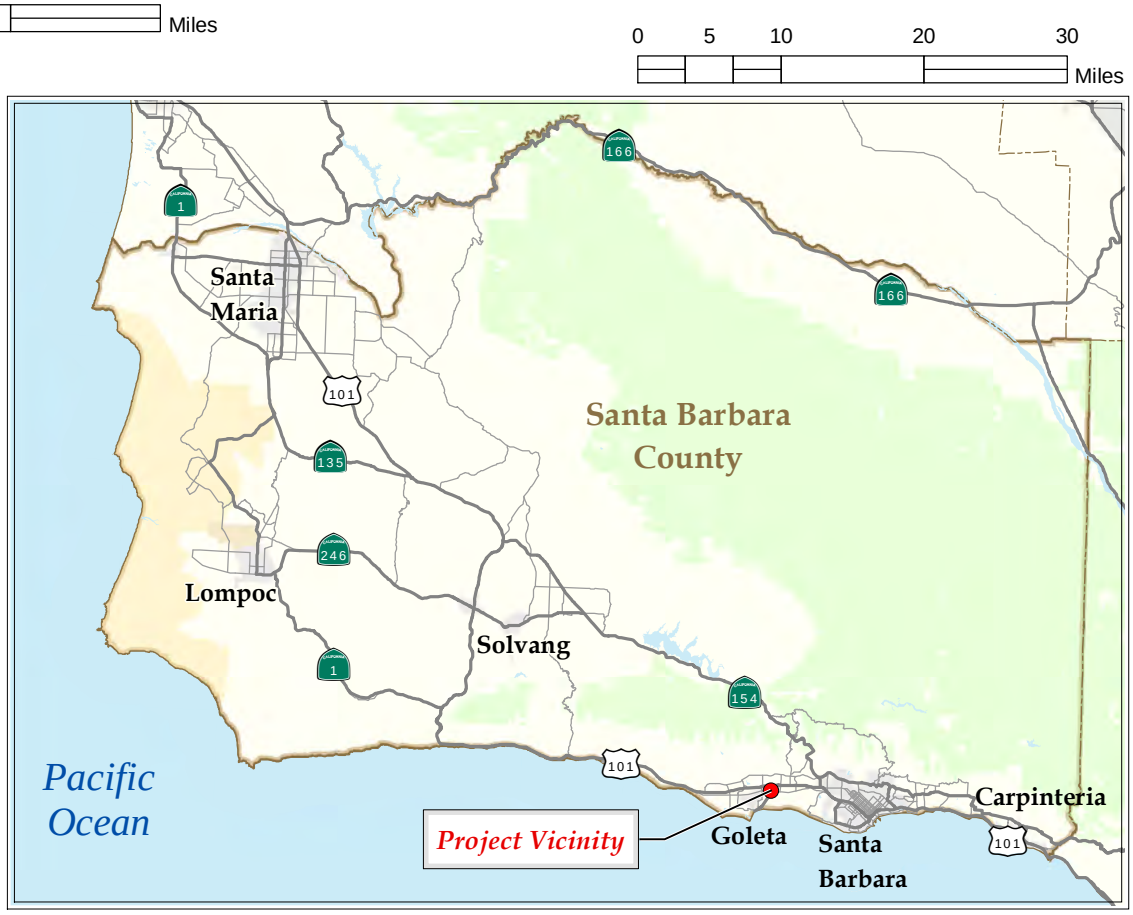

Hollister Avenue Bridge Replacement Project City of Goleta, CA 05-SB-0-GLTA BRLS-5481 (013)	**Source:** [1] The layer, below 1:3m, presents the 50 states, the District of Columbia, and Puerto Rico of the United States. It provides detailed boundaries that are consistent with the block group, tract, and county data sets and are	**Figure 1.** PROJECT VICINITY	2013
URS Corporation			

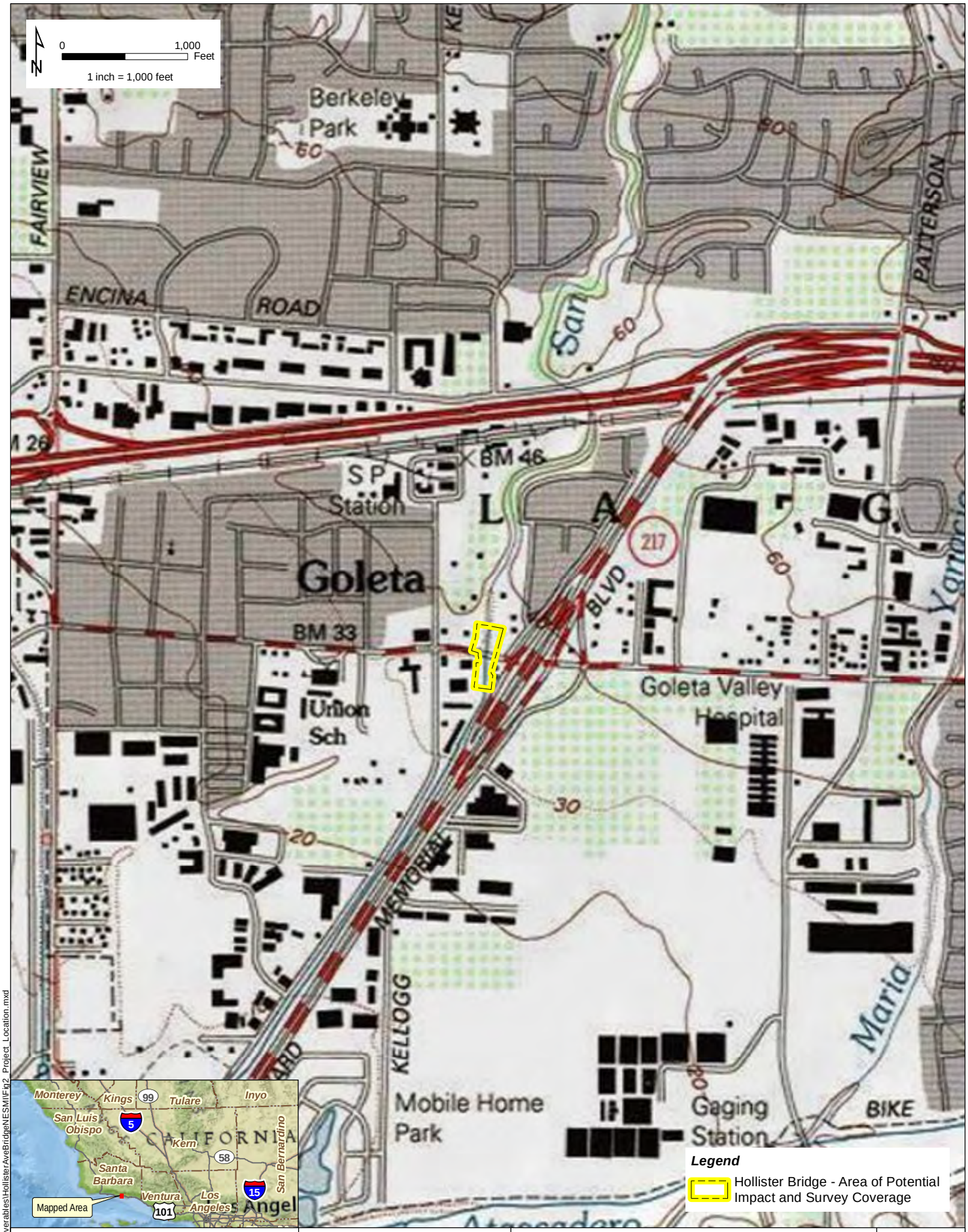

Hollister Avenue
Bridge Replacement Project
City of Goleta, CA
05-SB-0-GLTA BRLS-5481 (013)

URS Corporation

Source: [1] Seamless, scanned images of United States Geological Survey (USGS) paper topographic 1:24,000 scale,Goleta Quad 1988, Copyright: 2013 National Geograpic Society, i-cubed.

Figure 2. PROJECT LOCATION AND SURVEY COVERAGE

2013

T:\City of Goleta\deliverables\HollisterAveBridgeNESM\Fig2_Project_Location.mxd

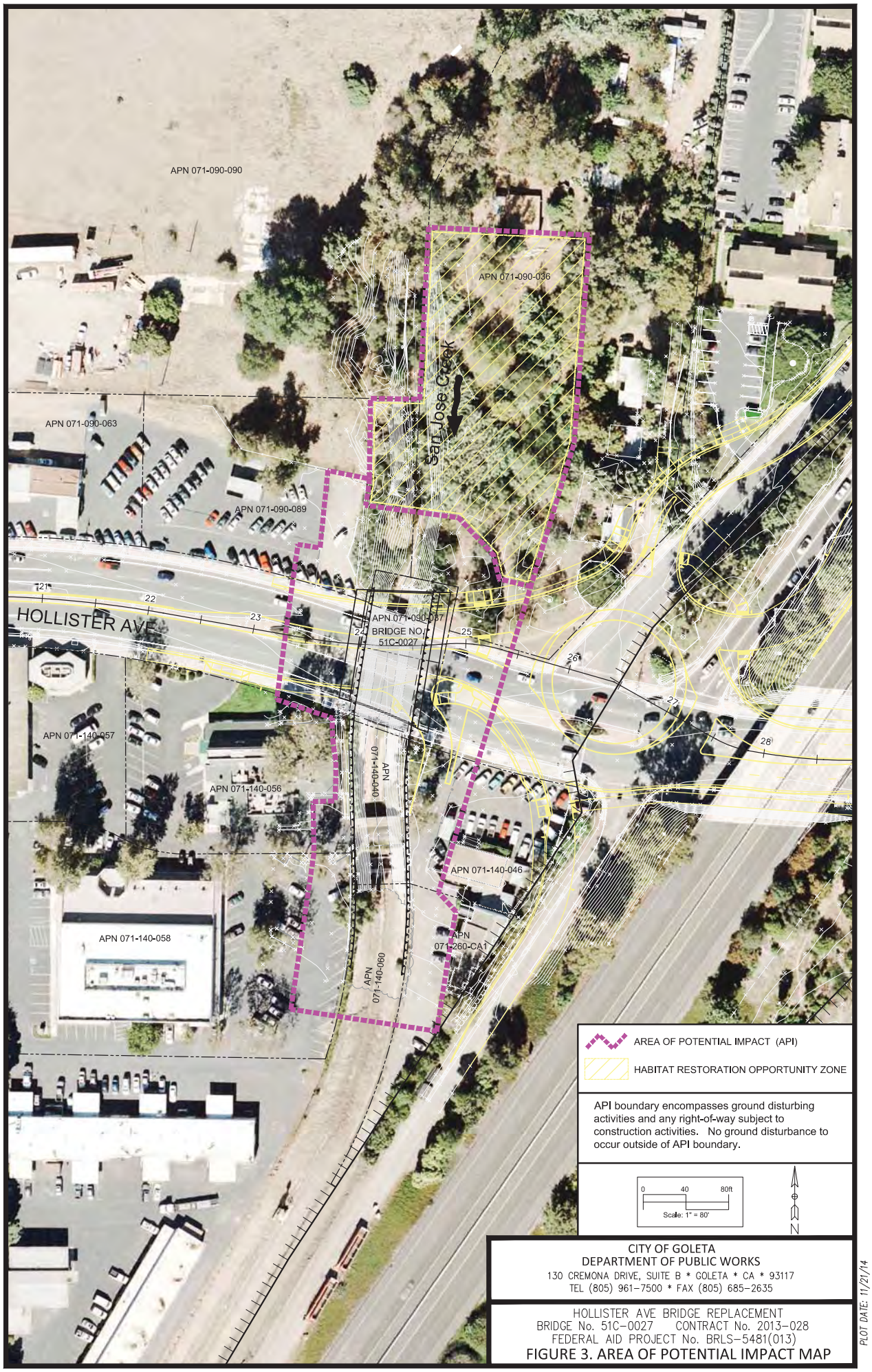

CITY OF GOLETA
DEPARTMENT OF PUBLIC WORKS
130 CREMONA DRIVE, SUITE B * GOLETA * CA * 93117
TEL (805) 961-7500 * FAX (805) 685-2635

HOLLISTER AVE BRIDGE REPLACEMENT
BRIDGE No. 51C-0027 CONTRACT No. 2013-028
FEDERAL AID PROJECT No. BRLS-5481(013)

FIGURE 3. AREA OF POTENTIAL IMPACT MAP

PLOT DATE: 11/21/14

Appendix A: Character Photos

URS

	Photograph #1 Date: 9/10/13 Comments: View towards existing Hollister Bridge
	Photograph #2 Date: 9/10/13 Comments: View towards existing Hollister Bridge

URS

	Photograph #3 Date: 9/10/13 Comments: View from existing Hollister Bridge
	Photograph #4 Date: 9/10/13 Comments: View towards existing Hollister Bridge

APPENDIX J
WATER QUALITY ASSESSMENT

WATER QUALITY ASSESSMENT

FOR THE
HOLLISTER AVENUE BRIDGE REPLACEMENT PROJECT

GOLETA, CALIFORNIA

Prepared for:

130 Cremona Drive, Suite B
Goleta, CA 93117

Prepared by:

130 Robin Hill Road, Suite 100
Santa Barbara, California 93117
(805) 692-0600 ◆ Fax: (805) 964-0259

URS Project Number 28907448

October 2013

TABLE OF CONTENTS

1.0 PROJECT DESCRIPTION 1
2.0 WATER QUALITY SETTING 8

2.1 SURFACE WATER 8
2.2 GROUNDWATER 9
2.3 FLOOD HAZARDS 9

3.0 REGULATORY BACKGROUND 11
4.0 EVALUATION OF POTENTIAL WATER QUALITY IMPACTS 12

4.1 CONSTRUCTION 12
4.2 POST-CONSTRUCTION 12

5.0 WATER QUALITY COMPLIANCE REQUIREMENTS 15

5.1 CONSTRUCTION 15
5.2 POST CONSTRUCTION 15

5.2.1 Surface Water 15
5.2.2 Groundwater 15
5.2.3 Flooding 15

6.0 CEQA/NEPA EVALUATION 16
7.0 REFERENCES 17

Figures

Figure 1 Project Vicinity 2
Figure 2 Project Location and Survey Coverage 3
Figure 3 Area of Potential Impact Map 4

Tables

Table 1 Relationship of Sources to Primary Pollutants of Concern 10

Appendices

Appendix A Federal Emergency Management Agency Flood Insurance Rate Map Panel 06083C1326G

SECTION 1.0
PROJECT DESCRIPTION

The City of Goleta proposes to replace the existing 4-lane Hollister Avenue Bridge with a new 4-lane bridge (see Figures 1–3). The existing bridge spans San Jose Creek and is adjacent to the State Route 217/Hollister Avenue Interchange. The existing bridge was constructed in 1964 and widened in 1981. The existing bridge consists of prestressed concrete voided slab units supported on concrete abutments and driven piles. The existing single span bridge is 104 feet wide and 45 feet long. The purpose of the project is to replace the existing Hollister Avenue Bridge with a new bridge that will convey 100-year storm flows and meet current design standards providing a safe crossing over San Jose Creek for vehicles and pedestrians.

The existing bridge will be replaced with a new structure that will clear span the creek and be approximately 68 feet in length. The typical roadway section will consists of four 12-foot-wide through traffic lanes, bicycle lanes/shoulders, 10-foot-wide sidewalks and median. The bridge type will be a cast-in-place post-tensioned concrete slab. The new foundations and abutments will be constructed behind the existing abutments. The abutments will be supported on cast-in-drilled-hole (CIDH) piles. Driven pile foundations will not be used due to the resulting noise and vibration impacts. The new abutment walls will act as the channel walls within the limits of the new bridge. Project disturbance limits are anticipated to be less than one acre.

Utilities will be relocated, but their precise locations have not yet been designed. Some may be relocated on or within the bridge while others may be relocated via directional boring under San Jose Creek.

This project consists of widening the San Jose Creek channel immediately downstream of the new bridge so that the channel conveys 100-year flood flows and conforms to the San Jose Creek Capacity Improvement and Fish Passage Project (previously known as the San Jose Creek Capacity Improvement Project). The existing concrete lined trapezoidal shaped channel will be replaced with a wider channel with vertical walls. Cantilever walls utilizing steel reinforced drilled shafts will be used for the channel walls. The channel bottom will be protected with articulated concrete mats, with provisions for fish passage as previously approved in the environmental and other resource agency permits for the San Jose Creek Capacity Improvement and Fish Passage Project.

A privately owned steel bridge located about 100 feet south of the Hollister Avenue Bridge will continue to be utilized for as long as possible to provide vehicular access to the businesses located south of Hollister Avenue and between San Jose Creek and State Route 217 southbound on-ramp, but will ultimately be removed as part of the project.

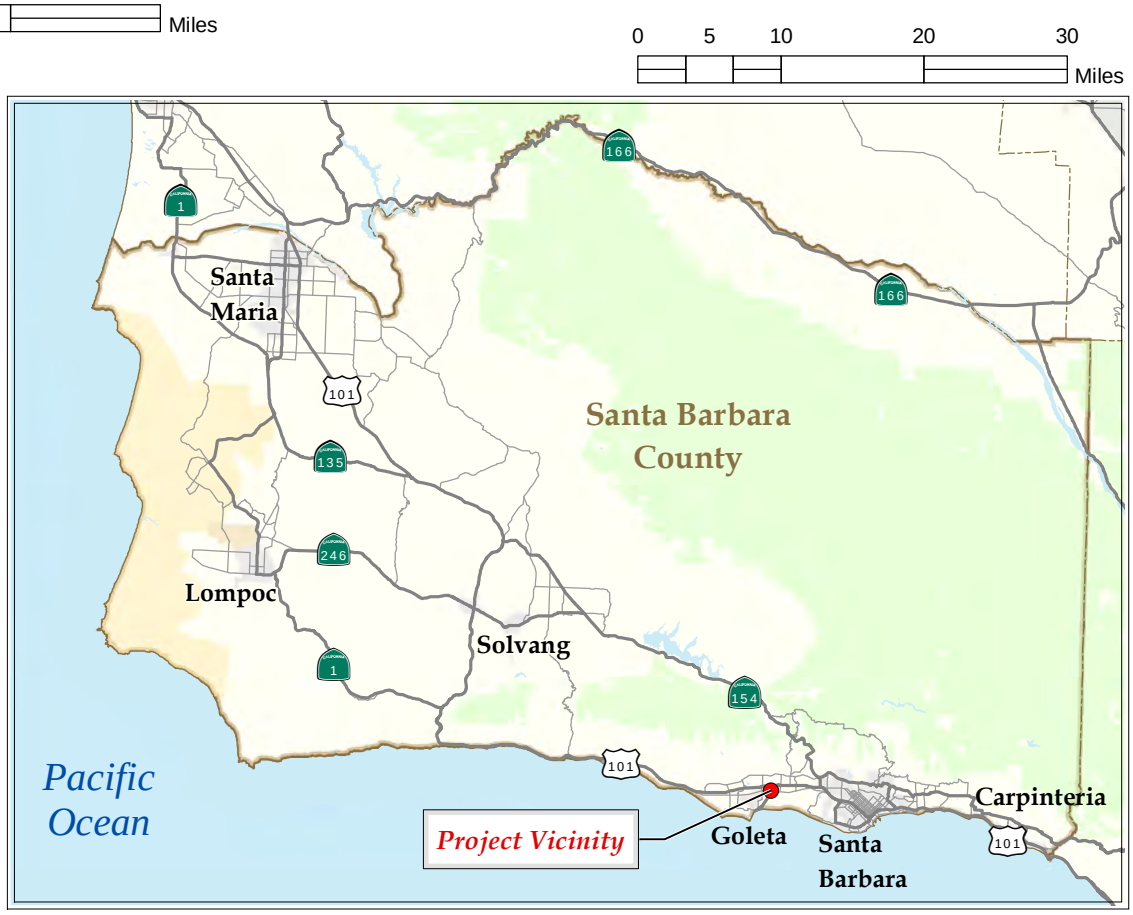

Hollister Avenue Bridge Replacement Project City of Goleta, CA 05-SB-0-GLTA BRLS-5481 (013)	**Source:** [1] The layer, below 1:3m, presents the 50 states, the District of Columbia, and Puerto Rico of the United States. It provides detailed boundaries that are consistent with the block group, tract, and county data sets and are	**Figure 1.** PROJECT VICINITY	2013
URS Corporation			

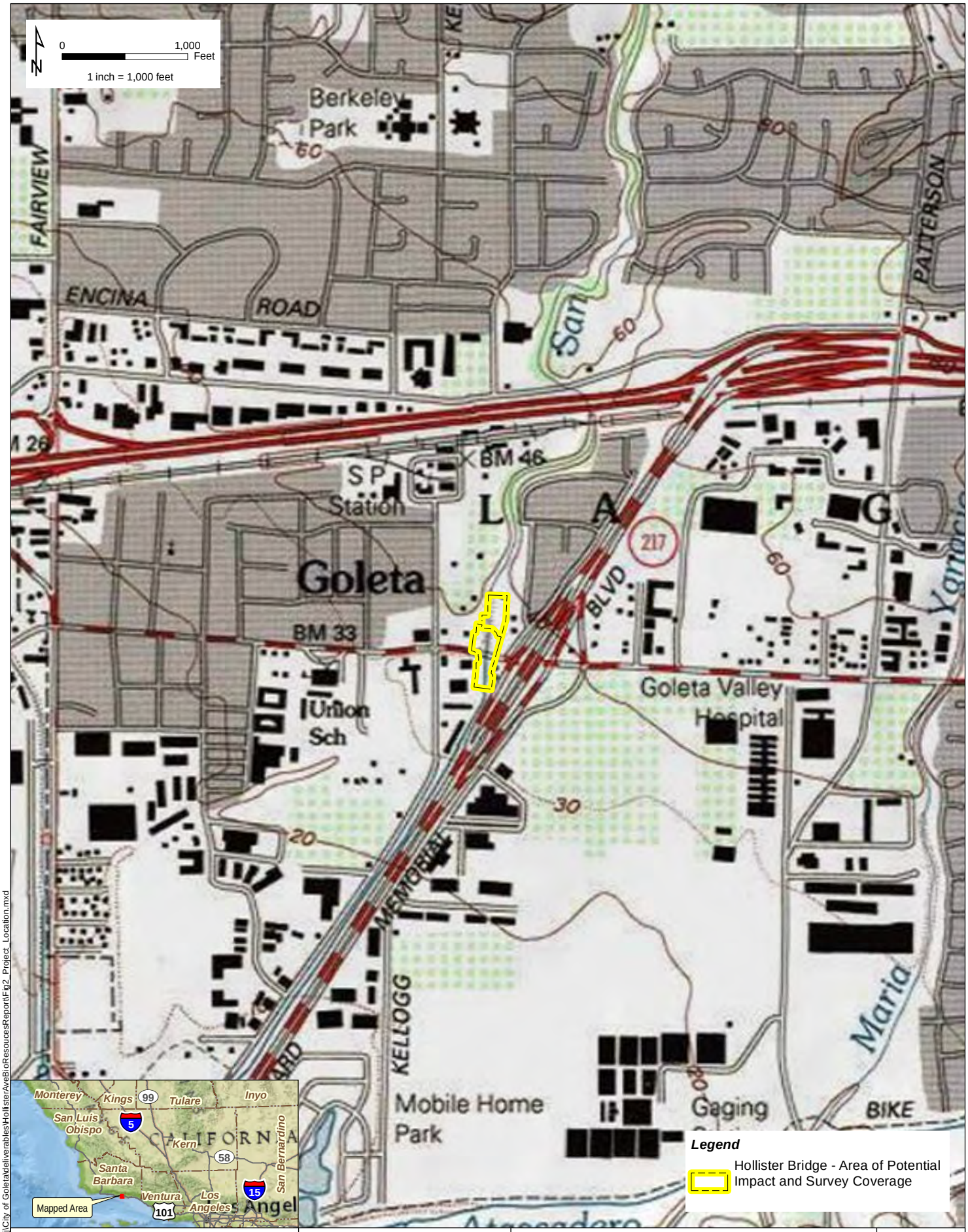

V:\Projects\GIS_Proj\City of Goleta\deliverables\HollisterAveBioResoucesReport\Fig2_Project_Location.mxd

Hollister Avenue
Bridge Replacement Project
City of Goleta, CA
05-SB-0-GLTA BRLS-5481 (013)

URS Corporation

Source: [1] Seamless, scanned images of United States Geological Survey (USGS) paper topographic 1:24,000 scale,Goleta Quad 1988, Copyright: 2013 National Geograpic Society, i-cubed.

Figure 2. PROJECT LOCATION AND SURVEY COVERAGE

2014

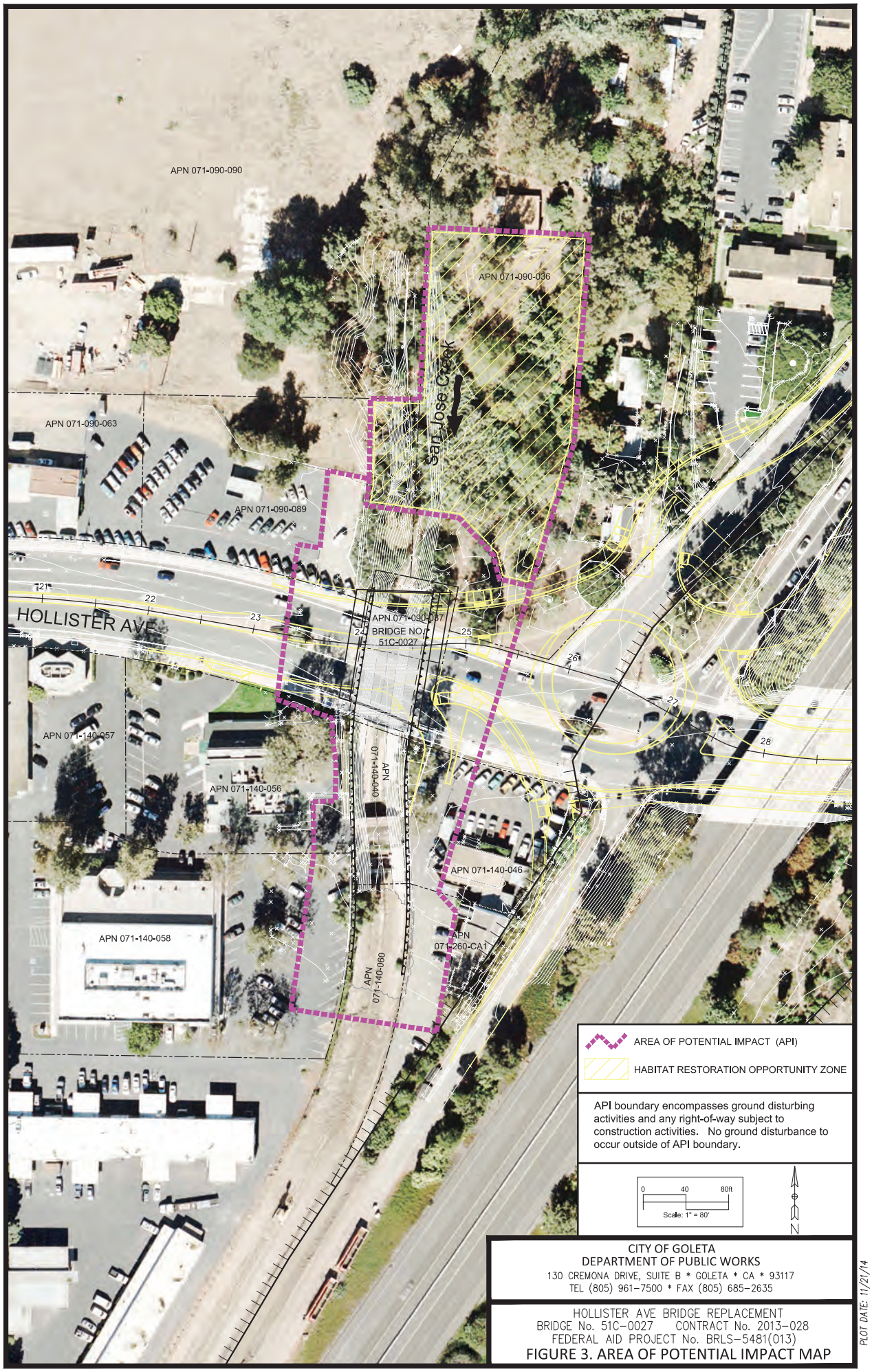

CITY OF GOLETA
DEPARTMENT OF PUBLIC WORKS
130 CREMONA DRIVE, SUITE B * GOLETA * CA * 93117
TEL (805) 961-7500 * FAX (805) 685-2635

HOLLISTER AVE BRIDGE REPLACEMENT
BRIDGE No. 51C-0027 CONTRACT No. 2013-028
FEDERAL AID PROJECT No. BRLS-5481(013)

FIGURE 3. AREA OF POTENTIAL IMPACT MAP

PLOT DATE: 11/21/14

This project also consists of constructing the transition from the improved San Jose Creek Channel under the bridge to the natural creek immediately upstream of the bridge. These channel improvements and transitions have already been proposed and approved by various oversight and permitting agencies as part of the San Jose Creek Capacity Improvement and Fish Passage Project. The channel transition work is included in the project since it is contingent on the Hollister Avenue Bridge being replaced.

Demolition of the existing bridge will be performed in accordance with the Caltrans Standard Specifications modified to meet environmental permit requirements. All concrete and other debris resulting from the demolition of the existing bridge will be removed from the project site and disposed of by the contractor. The construction contractor will be responsible for preparing a bridge demolition plan that conforms to the permit requirements.

Water diversion methods may include the use of water bladders, sandbags, sheet piling, pipes or coffer dams, or other structural methods approved by the Project Engineer and California Department of Fish and Wildlife (CDFW). In-stream work will consist of removing the existing abutments, removing the existing channel lining and walls, constructing new channel walls, placement of articulated revetment at the bottom of the creek, constructing new abutments, and placing falsework. This work will be conducted during the dry season work window, typically between May 15 and October 15. This window pertains to work within the creek and is specified by the CDFW and other resource agencies. Work that can be performed without having to be physically in the creek such as traffic control, grading, approach roadway modifications, and bridge barrier construction can be performed outside of this window.

All stream diversion materials will be removed entirely from the project site once construction is complete. Excavation at abutments and channel walls will require dewatering. Groundwater and seepage in the dewatered area would be removed in accordance with Section 401 of the Clean Water Act (CWA). Best management practices (BMP) will be implemented during construction to prevent concrete or other materials from entering the channel.

Construction will include the following activities:

- Stage 1:
  - Tree removal and clearing and grubbing in the area of the new bridge and approaches
  - Diversion of San Jose Creek into a pipe through the construction site
  - Placement of k-rail and reducing traffic to a minimum of one lane in each direction on the southern portion of the existing bridge

- Temporary relocation of any utilities located on the northern portion of the existing bridge
- Removal of northern portion of the existing bridge for its entire length to provide room to construct stage 1 of the new bridge
- Saw cutting and removal of the existing channel walls and lining
- Drilling holes, installing rebar cages and pouring concrete for CIDH piles
- Constructing the new abutments and channel walls that will result in a depth of excavation no greater than 25 feet deep from the top of roadbed
- Erecting falsework that will be placed between the channel walls
- Placing superstructure concrete for stage 1 portion of the new bridge
- Relocation of utilities onto the stage 1 portion of the new bridge
- Removal of falsework from below stage 1 portion of new bridge
- Constructing channel wall transition from new abutments to the natural creek bed immediately upstream of Hollister Avenue
- Constructing the new roadway approaches including grading, compacting, raising existing utility manholes, and placing aggregate base and asphalt concrete pavement

- Stage 2:

  - Routing westbound traffic onto the just completed stage 1 section of the new bridge so that traffic in each direction can maintained using the stage 1 portion of the new bridge and the southern portion of existing bridge for the time period between the in-creek work windows
  - Prior to the start of second in-creek work window, reroute traffic off of the existing bridge and route both directions of traffic to the stage 1 portion of the new bridge (minimum of 1 lane in each direction)
  - Removal of the remaining portion of the existing bridge
  - Installing CIDH piles, constructing new abutments, erecting falsework and placing superstructure concrete for the remaining portion of the new bridge (stage 2)
  - Removal of the privately owned steel bridge and construction of channel walls from new bridge to conform to the improved and wider San Jose Creek channel constructed as part of the San Jose Creek Capacity Improvement and Fish Passage Project
  - Removal of falsework from the channel
  - Installing articulated revetment at bottom of creek and removing diversion pipe

- Constructing the remaining portion of the new roadway approaches including grading, compacting, and placing aggregate base and asphalt concrete pavement

Construction of the proposed project is anticipated to take approximately 24 months to complete. It is anticipated that the bridge construction project will start construction in spring 2015 and be completed by spring 2017.

SECTION 2.0
WATER QUALITY SETTING

The following sections provide the water quality setting in terms of surface water, groundwater and flood hazards.

2.1 SURFACE WATER

The Hollister Avenue Bridge Replacement Project drains to San Jose Creek, which is located in the South Coast Hydrologic Unit, Goleta Hydrologic Subarea (HU 315.31). Beneficial uses of San Jose Creek include:

- Municipal and domestic supply
- Agricultural supply
- Ground water recharge
- Water contact recreation
- Non-contact water recreation
- Wildlife habitat
- Cold fresh water habitat
- Warm fresh water habitat
- Migration of aquatic organisms
- Spawning, reproduction, and/or early development
- Rare, threatened, or endangered species
- Freshwater replenishment
- Commercial and sport fishing

The Central Coast Regional Water Quality Control Board (RWQCB) has identified San Jose Creek as impaired for the following:

- Chloride (source: channelization, industrial point sources, other urban runoff)
- Electrical conductivity (source: channelization, industrial point sources, other urban runoff)
- Enterococcus (source: industrial point sources, natural sources, other urban runoff)
- Escherichia coli (e. coli) (source: industrial point sources, natural sources, other urban runoff)

- Fecal coliform (source: industrial point sources, natural sources, other urban runoff)
- pH (source: unknown)
- Sodium (source: channelization, industrial point sources, other urban runoff)

Existing primary pollutants of concern are provided in Table 1 below. The project falls within the Construction Sites and Streets and Highways categories. As such the primary pollutants of concern consist of: salinity, pH, temperature, pesticides, herbicides, PCBs, oil/grease, solvents, lead, copper, zinc, cadmium, plant debris, animal waste, petroleum hydrocarbons, heavy metals, sediments, oxygen demanding substances, and floatables.

2.2 GROUNDWATER

The project is located within the Goleta Groundwater Basin (Basin No. 3-16). The basin covers 14.4 square miles (9,210 acres) and is bounded on the west by the topographic divide east of Ellwood Canyon and on the southeast by the Modoc fault. The surface of the basin is drained by the Maria Ygnacio, Atascadero, San Antonio, San Jose, and Carneros Creeks. Average precipitation for the basin is about 17 inches.

2.3 FLOOD HAZARDS

The Hollister Avenue Bridge Replacement Project includes widening the San Jose Creek channel immediately downstream of the new bridge so that the channel will convey 100-year flood flows, as a part of the San Jose Creek Capacity Improvement and Fish Passage Project. The project is in known flood hazard areas and construction is within the floodway as shown on the Federal Emergency Management Agency Flood Insurance Rate Map panel 06083C1326G (Appendix A). The floodway is the channel of a stream plus any adjacent floodplain areas that must be kept free of encroachment so that the 1-percent annual chance flood can be carried without substantial increases in flood heights. The base flood elevations range from approximately 34 to 37 feet within the project limits. The design of the bridge and channel walls will conform to the approved Conditional Letter of Map Revision (CLOMR) that included the bridge replacement work and was submitted as part of the San Jose Creek Capacity Improvement and Fish Passage Project.

TABLE 1
RELATIONSHIP OF SOURCES TO PRIMARY POLLUTANTS OF CONCERN

	Primary Pollutants of Concern in Urban Runoff[1]								
Pollutant Source/ Activity	**Physical Parameters[2]**	**Synthetic Organics[3]**	**Petroleum Hydrocarbons[4]**	**Heavy Metals[5]**	**Nutrients**	**Pathogens**	**Sediments**	**Oxygen-demanding Substances[6]**	**Floatables[7]**
Vehicle service facilities		●	●	●					
Gas stations		●	●	●					
Fetal fabrication shops		●	●	●					
Restaurants									●
Auto wrecking yards	●	●	●	●					
Mobile cleaners		●							
Parking lots	●		●	●					●
Residential dwellings	●	●		●	●	●	●	●	
Parks/open spaces					●	●	●	●	●
Construction sites	●						●	●	
Corporation yards	●	●	●	●					
Streets and highways	●		●	●				●	●
Marinas									●
Golf courses		●			●		●	●	
Sewer overflows	●					●		●	

Source: County of Santa Barbara Stormwater Management Program, CEQA Guidelines.

1 Adapted from *Model Urban Runoff Program*. July 1998. City of Monterey, City of Santa Cruz, California Coastal Commission, Monterey Bay National Marine Sanctuary, Association of Monterey Bay Area Governments, Woodward-Clyde, and Central Coast Regional Water Quality Control Board. EPA Assistance Agreement No. C9-999266-95-0.

2 Salinity, pH, temperature.

3 Pesticides, herbicides, PCBs.

4 Oil, grease, solvents.

5 Lead, copper, zinc, cadmium.

6 Plant debris, animal waste.

7 Litter, yard wastes.

SECTION 3.0
REGULATORY BACKGROUND

In accordance with the Federal Water Pollution Prevention and Control Act (i.e., the Clean Water Act or CWA) requirements state that discharges do not substantially degrade the physical, chemical or biological integrity of the nation's waters. Specifically, Section 402 established the National Pollutant Discharge Elimination System (NPDES) Regulations for wastewater and other pollutant discharges.

Congress amended the CWA in 1987 to require the implementation of a two-phased program to address project discharges. Phase I, promulgated by the U.S. Environmental Protection Agency (EPA) in November 1990, requires NPDES permits for project discharges from municipal separate storm sewer systems (MS4) serving populations of 100,000 or greater, construction sites disturbing greater than 5 acres of land, and ten categories of industrial activities.

Despite the comprehensiveness of the NPDES Phase I program, the EPA recognized that smaller construction projects (disturbing less than 5 acres) and small MS4s were also contributing substantially to pollutant discharges nationwide. Therefore, in order to further improve project quality, the EPA promulgated the NPDES Phase II program (Federal Register Vol. 64, No. 235, December 8, 1999). The Phase II regulations became effective on February 7, 2000, and require NPDES permits for project discharges from regulated small MS4s and for construction sites disturbing more than 1 acre of land. The Phase II regulations published by the EPA designated the urbanized areas of Santa Barbara County, including the City of Goleta, as a regulated small MS4.

In addition, Section 401 and 404 established regulations for the discharge of dredged or fill material into waters of the United States and water quality impacts associated with these discharges. In California, the Porter-Cologne Water Quality Control Act establishes waste discharge standards pursuant to the Federal NPDES program, and the state has the authority to issue NPDES permits to individuals, businesses, and municipalities.

SECTION 4.0
EVALUATION OF POTENTIAL WATER QUALITY IMPACTS

Guidelines for assessing project-specific and cumulative water quality impacts are presented below. The assessment of impacts must account for construction-related impacts (i.e., vegetation removal, erosion, use of construction materials on the site, and staging of construction activities) and post-construction (or post-development) impacts (i.e., increases in impervious surfaces and increased runoff, entrainment of pollutants, and effects of discharges on aquatic habitats and biota).

4.1 CONSTRUCTION

Polluted project runoff from construction sites often flows to storm drains and ultimately is discharged into local rivers and streams. Of the pollutants listed below, sediment is usually the main pollutant of concern. Pollutants commonly discharged from construction sites include:

- Sediment
- Pesticides
- Solid and sanitary wastes
- Concrete truck washout
- Nitrogen (fertilizer)
- Construction chemicals
- Phosphorous (fertilizer)
- Construction debris

4.2 POST-CONSTRUCTION

The following land uses and projects are generally presumed to have a less than significant project-specific water quality impact. These include:

- Redevelopment projects that do not increase the amount of impervious surfaces on the site nor change the land use or potential pollutants
- New development and redevelopment projects that incorporate into the project design construction BMPs for erosion, sediment and construction waste control and incorporate post-construction BMPs to protect sensitive riparian or wetland resources, reduce the quantity of runoff, and treat runoff generated by the project to pre-project levels
- Lot line adjustments that do not alter the development potential of the lots involved

- Development of a single family dwelling (and associated accessory uses including but not limited to roads and driveways, septic systems, guesthouse, pool, etc.) disturbing less than one acre on existing legal lot

The Hollister Avenue Bridge Replacement Project is a redevelopment project that will incorporate construction and post-construction BMPs to protect sensitive riparian or wetland resources, reduce or maintain the quantity of runoff, and treat runoff generated by the project to pre-project levels.

Because of the City of Goleta's designation under the Phase II NPDES regulations, all discretionary projects (except those that do not result in a physical change to the environment) within the urbanized area whose contributions are cumulatively considerable must implement one or more best management practices to reduce their contribution to the cumulative impact.

If water quality impacts are considered from the beginning stages of a project more opportunities are available for water quality protection. Best management practices (mitigation measures) chosen for a project should minimize water quality impacts and attempt to maintain pre-development runoff conditions. BMPs are divided into two main categories; non-structural BMPs and structural BMPs.

Non-structural BMPs are preventative actions that involve management and source controls such as protecting and restoring sensitive areas such as wetlands and riparian corridors, maintaining and/or increasing open space, providing buffers along sensitive water bodies, minimizing impervious surfaces and directly connected impervious areas, and minimizing disturbance of soils and vegetation. Structural BMPs include: storage practices such as wet ponds and extended-detention outlet structures; filtration practices such as grassed swales, sand filters and filter strips; and infiltration practices such as infiltration basins and infiltration trenches. In many cases combinations of non-structural and structural measures will be required to reduce water quality impacts.

Note that the State Water Resources Control Board (SWRCB) and the Central Coast RWQCB have recently adopted new regulations for development. Resolution R3-2013-0032 was adopted in July 2013 and specifies the requirements for post-construction stormwater management. The Hollister Avenue Bridge Replacement Project will be regulated under this resolution because it is a project that creates and/or replaces at least 2,500 square feet of impervious surface. The Hollister Avenue Bridge Replacement Project will not violate any water quality standards or waste discharge requirements.

The requirements are such that the project site shall:

i) Limit disturbance of creeks and natural drainage features

ii) Minimize compaction of highly permeable soils

iii) Limit clearing and grading of native vegetation at the site to the minimum area needed to build the project, allow access, and provide fire protection

iv) Minimize impervious surfaces by concentrating improvements on the least-sensitive portions of the site, while leaving the remaining land in a natural undisturbed state

v) Minimize stormwater runoff by implementing one or more of the following site design measures:

(1) Direct roof runoff into cisterns or rain barrels for reuse (N/A)

(2) Direct roof runoff onto vegetated areas safely away from building foundations and footings, consistent with California building code (N/A)

(3) Direct runoff from sidewalks, walkways, and/or patios onto vegetated areas safely away from building foundations and footings, consistent with California building code

(4) Direct runoff from driveways and/or uncovered parking lots onto vegetated areas safely away from building foundations and footings, consistent with California building code

(5) Construct bike lanes, driveways, uncovered parking lots, sidewalks, walkways, and patios with permeable surfaces

SECTION 5.0
WATER QUALITY COMPLIANCE REQUIREMENTS

5.1 CONSTRUCTION

The proposed project disturbed area is less than 1 acre and is therefore not subject to the SWRCB Construction General Permit (Order No. 2009-0009-DWQ and associated amendments). However, the project shall implement construction-related stormwater BMPs in compliance with SWRCB/RWQCB Resolution R3-2013-0032.

5.2 POST CONSTRUCTION

5.2.1 Surface Water

The project will be required to comply with new Low Impact Development regulations per Central Coast RWQCB and small MS4 Permit.

5.2.2 Groundwater

The project will be required to comply with new Low Impact Development regulations per Central Coast RWQCB and small MS4 Permit.

5.2.3 Flooding

The project is required to comply with City of Goleta and FEMA regulations for development within the floodplain and floodway. The design of the bridge and channel walls will conform to the approved CLOMR that included the bridge replacement work and was submitted as part of the San Jose Creek Capacity Improvement and Fish Passage Project.

SECTION 6.0
CEQA/NEPA EVALUATION

The following evaluation is provided to assist in CEQA/NEPA evaluation of the project from a hydrology/water quality impact perspective:

- With implementation of construction and post-construction BMPs, the project will not violate any water quality standards or waste discharge requirements.
- The project will not deplete groundwater supplies or interfere substantially with groundwater recharge (no proposed groundwater use).
- The project will alter the existing drainage pattern of San Jose Creek in a beneficial manner by increasing the flood capacity of the Hollister Avenue Bridge. With proper implementation of construction and post-construction BMPs, this alteration will not result in substantial erosion or siltation on-site or off-site. The project will not change the course of the drainage.
- The project purpose is to reduce flooding in the project vicinity by increasing flood conveyance capacity of the existing bridge. The project will alter the existing drainage pattern; however, based on the project purpose, the project will not increase the rate or amount of surface runoff in a manner which would result in flooding on- or off-site.
- The proposed project will not create or contribute runoff water that would exceed the capacity of existing or planned stormwater drainage systems or provide substantial sources of polluted runoff.
- With implementation of construction and post-construction BMPs, the project will not degrade water quality.
- The project will not place housing within a 100-year flood hazard area.
- The project intends to reconstruct a bridge within the existing 100-year floodplain/floodway with the intention of increasing flood capacity. Flows may be redirected with the goal of increasing flood capacity of the existing bridge and channel.
- The project will not expose people or structures to a significant risk of loss involving flooding, including flooding as a result of a failure of dam or levee. The project purpose is to increase flood capacity of the bridge and channel.
- The project is not subject to inundation due to seiche or tsunami. Mudflow/debris flow will be incorporated (as necessary) into the proposed bridge design (freeboard).

SECTION 7.0
REFERENCES

California Regional Water Quality Control Board. 2010. 2010 Integrated Report (Clean Water Act Section 303(d) List / 305(b) Report) http://www.sbprojectcleanwater.org/.

California Regional Water Quality Control Board, Central Coast Region. July 12, 2013. Resolution No. R3-2013-0032.

County of Santa Barbara. 2002. County of Santa Barbara Stormwater Management Program, Surface and Storm Water Quality Guidelines.

Federal Emergency Management Agency. 2012. Flood Insurance Study, County of Santa Barbara, Flood Insurance Rate Map Number 06083C1362G dated December 4, 2012.

APPENDIX A
FEDERAL EMERGENCY MANAGEMENT AGENCY FLOOD INSURANCE RATE MAP PANEL 06083C1326G

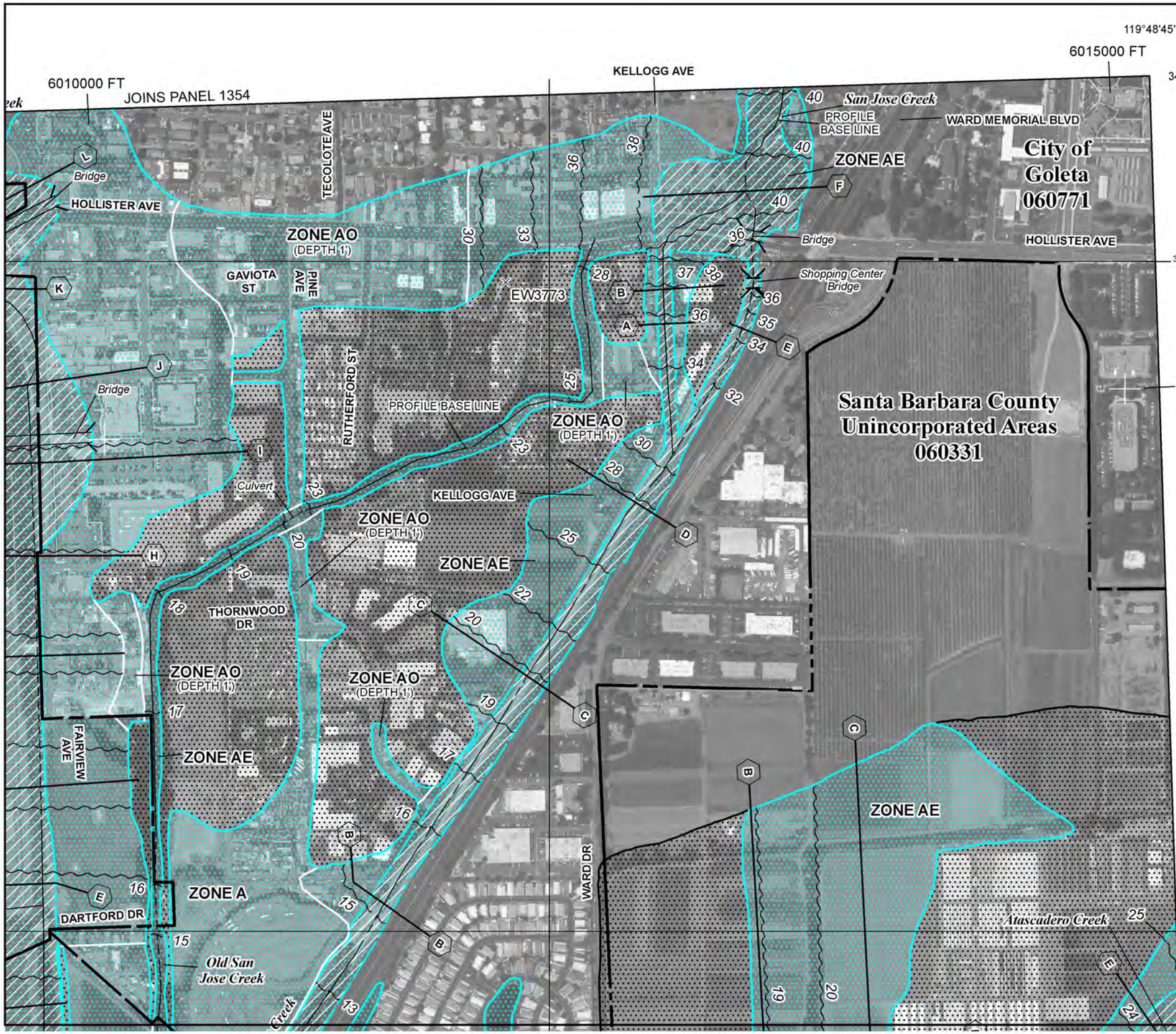

MAP SCALE 1" = 500'

250 0 250 500 750 1,000 FEET

0 0 150 300 METE

LEGEND

SPECIAL FLOOD HAZARD AREAS SUBJECT TO INUNDATION BY THE 1% ANNUAL CHANCE FLOOD

The 1% annual chance flood (100-year flood), also known as the base flood, is the flood that has a 1% chance of being equaled or exceeded in any given year. The Special Flood Hazard Area is the area subject to flooding by the 1% annual chance flood. Areas of Special Flood Hazard include Zones A, AE, AH, AO, AR, A99, V, and VE. The Base Flood Elevation is the water-surface elevation of the 1% annual chance flood.

ZONE A	No Base Flood Elevations determined.
ZONE AE	Base Flood Elevations determined.
ZONE AH	Flood depths of 1 to 3 feet (usually areas of ponding); Base Flood Elevations determined.
ZONE AO	Flood depths of 1 to 3 feet (usually sheet flow on sloping terrain); average depths determined. For areas of alluvial fan flooding, velocities also determined.
ZONE AR	Special Flood Hazard Area formerly protected from the 1% annual chance flood by a flood control system that was subsequently decertified. Zone AR indicates that the former flood control system is being restored to provide protection from the 1% annual chance or greater flood.
ZONE A99	Areas to be protected from 1% annual chance flood event by a Federal flood protection system under construction; no Base Flood Elevations determined.
ZONE V	Coastal flood zone with velocity hazard (wave action); no Base Flood Elevations determined.
ZONE VE	Coastal flood zone with velocity hazard (wave action); Base Flood Elevations determined.

FLOODWAY AREAS IN ZONE AE

The floodway is the channel of a stream plus any adjacent floodplain areas that must be kept free of encroachment so that the 1% annual chance flood can be carried without substantial increases in flood heights.

OTHER FLOOD AREAS

ZONE X	Areas of 0.2% annual chance flood; areas of 1% annual chance flood with average depths of less than 1 foot or with drainage areas less than 1 square mile; and areas protected by levees from 1% annual chance flood.

OTHER AREAS

ZONE X	Areas determined to be outside the 0.2% annual chance floodplain.
ZONE D	Areas in which flood hazards are undetermined, but possible.

COASTAL BARRIER RESOURCES SYSTEM (CBRS) AREAS

OTHERWISE PROTECTED AREAS (OPAs)

This is an official copy of a portion of the above referenced flood map. It was extracted using F-MIT On-Line. This map does not reflect changes or amendments which may have been made subsequent to the date on the title block. For the latest product information about National Flood Insurance Program flood maps check the FEMA Flood Map Store at www.msc.fema.gov

APPENDIX K
PUBLIC COMMENTS AND RESPONSES

URS
URS is an AECOM company.

March 11, 2015

Rosemarie Gaglione
Public Works Director
City of Goleta
130 Cremona Drive, Suite B
Goleta, CA 93117

Re: Responses to Public and MTD Comments on the Draft Initial Study/Mitigated Negative Declaration for the Hollister Avenue Bridge Replacement Project

Dear Ms. Gaglione:

Two comment letters were received on the Hollister Avenue Bridge Replacement Project Draft Initial Study/Mitigated Negative Declaration (IS/MND). These include a letter from Mr. Michael Goldman, a local resident, and a letter from Mr. George Amoon, Planning Manager for the Santa Barbara Metropolitan Transit District (MTD). The comment letters are included herein (see Attachment A).

Both letters address concerns about traffic impacts and Mr. Goldman's letter also identifies a concern about diesel emissions. The paragraphs below address these comments, none of which affect the environmental setting, impact significance or mitigation measures identified in the Draft IS/MND. URS Corporation prepared the response to the comment on air quality emissions while Drake Haglan & Associates and Kittleson & Associates prepared the responses to comments regarding traffic issues.

1.0 MTD Comment and Response

Summary of Comment on Bus Stop Closures: MTD indicates the project may result in impacts including closure to one or more bus stops along Hollister Avenue and may cause traffic delays during construction.

Response: Thank you for the information. The construction of the new bridge on Hollister Avenue over San Jose Creek is being planned to be constructed along with the previously approved improvements to the Hollister Avenue/State Route 217 (SR-217) interchange modifications. The interchange modifications will convert the existing signalized intersections of Hollister Avenue with the SR-217 on- and off-ramps, and Ward Drive, to roundabouts. The construction of the roundabout on Hollister Avenue at the SR-217 on-ramp/Ward Drive will require the permanent removal and possible MTD relocation of the

URS Corporation
130 Robin Hill Road, Suite 100
Santa Barbara, CA 93117
Tel: 805.692.0600
Fax: 805.964.0259

existing MTD bus stop on westbound Hollister Avenue just east of the State Route 217 undercrossing because the bus stop would be within the circulatory roadway of the roundabout and thus would interfere with its operation. This bus stop will need to be closed with the initial phase of construction, as the first order of work for converting the signalized intersection into the roundabout will be in the vicinity of the bus stop. As the comment letter notes, public transit passengers would be diverted to the closest available bus stop. There may also be delays for busses traveling through the interchange area due to short term and long term lane closures required for the construction of the roundabouts and new bridge.

2.0 Mr. Goldman's Comments and Responses

Summary of Comment on Traffic Impacts to Residents on Dearborn Place: Mr. Goldman and his neighbors in the La Goleta Condominiums on Dearborn Place strongly object to the current construction scenario, which would result in the extended closure of one westbound lane along Hollister Avenue. Mr. Goldman indicates that westbound Hollister Avenue is the only exit for residents on Dearborn Place and project construction would cause traffic to substantially back up along Dearborn Place. The comment requests the project keep both westbound lanes open for the duration of the project and instead close one of the eastbound Hollister Avenue lanes between Kellogg Avenue and SR-217.

Response: Thank you for your comment. Westbound Hollister Avenue will be reduced to one-lane only during the construction Phase 1B, which is anticipated to last approximately 6-9 months. Westbound Hollister Avenue will be maintained as two lanes during all other construction phases. The traffic analysis looked at the most conservative approach and analyzed traffic implications during Phase 1B. The traffic model predicted that about 13 percent of the existing traffic in AM peak on westbound Hollister Avenue at Dearborn Place will divert to some other route, primarily to US 101. Motorists leaving Dearborn Place along westbound Hollister Avenue during the AM peak therefore are expected to experience less total traffic compared to existing (pre-construction) conditions. With the SR-217 southbound on-ramp closure, PM peak traffic destined to Dearborn Place are expected to experience about 25 percent less traffic east of SR-217 southbound ramps. Relative to the baseline (i.e. no construction) conditions, the intersection of Hollister Avenue/SR-217 southbound ramps was projected to operate at better level of service grades with one westbound Hollister Avenue lane and SR-217 southbound on-ramp closure. In addition, two lanes are needed on eastbound Hollister Avenue to provide the necessary storage for anticipated queues of traffic between Kellogg Avenue and the southbound SR-217 on- and off-ramps in the PM peak hour. Conversely, only one lane is needed on westbound Hollister Avenue to provide the necessary storage for the anticipated queues of traffic between Kellogg Avenue and the northbound SR-217 on-ramp/Ward Drive intersection in both the AM and PM peak hours.

Summary of Comment on Air Quality Emissions: The comment recognizes the Draft IS/MND states that emissions of particulate matter (during construction) is an unavoidable but mitigable impact of the proposed project but Mr. Goldman states that the Draft IS/MND does not mention or quantify the toxic effects of this particulate matter, which is diesel particulate matter, a carcinogen. The comment recommends that all diesel equipment be required to meet the latest EPA Tier fuel standards or be modified to include diesel particulate filters.

Response: Thank you for the comment. The Criteria Pollutants Emissions Technical Memorandum and IS/MND prepared for the proposed Hollister Avenue Bridge Replacement Project were developed in accordance with the City of Goleta's Environmental Review Guidelines, which refer to the County of Santa Barbara Environmental Thresholds and Guidelines Manual. The guidelines outline the air quality thresholds of significance for the City and guidelines for calculating emissions. The guidelines were developed in accordance with the California Environmental Quality Act (CEQA) Guidelines. By definition, "a significant adverse air quality impact may occur when a project, individually or cumulatively, triggers one of the following:

- Interferes with progress toward the attainment of the ozone standard by releasing emissions which equal or exceed the established long-term quantitative thresholds for NOx and ROG;

- Equals or exceeds the state or federal ambient air quality standards for any criteria pollutant (as determined by modeling)"

County of Santa Barbara guidelines specifically state to quantify criteria pollutant emissions for the construction and operation of the project, which was done. However, the guidelines only address toxic air pollutant emissions from sources that would emit these activities during their operation, such as gas stations, dry cleaners, medical sterilization, rubber/plastic fabrication, and landfills, for example. The guidelines do not direct or recommend estimating toxic air pollutant emissions from construction activities as they are temporary and short in duration compared to the lifespan of the project. In fact the emissions of concern from construction according to the guidance include PM10 from dust, NOx, and ROG, but not toxic air pollutants. Therefore, the Technical Memorandum and Draft IS/MND accurately described the emissions estimated with this project in accordance with the CEQA, County of Santa Barbara, and City of Goleta guidelines. No additional mitigation measures are required.

Please contact me if you have additional questions. Thank you.

Sincerely,
URS Corporation

Craig Woodman
Principal Project Manager

Attachment A: Comment Letters

cc: Gerald Comati (Comm3 Consulting)
Craig Drake (Drake Haglan & Associates)
Laura Bridley (Planning Consultant)

ATTACHMENT A

COMMENT LETTERS

Via E-Mail

January 19, 2015

City of Goleta
Public Works Department
130 Cremona Drive, Suite B
Goleta, CA 93117

Attn: Rosemarie Gaglione

RE: Hollister Avenue Bridge Replacement Project
Draft Mitigated Negative Declaration Case No. 14-074-MND

Ms. Gaglione,

Thank you for the opportunity to comment of the above referenced project. I am resident of the La Goleta Condominiums on Dearborn Place. My neighbors and I will be directly impacted by the proposed project. Our specific concerns are primarily (1) significant delays and traffic due to the closure of one of the westbound lanes on Hollister Avenue from HWY 217 to Kellogg Avenue and (2) the unmitigated release of toxic diesel emissions into the air we breathe from the many diesel engines that will be used for this project.

Traffic: There are well over 300+ residences on Dearborn Place. We have only one exit and that is westbound into the two lane of Hollister Avenue towards Kellogg Avenue. Similarly, we only have one entrance and that is from westbound Hollister Avenue. We strongly object to the proposed project where one of the two westbound lanes will be closed for an extended period of time. This will cause an incredible amount of traffic backing up on Dearborn Place and Hollister Avenue during morning, lunch and late afternoon hours. The last time this stretch of Hollister was closed was for slurry seal work a few years ago. Traffic was backed up to the St. Josephs Street and it took literally 20 minutes to get from St. Josephs to Dearborn Place. This will making ingress and egress for the 300+ residents on Dearborn Place a nightmare for an extended period of time. This is unacceptable. **We strongly request that the project be modified to keep the two westbound Hollister Avenue lanes open for the duration of the project and, instead, close one of the eastbound Hollister Avenue lanes between Kellogg Avenue and HWY 217**. This makes more sense since the HWY 217 Southbound onramp from Hollister Avenue will be closed, thus allowing for smoother flow of traffic in the eastbound direction and making it a better choice for lane reduction. Removing one of the westbound Hollister Avenue lanes will interrupt traffic flow significantly. This area has two traffic impediments not seen on the eastbound lanes. First, we have traffic entering from HWY 217 to Hollister Avenue and second, we have traffic slowing down to turn right onto Dearborn Place. It simply makes more sense to keep the westbound Hollister lanes open and to close one of the eastbound lanes instead. Its common sense that no traffic model will tell you. Making this change will mitigate the traffic impacts on our residents and other residents trying to get into Old Town.

Unmitigated Air Toxics Emissions: The draft Mitigated Negative Declaration identifies particulate matter as an unavoidable, but mitigable impact (as a criteria pollutant). What the document fails to mention anywhere is that this particulate matter is “diesel particulate matter” which is a potent carcinogen. Further, the document fails to quantify what the toxic impacts will be from this project to

the nearby residents. The State of California has identified diesel particulate matter as a significant pollutant and has taken many steps to address it. So why does this draft environmental document fail to even mention air toxics such as diesel exhaust? Section 12.3 of the document states that the particulate matter can be reduced to less than significant with the proposed mitigation. If it does then we are okay with the project as proposed. However, and again, we can find nowhere in the draft environmental document where the impact and the proposed mitigation is quantified such that your claim of insignificance can have a basis. Worse, the proposed mitigation do not list any specific mitigation requirements. Rather they simply point to other agency requirements and nothing specific is spelled out for this specific project. This gives the reader the impression that emission controls will be used to reduce the diesel particulate matter. **We strongly recommend that the mitigation conditions be revised to require all diesel equipment to meet to latest EPA Tier standards or that the equipment be modified to have add on diesel particulate filters (DPF) added**. This requirement must be added to all contract requirements in the form of a "shall be used" as opposed to the totally unenforceable and meaningless language of "…should be used whenever possible" as is it worded in the draft document. In summary, the proposed diesel particulate emission mitigation requirements are vague and non-specific to the point that they are meaningless. Specific emission control requirements and mitigation language is needed to protect the residents. Otherwise, there is not real mitigation being proposed and the City should then do a full EIR and let the City Council make a determination that overriding considerations exist to approve this project.

Sincerely,

Michael Goldman
41 Dearborn Place #70
Goleta CA, 93117

MTD Santa Barbara
Metropolitan Transit District
550 Olive Street
Santa Barbara, CA 93101
p (805) 963-3364
f (805) 963-3365
www.sbmtd.gov

January 13, 2015

Ms. Rosemarie Gaglione
Public Works Director
City of Goleta
130 Cremona Drive, Suite B
Goleta, CA 93117

RE: Hollister Avenue Bridge Replacement Project Mitigated Negative Declaration Comments

Dear Ms. Gaglione:

Thank you for the opportunity to comment on the Hollister Avenue Bridge Replacement Project Mitigated Negative Declaration (MND). In regard to construction detours, please note that there are bus stops on Hollister Avenue in both directions just west of Kellogg Avenue and in the westbound direction slightly east of the Highway 217 bridge.

If the construction detour is limited to the area between the Highway 217 westbound on and off ramps and Kellogg Avenue, there should not be any bus stop closures as bus stops do not exist within that stretch of Hollister Avenue. If the construction detour extends to Kinman Avenue and/or Ward Drive, it will likely result in the closing of one or more of the aforementioned bus stops. This would result in public transit passengers being diverted to the closest available bus stop.

Also, if traffic is limited to one lane in each direction along Hollister Avenue as a result of the detour, a bus stopped to load or unload passengers may cause through traffic to be delayed.

Hollister Avenue through the city of Goleta Old Town is one of the most highly used transit corridors in the District, served by four routes. As such, we thank you again for your outreach and look forward to coordinating with your staff regarding construction detour timing.

I can be reached at (805) 963-3364 if you have any questions or concerns regarding these comments.

Sincerely,

George Amoon

George Amoon
Planning Manager

Cc: Jerry Estrada, General Manager

APPENDIX L
MITIGATION MONITORING AND REPORTING PROGRAM

Appendix L
HOLLISTER AVENUE BRIDGE REPLACEMENT PROJECT
MONITORING AND REPORTING PROGRAM

Mitigated Negative Declaration for
Case No. 14-074-MND

Mitigation Measure	Responsible Party Obligation	Time Frame	Monitoring Party
Air Quality			
AQ-1 All portable diesel-powered construction equipment over 50 horsepower ~~shall~~ must be registered with the ~~state's portable equipment registration program~~Statewide Portable Equipment Registration Program (PERP) OR ~~shall~~ obtain an SBCAPCD permit.	The contractor must ensure that all portable diesel-powered construction equipment over 50 horsepower comply with mitigation measure AQ-1.	These requirements ~~shall~~ must be included in construction contract documents and specifications.	Public Works Director (PWD), or designee~~PWD~~
AQ-2 Fleet owners of mobile construction equipment ~~are subject to the CARB Regulation for In-use Off-road Diesel Vehicles (Title~~must comply with 13 California Code of Regulations (CCR), ~~Chapter 9,~~ § 2449~~)~~ regulating off-road diesel vehicles), ~~the purpose of which is~~ to reduce diesel particulate matter (PM) and criteria pollutant emissions from in-use (existing) off-road diesel-fueled vehicles.	The contractor must ensure that all mobile construction equipment comply with mitigation measure AQ-2.	These requirements ~~shall~~ must be included in construction contract documents and specifications.	PWD, or designee ~~PWD~~
AQ-3 All commercial diesel vehicles ~~are subject to Title 13, §~~ must comply with 13 CCR § 2485 ~~of the California Code of Regulations,~~ limiting engine idling time. Idling of heavy-duty diesel construction equipment and trucks during loading and unloading ~~shall be~~is limited to five minutes; electric auxiliary power units should be used whenever possible.	The contractor must ensure that all commercial diesel vehicles limit idling to comply with mitigation measure AQ-3.	These requirements ~~shall~~ must be included in construction contract documents and specifications.	PWD, or designee~~PWD~~

Mitigation Measure	Responsible Party Obligation	Time Frame	Monitoring Party
AQ-4 If the construction site is graded and left undeveloped for over four weeks, the City or its qualified contractor ~~shall employ~~must utilize the following methods immediately to inhibit dust generation: a) Seeding and watering to revegetate graded areas; and/or b) Spreading of soil binders; and/or c) Any other methods deemed appropriate by the ~~Community Services~~Public Works Director, or designee, and in accordance with the Contract Special Provisions and the Caltrans Standard Specifications. ~~The City's construction manager or representative shall perform periodic site inspections to verify compliance as well as contact the designated monitor as necessary to ensure compliance with dust control measures. City of Goleta, Public Works Department staff shall ensure specifications are printed on construction plans.~~	The contractor must ensure that all grading activities to comply with mitigation measure AQ-3 to inhibit dust generation. The City's construction manager or representative shall perform periodic site inspections to verify compliance as well as contact the designated monitor as necessary to ensure compliance with dust control measures.	These requirements ~~shall~~ must be included in construction contract documents and specifications.	PWD, or designee~~PWD~~
AQ-5 The City or its qualified contractor ~~shall~~ must submit to the SBCAPCD a completed Asbestos Demolition/Renovation Notification form and comply with the National Emission Standards for Hazardous Air Pollutants-Asbestos for all demolition activities. Demolition notifications are required regardless of whether asbestos is present or not. The completed notification should be presented or mailed to the SBCAPCD within a minimum of 10 working days advance notice ~~prior~~ before ~~to~~ disturbing asbestos in a renovation or starting work on a demolition to comply.	The contractor ~~shall~~ must provide written verification that a completed Asbestos Demolition/Renovation Notification form has been submitted to the SBCAPCD.	These requirements ~~shall~~ must be included in construction contract documents and specifications. These requirements ~~shall~~ must be met ~~prior to~~before the start of demolition.	~~PWD~~City construction manager or representative SBCAPCD

Mitigation Measure	Responsible Party Obligation	Time Frame	Monitoring Party
AQ-6 Dust generated by construction and/or demolition activities ~~shall~~ must be kept to a minimum in accordance with the current edition of the California Department of Transportation (Caltrans) Standard Specifications, §~~Section~~ 14-9.03 and ~~Air Quality District~~SBCAPCD Rule 345. The following dust control measures ~~listed below shall~~must be implemented by the contractor: a) During clearing, grading, earth moving, excavation, or transportation of cut or fill materials, water trucks or sprinkler systems are to be used to prevent dust from leaving the site and to create a crust after each day's activities cease. b) During construction, water trucks or sprinkler systems shall be used to keep all areas of vehicle movement damp enough to prevent dust from leaving the site (dust emissions at the property line ~~shall~~ cannot exceed 20 percent opacity more than an aggregate of 3 minutes in any 60 minute period). At a minimum, this would include wetting down such areas in the late morning and after work is completed for the day. Increased watering frequency ~~shall~~ must occur whenever wind exceeds 15 miles per hour (mph). If wind speeds increase to the point when such measures cannot prevent dust from leaving the site, construction activities ~~shall~~ must be suspended.	City of Goleta, Public Works Department or the contractor is obligated to comply with mitigation measure AQ-6. The City's construction manager or representative must perform periodic site inspections to verify compliance as well as contact the designated monitor as necessary to verify compliance with dust control measures. The City's construction manager or representative ~~shall~~ must ensure that the construction contractor designates a person or persons to monitor the dust control program and to order increased watering as necessary to prevent transport of dust off-site. Their duties ~~shall~~ must include holiday and weekend periods when work may not be in progress.	All of the requirements ~~shall~~ must be included in the construction contract documents and specifications. Dust control measures shall be implemented by the contractor during construction and during ~~clearing,~~clearing; grading, earth moving, excavation, or transportation of cut or fill materials.	~~PWD~~PWD, or designee

Mitigation Measure	Responsible Party Obligation	Time Frame	Monitoring Party
AQ-6 (cont.) c) Grading and scraping operations ~~shall~~ must be suspended when wind speeds exceed 20 mph. d) Gravel pads, knock-off plates, or similar BMPs ~~shall~~ must be installed at all access points to the project site to prevent tracking of mud onto roadways. e) Soil stockpiled for more than two days ~~shall~~ must be covered, kept moist, or treated with soil binders to prevent dust generation. Trucks transporting soil material to and from the site ~~shall~~ must be tarped from the point of origin. f) All gravel, dirt, and construction material ~~shall~~ must be cleaned from the right-of-way at a minimum of once a day at the end of the work day. g) After clearing, grading, earth moving, and/or excavation is complete, the disturbed area ~~shall~~ must be treated by watering, or revegetating, or by spreading soil binders until the area is paved or otherwise developed in a manner that prevents dust generation. ~~City's construction manager or representative shall perform periodic site inspections to verify compliance as well as contact the designated monitor as necessary to verify compliance with dust control measures.~~ ~~The City's construction manager or representative shall ensure that the construction contractor designates a person or persons to monitor the dust control program and to order increased watering as necessary to prevent transport of dust off-site. Their duties shall include holiday and weekend periods when work may not be in progress.~~	(See above)	(See above)	(See above)

Mitigation Measure	Responsible Party Obligation	Time Frame	Monitoring Party
AQ-7 Grading and construction contracts must specify that contractors ~~shall~~ adhere to the requirements that reduce emissions of ozone precursors and particulate emissions from diesel exhaust: a) Diesel construction equipment meeting the CARB Tier 1 emission standards for off-road heavy-duty diesel engines ~~shall~~ must be used. Equipment meeting CARB Tier 2 or higher emission standards should be used to the maximum extent feasible. b) Diesel powered equipment should be replaced by electric equipment whenever feasible. c) If feasible, diesel construction equipment ~~shall~~ must be equipped with selective catalytic reduction systems, diesel oxidation catalysts, and diesel particulate filters as certified and/or verified by CARB or the EPA. d) Catalytic converters ~~shall~~ must be installed on gasoline-powered equipment, if feasible. e) All construction equipment ~~shall~~ must be maintained ~~in tune~~ per ~~the~~ manufacturer's specifications. f) Construction equipment operating simultaneously ~~shall~~ must be minimized through efficient management practices to ensure that the smallest practical number is operating at any one time. ~~City's construction manager or representative shall verify construction emission requirements are included in all construction specifications.~~	City of Goleta, Public Works Department or the contractor is obligated to comply with mitigation measure AQ-7 to reduce emissions of ozone precursors and particulate emissions from diesel exhaust. The City's construction manager or representative must verify construction emission requirements are included in all construction specifications.	All of the requirements ~~shall~~ must be included in the construction contract documents and specifications.	~~PWD~~PWD, or designee

Mitigation Measure	Responsible Party Obligation	Time Frame	Monitoring Party
AQ-8 Diesel fuel emissions ~~shall be~~are limited. The following limitations on diesel-fueled vehicles in excess of 10,000 pounds ~~shall~~ apply during all construction and subsequent operational activities: a) Diesel-fueled vehicles in excess of 10,000 pounds ~~shall~~ cannot use diesel fueled auxiliary power units for more than five minutes to power heater, air conditioner, or other ancillary equipment on any such vehicle. These requirements ~~shall~~ must be included in the construction contract documents and specifications. The location and information provided on the sign(s) ~~shall~~ must be reviewed and approved by City's construction manager or representative prior to start of construction. ~~The City's construction manager or representative shall monitor in the field for compliance.~~	The contractor is obligated to comply with mitigation measure AQ-8 by limiting diesel-fueled vehicle use durations. The City's construction manager or representative ~~shall~~ must monitor in the field for compliance.	Prior to start of construction activities.	~~PWD~~PWD, or designee
AQ-9 Transport of all exported cut material from the project implementation ~~shall~~ must be tarped from the project site to the point of storage. ~~The City's construction manager or representative shall monitor in the field for compliance.~~	City of Goleta, Public Works Department or the contractor is obligated to comply with mitigation measure AQ-9 by tarping all exported cut material. The City's construction manager or representative ~~shall~~ must monitor in the field for compliance	This requirement ~~shall~~ must be included in construction contract documents and specifications.	~~PWD~~PWD, or designee

Mitigation Measure	Responsible Party Obligation	Time Frame	Monitoring Party
Biological Resources			
BIO-1 Coast Live Oaks and/or Western Sycamores should be avoided to the extent practicable. All Coast Live Oaks and Western Sycamores that cannot be avoided must be replaced at a ratio of 10:1 (trees planted to trees removed). The trees ~~shall~~ must be grown from local seed stock in 5-gallon containers and planted north of the Hollister Avenue Bridge at approximately 20-foot spacing or greater. Seed collection and cultivation ~~shall~~ must be initiated before construction starts, or as soon as practicable. These trees ~~shall~~ must be irrigated and weeded for at least three years (up to five years if necessary) and monitored for a total of five years. An annual monitoring report ~~shall~~ must be submitted to ~~the City~~the Planning and Environmental Review Director or designee, for review and approval. ~~Seed collection and cultivation shall be initiated before construction starts, or as soon as practicable. Planted trees shall be irrigated and weeded for at least three years (up to five years if necessary) and monitored for a total of five years. An annual monitoring report shall be submitted to the City for review and approval.~~ ~~A qualified biologist shall monitor seed collection, planting, irrigation and monitoring, and provide the City with a memorandum when plantings have been installed. Thereafter the biologist shall prepare an annual monitoring report for City review.~~	City of Goleta, Public Works Department or the contractor is obligated to comply with mitigation measure BIO-1 to avoid or restore Coast Live Oaks and/or Western Sycamores. A ~~qualified~~ city selected biologist ~~shall~~ must monitor seed collection, planting, irrigation and monitoring, and provide the City with a memorandum when plantings have been installed. Thereafter the biologist ~~shall~~ must prepare an annual monitoring report for City review.	Prior to start of construction activities or as soon as practicable. Specifications for replacement of Coast Live Oaks and Western Sycamores must be included in the Habitat Restoration Plan (see BIO_2). ~~Qualified~~ City selected biologist ~~shall~~ must prepare an annual monitoring report for City review for at least three years (up to five years if necessary).	~~PWD~~A biologist, selected by the City

Mitigation Measure	Responsible Party Obligation	Time Frame	Monitoring Party
BIO-2 A City-approved biologist ~~shall~~ must prepare and implement a riparian and oak woodland Habitat Restoration Plan. Habitat restoration would be located north of the Hollister Avenue Bridge. The restoration plan ~~shall~~ must include a list of species to be planted, their size and numbers of individuals to be planted (including any trees required in Mitigation Measure BIO-1). The restoration plan ~~shall~~ must include a schedule for implementation and performance standards including 75 percent survival at the end of 2 years and 65 percent at the end of 5 years. The plan ~~shall~~ must be submitted to the ~~City~~ Planning and Environmental Review Director, or designee, for review and approval. After approval, the plan shall be implemented. ~~Prior to construction, a City-approved biologist shall prepare the~~The Habitat Restoration Plan ~~for City review and approval. The Plan shall~~ must include a five-year monitoring component. A city selected biologist ~~shall~~ must monitor restoration and submit an annual monitoring report to the City. ~~The City will review and approve the Habitat Restoration Plan. The City will review each annual monitoring report.~~	City of Goleta, Public Works Department or the contractor is obligated to comply with mitigation measure BIO-2 having a City-approved biologist prepare a riparian and oak woodland Habitat Restoration Plan. The City will review and approve the Habitat Restoration Plan. The City will review each annual monitoring report.	~~Prior to start of construction activities~~Before constructing the project, a City-approved biologist ~~shall~~ must prepare the Habitat Restoration Plan for ~~City~~ Planning and Environmental Review Director, or designee, review and approval. ~~Qualified~~ A City approved biologist ~~shall~~ must prepare an annual monitoring report for City review for five years.	~~PWD~~ Planning and Environmental Review Director, or designee

Mitigation Measure	Responsible Party Obligation	Time Frame	Monitoring Party
BIO-3 The removal of arroyo willow thicket (*Salix lasiolepis* Shrubland Alliance) ~~shall~~ must be replaced at a 2:1 ratio~~.~~ (~~The~~ the exact acreage ~~shall~~ must be calculated based on final design plans~~.~~). Mitigation ~~shall~~ must include creation or enhancement of riparian habitat, such as through removal of giant reed (*Arundo donax*) currently growing within the northern portion of the API, within the Habitat Restoration Opportunity Zone. All native plants grown for the project ~~shall~~ must be grown from seed or cuttings that are obtained within the Goleta Slough watershed if available. ~~A biologist shall monitor the collection of seed and/or cuttings, and shall monitor the planting and weeding, and direct the timing of irrigation for five years. An annual report shall be prepared by the biologist and submitted to the City.~~	City of Goleta, Public Works Department or the contractor is obligated to comply with mitigation measure BIO-3 for removal of the arroyo willow thicket followed by restoration. A City selected biologist ~~shall~~ must monitor the collection of seed and/or cuttings, and ~~shall~~ monitor the planting and weeding, and direct the timing of irrigation for five years. An annual report ~~shall~~ must be prepared by the biologist and submitted to the ~~City~~Planning and Environmental Review Director, or designee.	Specifications to implement BIO-3 ~~shall~~ must be included in the Habitat Restoration Plan (see BIO-2). A ~~qualified~~ City selected biologist ~~shall~~ must provide the City with a memorandum when plantings have been installed. Thereafter the biologist ~~shall~~ must prepare an annual monitoring report for ~~City~~ Planning and Environmental Director, or designee review.	~~PWD~~Planning and Environmental Review Director, or designee

Mitigation Measure	Responsible Party Obligation	Time Frame	Monitoring Party
BIO-4 Removal of vegetation and initial dewatering of the creek (if necessary) ~~shall~~ must occur in the dry season, typically between May ~~15~~ and ~~September 15~~October. ~~A qualified biologist shall monitor removal of vegetation and dewatering of the creek and submit a report to the City at the end of the vegetation removal.~~	City of Goleta, Public Works Department or the contractor is obligated to comply with mitigation measure BIO-4 if warranted.	These limitations ~~shall~~ must be included in construction contract documents and specifications ~~City staff~~(Planning and Environmental Review Director or designee to verify), ~~to verify, w~~with the caveat that BIO-5 ~~shall~~ must be implemented if construction in the creek would occur while water is present.	~~PWD~~Planning and Environmental Review Director, or designee

Mitigation Measure	Responsible Party Obligation	Time Frame	Monitoring Party
BIO-5 If vegetation removal or other elements of project construction will occur while there is water in the creek, pre-construction surveys for California red-legged frog and other sensitive species shall be conducted by an approved biologist. If any red-legged frogs or other federally listed species are found, the project ~~shall~~ must be delayed until the U.S. Fish and Wildlife Service (USFWS) is consulted and a take avoidance strategy is developed. If no red-legged frogs are found, project construction may proceed. A biologist familiar with the species ~~shall~~ must be present during the vegetation removal. ~~Requirements shall be discussed with construction crews prior to construction. Any pre-construction surveys must be reviewed and approved by the City of Goleta prior to commencement of construction.~~ ~~A qualified biological monitor shall be present during vegetation removal and shall prepare daily monitoring logs of all observations. These logs shall be summarized into a weekly memo style report for submittal to the City.~~	City of Goleta, Public Works Department or the contractor is obligated to comply with mitigation measure BIO-5. A qualified biological monitor must be present during vegetation removal and prepare daily monitoring logs of all observations. Daily Logs must be summarized into a weekly memo style report for submittal to the Planning and Environmental Review Director, or designee.	This requirement will be included in construction contract documents and specifications and ~~City~~ Planning and Environmental Review Director, or designee~~staff~~ will verify. Requirements must be discussed with construction crews before construction. Any pre-construction surveys must be reviewed and approved by the Planning and Environmental Review Director, or designee, before commencement of construction.	~~PWD~~Planning and Environmental Review Director, or designee

Mitigation Measure	Responsible Party Obligation	Time Frame	Monitoring Party
BIO-6 If vegetation removal occurs during the bird breeding season (February 1 through August 31, or as determined by a qualified biologist based on observations in the field), pre-construction nesting bird surveys ~~shall~~ must be conducted by a qualified biologist once per week for three weeks ~~prior~~ before to vegetation removal. The biologist will determine the presence or absence of nesting birds in the area of direct disturbance, and will determine appropriate buffer areas from any nests. Any active nests found ~~shall~~ cannot be disturbed. A minimum of a 300-foot buffer ~~shall~~ must be applied to all active nests until the young of the year have left the nest. The buffer may be modified in consultation with the USFWS and the City, taking into account the species and the location of the nest relative to the disturbance area. Vegetation removal and construction within the buffers ~~shall~~ must be postponed until the young of the year have left the nest(s). ~~Any pre-construction nesting bird surveys must be reviewed and approved by the City of Goleta prior to commencement of construction. Results of the surveys will be discussed with construction personnel prior to construction.~~ Construction personnel must abide by all recommendations in the approved surveys, including any setbacks from active bird nests. ~~The monitor shall have the authority to stop work if necessary to avoid impacts to nesting birds. Weekly memo-style reports shall be submitted by the biologist to the City of Goleta and USFWS recording the activity regarding construction and breeding birds~~.	City of Goleta, Public Works Department or the contractor is obligated to comply with mitigation measure BIO-6, if vegetation removal is proposed during the breeding bird season. A biologist must be on-site throughout the entire period of vegetation removal; and must have the authority to stop work if necessary to avoid impacts to nesting birds. Weekly memo-style reports must be submitted by the biologist to the Planning and Environmental Review Director, or designee, and USFWS recording the activity regarding construction and breeding birds.	This requirement will be included in construction contract documents and specifications. Any pre-construction nesting bird surveys must be reviewed and approved by the Planning and Environmental Review Director, or designee, before commencement of construction. Results of the surveys will be discussed with construction personnel before construction. If vegetation is removed between February 1 and August 31, a biologist ~~shall~~ must be on-site throughout the entire period of vegetation removal.	~~PWD~~ Planning and Environmental Review Director, or designee USFWS

Mitigation Measure	Responsible Party Obligation	Time Frame	Monitoring Party
BIO-7 No netting ~~shall~~ can be used to exclude swallows from establishing nests under the bridge. A biologist ~~shall~~ must conduct a pre-construction survey under the bridge for swallow nests. If swallow nests are observed, they ~~shall~~ must be removed before they are completed in consultation with the USFWS. No nests that have been completed ~~shall~~ will be removed. If completed nests are present, no construction under the bridge ~~shall~~ can occur until the young of the year have left the nests, as determined by a survey conducted by a biologist. Results of the pre-construction survey and any recommendations and/or USFWS requirements will be summarized in a letter report and submitted to ~~the City for approval. A biologist shall monitor any nest removal. If completed nests are present, a biologist would conduct a survey to determine when the young of the year have left the nest. Results of that survey would be submitted to the City~~the Planning and Environmental Review Director, or designee for approval.	City of Goleta, Public Works Department or the contractor is obligated to comply with mitigation measure BIO-7. A biologist must monitor any nest removal. If completed nests are present, a biologist would conduct a survey to determine when the young of the year have left the nest.	These requirements will be included in construction contract documents and specifications. These requirements will be discussed with construction personnel ~~prior~~ before to construction to ensure they understand restrictions. Pre-construction nesting bird survey ~~shall~~ must be conducted.	~~PWD~~Planning and Environmental Review Director, or designee

Mitigation Measure	Responsible Party Obligation	Time Frame	Monitoring Party
BIO-8 A ~~qualified~~ City retained biologist ~~shall~~ must conduct a pre-construction day-time and a night time bat survey ~~prior to~~before bridge demolition. If bats are observed roosting under the bridge, no work under the bridge ~~shall~~ can occur when young of the year are being raised (April through August). ~~(~~This is called the "non-volant period~~.~~".~~)~~ Results of the pre-construction survey and any construction restrictions will be summarized in a letter report and submitted to the City for approval.	City of Goleta, Public Works Department or the contractor is obligated to comply with mitigation measure BIO-8.	This requirement will be included in construction contract documents and specifications. A pre-construction day-time and a night time bat survey ~~prior~~ before~~to~~ bridge demolition. These requirements will be discussed with construction personnel ~~prior to~~before construction to ensure they understand restrictions.	~~PWD~~Planning and Environmental Review Director, or designee

Mitigation Measure	Responsible Party Obligation	Time Frame	Monitoring Party
BIO-9 Bats ~~shall~~ must be excluded from the work area under the bridge ~~prior to~~before April 15 of the construction year. Expandable foam, steel wool, or other method ~~shall~~ must be used to fill the cracks under the bridge that would otherwise provide roosting habitat. Bird exclusion netting ~~shall~~ cannot be used.	City of Goleta, Public Works Department or the contractor is obligated to comply with mitigation measure BIO-9. A biological monitor must inspect the bridge to verify compliance before April 15 of the construction year and provide the Planning and Environmental Review Director, or designee with a memorandum of compliance.	This requirement will be included in construction contract documents and specifications. A biological monitor ~~shall~~ must inspect the bridge to verify compliance prior to April 15 of the construction year and provide the ~~City~~ Planning and Environmental Review Director, or designee, with a memorandum of compliance.	Planning and Environmental Review Director, or designee~~PWD~~

Mitigation Measure	Responsible Party Obligation	Time Frame	Monitoring Party
BIO-10 If a night roost is observed, work under the bridge ~~shall~~ cannot be conducted between evening and sunrise. Bird exclusion netting ~~shall~~ cannot be used. Airspace access to and from the bridge ~~shall~~ must remain. Lighting ~~shall~~ cannot be used at night under the bridge. Combustion equipment such as generators, pumps and vehicles ~~shall~~ cannot be parked or operated under or adjacent to the structure at night. Personnel ~~shall~~ cannot be present under the bridge during the evening or at night.	City of Goleta, Public Works Department or the contractor is obligated to comply with mitigation measure BIO-10.	This requirement will be included in construction contract documents and specifications. The City's construction manager or representative ~~shall~~ must monitor in the field for compliance.	~~PWD~~ Planning and Environmental Review Director, or designee
BIO-11 Critical features of bat roosting habitat (access, ventilation and protection) ~~shall~~ must be incorporated into the design and construction of the new bridge, consistent with the design guidelines provided in Erickson et al 2002. The bridge design ~~shall~~ must include two to four 0.5-inch-wide, 12-inch-deep recessed “slots” between the bridge abutment cap faces to provide bat roosting habitat. The proposed bat roosting slots would be placed underneath the closure pour.	City of Goleta, Public Works Department or the contractor is obligated to comply with mitigation measure BIO-11.	This requirement will be included in construction contract documents and specifications. ~~The City’s construction manager shall review plans and verify.~~	~~PWD~~ Planning and Environmental Review Director, or designee

Mitigation Measure	Responsible Party Obligation	Time Frame	Monitoring Party
Cultural Resources			
CUL-1 ~~In the event that~~Should previously unknown archaeological resources or human remains ~~are~~ be encountered during grading, work ~~shall~~ must be stopped immediately or redirected until the City-approved archaeologist and local Chumash observer can evaluate the significance of the find pursuant to Phase 2 investigation standards set forth in the City Archaeological Guidelines. The Phase 2 ~~shall~~ must be funded by the City. If resources are found to be significant, they ~~shall be~~are subject to a Phase 3 mitigation program consistent with City Archaeological Guidelines. The Phase 3 ~~shall~~ must be funded by the City. ~~City staff shall conduct periodic field inspections to verify compliance during ground disturbing activities and shall ensure preparation of any necessary Phase 2 and/or Phase 3.~~	City of Goleta, Public Works Department or the contractor must prepare the necessary plans which include the required notes and abide by the Mitigation Measure if archaeological resources are encountered. The Planning and Environmental Review Director, or designee, must conduct periodic field inspections to verify compliance during ground disturbing activities and must ensure preparation of any necessary Phase 2 and/or Phase 3.	This requirement ~~shall~~ must be included in construction contract documents and specifications.	~~PWD~~Planning and Environmental Review Director, or designee

Mitigation Measure	Responsible Party Obligation	Time Frame	Monitoring Party
GEO-1 The final grading and erosion control plan ~~shall~~ must be designed to minimize erosion. ~~Plan Requirements:~~ The plan ~~shall~~ must include, ~~but not be~~without limitation~~ed to~~, the following: a) Best Management Practices (BMPs), such as temporary berms and sedimentation traps (such as silt fencing, straw bales, and sand bags), ~~shall~~ must be installed in association with project grading. The BMPs ~~shall~~ must be placed at the base of all cut/fill slopes and soil stockpile areas where potential erosion may occur and ~~shall~~ be maintained to ensure effectiveness. The sedimentation basins and traps ~~shall~~ must be cleaned periodically and the silt ~~shall~~ must be removed and disposed of in a location approved by the ~~City~~Public Works Director, or designee. b) Non-paved areas ~~shall~~ must be revegetated or restored (~~i.e~~e.g.., geotextile binding fabrics) immediately after grading and installation of utilities, to minimize erosion and to reestablish soil structure and fertility. Revegetation ~~shall~~ must include drought-resistant, fast-growing vegetation that would quickly stabilize exposed ground surfaces. Alternative materials rather than reseeding (e.g., gravel) may be used, subject to review and approval by the Planning and Environmental Services Director, or designee, and Public Works Director, or designee. c) Runoff ~~shall~~ cannot be directed across exposed slopes. All surface runoff ~~shall~~ must be conveyed in accordance with the approved drainage plans. d) Energy dissipaters or similar devices ~~shall~~ must be installed at the end of drainpipe outlets to minimize erosion during storm events.	City of Goleta, Public Works Department or the contractor is obligated to comply with mitigation measure GEO-1.	Final grading, drainage, and erosion control plans ~~shall~~ must be reviewed and approved by the ~~City~~ Public Works Director, or designee, and included in construction contract documents and specifications. BMPs and erosion control measures ~~shall~~ must remain in place/~~shall~~ be implemented for the duration of grading and construction. ~~City staff or its contractor~~The Public Works Director, or designee, must ensure ~~shall verify~~ compliance during grading and construction activities.	PWD, or designee~~PWD~~

Mitigation Measure	Responsible Party Obligation	Time Frame	Monitoring Party
GEO-1 (cont.) e. Grading ~~shall~~ must occur during the dry season (~~April 15~~typically May to October~~November 1~~) unless ~~a City-approved~~an erosion control plan approved by the Public Works Director, or designee, is in place and all erosion control measures are in effect. Erosion control measures ~~shall~~ must be identified on an erosion control plan and ~~shall~~ prevent runoff, erosion, siltation, and tracking of mud and soil onto City streets. All exposed graded surfaces ~~shall~~ must be reseeded with ground cover vegetation to minimize erosion. Graded surfaces ~~shall~~ must be reseeded within four weeks of grading completion, with the exception of surfaces graded for the placement of structures. These surfaces ~~shall~~ must be reseeded if construction of structures does not commence within four weeks of grading completion. f. Site grading ~~shall~~ must be ~~completed such that~~accomplished to ensure water ~~permanent~~ drainage is angled away from foundations and slabs ~~is provided~~ and so that water ~~shall~~ does not pond near proposed structures or pavements.	(see above)	(see above)	(see above)

Mitigation Measure	Responsible Party Obligation	Time Frame	Monitoring Party
Greenhouse Gas Emissions			
GHG-1 Energy conservation measures ~~shall~~ must be included in any future structures. The following optional energy-conserving techniques could be incorporated if City engineering staff determine they are feasible and practicable: • ~~Use of~~Using water-based paint on exterior surfaces • ~~Installation of~~Installing cool pavements if they meet the construction criteria • ~~Provision of~~Providing segregated waste bins for construction-related recyclable materials • Zero waste/high recycling standards for construction debris	City of Goleta, Public Works Department or the contractor is obligated to comply with mitigation measure GHG-1.	These requirements ~~shall~~ must be included in construction contract documents and specifications. ~~City staff shall~~The Public Works Director, or designee, must verify compliance during periodic inspections of the work site during construction and during final inspection of the structure.	PWD, or designee~~PWD~~

Mitigation Measure	Responsible Party Obligation	Time Frame	Monitoring Party
Hazards and Hazardous Materials			
HAZ-1 ~~Prior to~~Before demolition work that could disturb identified Asbestos-Containing Materials (ACM), an ACM Abatement and Management Plan ~~should~~ must be prepared. Asbestos abatement ~~shall~~ must be conducted during demolition activities, consistent with Federal OSHA and air quality regulations. The Plan will include: • Detailed information regarding ACM classification; • ACM hazard assessment (the possibility of fiber release from ACM is based on the materials condition, such as friability); • ACM inventory information, training and qualification for workers; • Demolition handling procedures, waste management and disposal procedures, and emergency response procedures (in case of a release of friable materials). A licensed asbestos abatement removal contractor ~~shall~~ must remove the identified ACM~~s~~ under the oversight of a California Certified Asbestos Consultant. The ACM removal should include notification of demolition activities to the Santa Barbara Air Pollution Control District.	City of Goleta, Public Works Department or the contractor is obligated to comply with mitigation measure HAZ-1. An ACM Asbestos ~~abatment~~ Abatement and Management plan ~~shall~~ must be developed and implemented.	~~Prior to~~Before demolition work, an ACM Abatement and Management Plan ~~shall~~ must be prepared. This requirement ~~shall~~ must be included in the construction contract documents and specifications. ~~City staff shall~~The Public Works Director or designee must review and approve the Plan ~~prior to~~before demolition.	~~PWD~~ PWD, or designee~~SBAPCD~~ SBCAPCD

Mitigation Measure	Responsible Party Obligation	Time Frame	Monitoring Party
HAZ-2 Lead~~-~~-Based Paint (LBP) should be removed ~~prior to~~before demolition work that could disturb identified LBP. If the LBP remains in good condition and is not disturbed, exposures to lead are expected to be negligible. However, when LBP deteriorates, is disturbed or damaged such as during demolition or renovation operations, lead dust may be released, creating potential health hazards. The following is recommended: • The LBP that is in good condition does not need to be abated ~~prior to~~ before renovation/demolition. However, any flaking or peeling LBP should be removed by a licensed lead abatement contractor and disposed of following federal, state, and local regulations. LBP may be disposed of as construction debris as long as it remains on the substrate. • The renovation/demolition contractor should implement precautions to comply with OSHA regulation 29 CFR § 1926.62, Lead in Construction. • All painted building materials should be disposed of as construction debris and the renovation/demolition contractor should not be allowed to recycle the painted material in accordance with federal, state, and local regulations for the proper disposal of LBP. ~~The renovation/demolition contractor should implement precautions to comply with OSHA 29 CFR 1926.62, Lead in Construction.~~	City of Goleta, Public Works Department or the contractor is obligated to comply with mitigation measure HAZ-2. The construction contractor must provide the Public Works Director, or designee, with a report documenting handling, removal, and disposal of LBP. ~~The construction contractor shall provide the City with a report documenting handling/removal/disposal of LBP.~~	~~City staff shall~~The Public Works Director, or designee, must verify these requirements are included in construction contract documents and specifications. ~~Lead Based Paint (~~LBP~~)~~ should be removed ~~prior~~ before ~~to~~ demolition work that could disturb identified LBP.	PWD, or designee~~PWD~~

Mitigation Measure	Responsible Party Obligation	Time Frame	Monitoring Party
HAZ-2 (cont.) In addition to the above-mentioned recommendations, the following precautions should be taken ~~prior to~~before any repair or maintenance activities that would disturb LBP: • Do not cut, sand, or drill materials containing LBP. • ~~Prior to~~Before initiating renovation/demolition activities that would disturb the LBP, wet the area to prevent possible release into the air. • Remove dust with a high efficiency particulate air (HEPA) vacuum or wet wipe with disposable towels. • Follow federal, state, and local regulations for proper disposal of LBP. ~~Plan Requirements and Timing: City staff shall verify these requirements are included in construction contract documents and specifications.~~	(see above)	(see above)	(see above)

Mitigation Measure	Responsible Party Obligation	Time Frame	Monitoring Party
HAZ-3 Based on the historical impacted soil in the area of the property, there is the potential of encountering impacted soil in the vicinity of the property during demolition and construction of the bridge. A Soil Management Plan (SMP) ~~will~~ must be prepared and implemented for project construction activities. The SMP will provide guidance for the proper handling, on-site management, and disposal of impacted soil and groundwater that may be encountered during proposed earthwork activities (e.g., excavation and grading). The SMP will outline ~~guidelines~~ requirements for the following: • Contaminated soil and groundwater identification • Contaminated soil and groundwater assessment • Construction and maintenance of contaminated soil storage areas • Dust control • Soil/groundwater waste segregation criteria • Waste management procedures	City of Goleta, Public Works Department or the contractor is obligated to comply with mitigation measure HAZ-3. The construction contractor ~~shall~~ must notify the City's construction manager or representative within 24 hours if impacted soil and/or groundwater are encountered. After removal as per the SMP, the contractor will provide the ~~City~~ Public Works Director, or designee, with a memorandum for its files documenting the discovery, sampling and disposal of any contaminated soils.	This requirement ~~shall~~ must be included in construction contract documents and specifications. The SMP ~~shall~~ must be submitted to the ~~City staff~~Public Works Director, or designee, for review and approval prior to ground disturbance.	PWD, or designee~~PWD~~

Mitigation Measure	Responsible Party Obligation	Time Frame	Monitoring Party
HAZ-3 (cont.) The SMP will include practices that are consistent with Cal-OSHA regulations, as well as the Santa Barbara County Public Health Department, Environmental Health Services Unit (Certified Unified Program Agency – CUPA) land use-specific remediation standards. A hazardous materials consultant or trained professional such as a Professional Geologist or Professional Engineer, with suitable and applicable experience, will be available during earthwork activities to monitor soil and groundwater conditions encountered, in order to evaluate the absence or presence of hazardous substances associated with previous land uses. If impacted soil and/or groundwater are encountered, samples will be collected to identify the extent of contamination. In the event that contaminated soil and/or groundwater are encountered during construction, the suspect excavated soil will be stockpiled and covered on site. As required, the CUPA will be notified to evaluate whether further assessment is warranted and specify procedures for handling and disposing of contaminated soil. Contaminated soil will be removed by a licensed waste hauler to a landfill permitted to receive this type of waste.	(see above)	(see above)	(see above)

Mitigation Measure	Responsible Party Obligation	Time Frame	Monitoring Party
Noise			
NO-1 The contractor ~~shall~~ must provide temporary portable barriers or acoustical curtain systems between the construction activity and sensitive receptors during construction activities. Plans to provide such noise mitigation elements will be coordinated with the ~~City~~ Public Works Director, or designee, and the property owners or tenants to ensure that such mitigation elements do not result in negative impacts to business operation (including business access or ability of potential customers to see the business. ~~City staff shall spot check to verify compliance and/or respond to complaints.~~	City of Goleta, Public Works Department or the contractor is obligated to comply with mitigation measure NO-1. ~~City staff shall~~The Public Works Director, or designee, must spot check to verify compliance and/or respond to complaints.	These requirements ~~shall~~ must be included in construction contract documents and specifications.	PWD, or designee
NO-2 In addition to any temporary noise barrier system, the contractor must adhere to the following Caltrans Standard Specifications for general noise reduction strategies ~~shall be followed~~: • Use modern construction equipment • All powered construction equipment should have adequate mufflers and be well maintained • Plan noisiest operations for times of least intrusion • Use quieter alternate methods or equipment when possible • Locate stationary noise sources away from sensitive receiver locations • Operate equipment at minimum power as feasible ~~City staff shall periodically inspect the site to ensure compliance.~~	City of Goleta, Public Works Department or the contractor is obligated to comply with mitigation measure NO-2. ~~City staff shall~~The Public Works Director, or designee, must periodically inspect the site to ensure compliance.	These requirements ~~shall~~ must be included in construction contract documents and specifications.	PWD, or designee

Mitigation Measure	Responsible Party Obligation	Time Frame	Monitoring Party
Transportation/Traffic			
T-1 Implement Temporary Traffic Control Modifications: • Provide traffic controls when lanes are closed due to construction, e.g., flaggers, detour signs, orange safety cones • Provide detours for emergency vehicles • Notify the residents or owners of any properties within 1,000 feet and/or adjacent to the project route of the construction schedule at least one week before construction in their vicinity • Provide access to the affected properties during construction • Provide alternative routes for bicycles and pedestrians as feasible ~~The temporary traffic control measures shall be noted on construction documents and specifications. All temporary traffic control measures shall be made prior to road closure.~~ ~~The City's contractor and construction manager shall ensure that the modifications are in place before road closure.~~	City of Goleta, Public Works Department or the contractor is obligated to comply with mitigation measure T-1. The construction contractor must prepare a Temporary Traffic Control Plan for the City's review and approval.	The temporary traffic control measures must be included in construction contract documents and specifications. ~~Prior to~~Before construction, the construction contractor ~~shall~~ must prepare a Temporary Traffic Control Plan for the City's review and approval. Before road closure, all temporary traffic control measures must be made. Before road closure, the City's contractor and construction manager must ensure that the modifications are in place.	~~PWD~~City's contractor and construction manager

Mitigation Measure	Responsible Party Obligation	Time Frame	Monitoring Party
Utilities and Service Systems			
U-1 A Waste Reduction and Recycling Plan (WRRP) ~~shall~~ must be prepared ~~by the Public Works Department for review and approval~~and approved by the Public Works Director, or designee. The plan ~~shall~~ must indicate how a 50-percent diversion goal ~~shall~~ will be met during construction including, ~~but not limited to~~without limitation, the following: a) Demolition and/or excess construction materials ~~shall~~ must be separated on-site for reuse/recycling or proper disposal (e.g., concrete asphalt). b) During grading and construction, separate bins or areas for recycling of construction materials ~~shall~~ must be provided on-site whenever possible. c) All demolition materials ~~shall~~ may become the property of the Contractor in accordance with Section 7-1.13 “Disposal of Material Outside of the Highway Right of Way” of the Caltrans Standard Specifications. Recoverable construction material ~~shall include~~includes, without limitation, ~~but not be limited to~~ asphalt, lumber, concrete, glass, metals, and drywall.	City of Goleta, Public Works Department or the contractor is obligated to comply with mitigation measure U-1.	This requirement ~~shall~~ must be included in construction contract documents and specifications. ~~At the end of the project,~~Before the City files a Notice of Completion, the construction contractor ~~shall~~ must submit a Post-Construction Waste Reduction and Recycling Summary Report to the Public Works Director, or designee, documenting the types and amounts of materials that were generated during the project and how much was reused, recycled, composted, salvaged, or landfilled.	PWD, or designee

Mitigation Measure	Responsible Party Obligation	Time Frame	Monitoring Party
U-2 Demolition and/or excess construction materials ~~shall~~ must be separated on-site for reuse/recycling or proper disposal (e.g., concrete asphalt). During grading and construction, separate bins for recycling of construction materials and plant material (e.g., brush) ~~shall~~ must be provided on-site. ~~City staff shall ensure construction and specifications include these measures, including provision for construction management reports to verify compliance. The contractor shall submit a post-construction waste reduction and recycling summary to the Community Services Department. Materials shall be recycled as necessary throughout construction.~~	City of Goleta, Public Works Department or the contractor is obligated to comply with mitigation measure U-2. The Public Works Director, or designee, must ensure construction and specifications include these measures, including provision for construction management report to verify compliance. The contractor must submit a post-construction waste reduction and recycling summary to the Public Works Director, or designee.	This requirement ~~shall~~ must be included in construction contract documents and specifications. ~~and requirements for recycling should be implemented during construction.~~Materials will be recycled as necessary throughout construction.	PWD, or designee