Opportune

Venoco, Inc.

Amortization Study for Ellwood Onshore Facility

April 8, 2016

TABLE OF CONTENTS

SECTION	TITLE	PAGE
I.	INTRODUCTION	1
II.	METHODOLOGY FOR DETERMINING REASONABLE AMORTIZATION PERIOD	3
III.	USEFUL LIFE IN EXTRACTIVE INDUSTRIES	4
IV.	ASSET AND FUNCTIONAL DESCRIPTIONS	7
V.	HISTORICAL AND CURRENT ASSET CONDITIONS	12
VI.	CAPITAL INVESTMENT IN PLATFORM HOLLY AND THE EOF	14
VII.	FEASIBILITY OF RELOCATING THE EOF	16
VIII.	REMAINING LIFE OF THE SOUTH ELLWOOD FIELD	22
IX.	REASONABLE AMORTIZATION PERIOD	23

APPENDICES

Appendix A – Terms and Conditions

Appendix B – Sources of Information

Appendix C – Photographs from Site Inspection

Appendix D – EOF Equipment List

Appendix E – InterAct Relocation Report

Appendix F – InterAct Removal Report

Appendix G – Reserve Appraisal Reports

I. INTRODUCTION

Venoco, Inc. ("Venoco") produces oil and gas from the South Ellwood Field on Platform Holly. As shown in Figure 1, Platform Holly is located off the coast of Goleta, California in state waters. The Ellwood Onshore Facility ("EOF") processes Platform Holly oil, water and gas production, and provides for the sale of the platform's oil and gas to market. The EOF receives an oil and water emulsion from Platform Holly and separates it into dry oil and produced water. The dry oil is sold to refineries and the produced water is injected into an onsite disposal well. The EOF also receives produced gas from Platform Holly and conditions it by removing hydrogen sulfide, carbon dioxide and natural gas liquids. The conditioned gas and gas liquids are then sold to end-users.

As currently configured, Platform Holly and the EOF have a functionally interdependent relationship and neither could function independently. Platform Holly relies on the EOF to process its oil and gas production and transfer it to market for sale, supply natural gas to safely operate its flare pilot and power generation, and dispose its produced water. The EOF relies on Platform Holly's oil and gas production to remain operational.

The EOF is a significant processing facility. It occupies an area of approximately 4.5 acres (the "EOF Site"). Processing equipment at the site includes fired heaters, pressure vessels, heat exchangers, compressors, pumps, instrumentation, and thousands of feet of interconnecting pipe. The site also has utilities systems, electrical gear, storage tanks, custody transfer units, and a building that includes the facility control room, laboratory, and offices.

Figure 1: Selected Oil and Gas Facilities and Infrastructure

The EOF is located in what was previously an unincorporated area of Santa Barbara County (the "County"). Although the EOF was constructed and permitted in the 1970s and predates most of the surrounding uses, in 1990, the County re-zoned the EOF Site from an industrial use to recreation, so that the EOF became a legal nonconforming use. As a result, the facility could continue to operate, and has continued to operate, to the present.

In 2002, the City of Goleta (the "City") incorporated and, as a result, the EOF Site is now within the jurisdictional limits of the City. Pursuant to Section 35-160 of the City's Coastal Zoning Ordinance, the use of a nonconforming facility generally can continue, but cannot be enlarged, expanded, or extended beyond normal repair and maintenance, except that (1) a nonconforming use may be extended throughout an existing building and (2) certain improvements that result in minor enlargement, extension, expansion or structural alterations of an industrial building are allowed, subject to the Planning Commission's grant of a Limited Exception Determination.

In January 2015, the Goleta City Council adopted Ordinance 15-1 which made it easier and less onerous than prior zoning provisions for the City to terminate the legal nonconforming use of the EOF following the expiration of an amortization period, the maximum duration of which is 20 years (the "Amortization Ordinance").

The purpose of this amortization study (the "Study") is to determine a reasonable amortization period with respect to the EOF and whether the maximum 20-year amortization period allowed under the Amortization Ordinance would be sufficient for Venoco to recoup its investment. This determination is based in part on whether it is feasible to relocate the EOF.

In connection with our analysis, we undertook the following investigations:

- Site inspection of the EOF to observe the facility, confirm the existence and nature of its physical assets, and observe the physical condition of the equipment. We met with operations personnel to discuss the history of the facility, current and future operations, performance of the facility, and maintenance procedures. Photographs from the site inspection are included as Appendix C to this Study;

- Review of equipment lists representing the physical assets comprising Platform Holly and the EOF. The equipment list for the EOF is included as Appendix D to this Study;

- Review of plot plans for the EOF;

- Review of process flow diagrams and piping and instrumentation diagrams to develop an understanding of the industrial processes performed at Platform Holly and the EOF;

- Review of Platform Holly and EOF financial data, throughput volumes, fixed and variable costs, and maintenance costs;

- Review of a report titled *Venoco Ellwood Onshore Facility (EOF) Relocation Alternatives and Costs* (March 2015) prepared by InterAct (the "InterAct Relocation Report"), which is included as Appendix E to this Study and is discussed in some detail below, to develop an understanding of alternatives under which Platform Holly production could potentially continue in the absence of the EOF;

- Review of a report titled Venoco Ellwood Onshore Facility (EOF) Aboveground Facilities Removal Costs Estimates (March 2105) prepared by InterAct (the "InterAct Removal Report"), which is included as Appendix F to this Study and provides an estimate of the cost to decommission and abandon all of the above-ground facilities at the EOF, except for equipment needed to maintain continued operation of Platform Holly;

- Evaluation of capital expenditure history with respect to Platform Holly and the EOF, including sustaining capital;

- Review of studies relating to the amount of oil and gas that can be recovered from the South Ellwood Field, including reserve appraisal reports, excerpts from which are presented as Appendix G to this Study; and

- Review and analysis of other pertinent public information, as well as audited and un-audited financial information and other material information provided by Venoco.

Based on the analysis detailed in the paragraphs below, Opportune concludes that, the reasonable amortization period for the EOF is a minimum of 38 years, based on Venoco's capital investments in Platform Holly and the EOF, the remaining life of the oil and gas reserves present in Venoco's existing State leases in the South Ellwood Field and the infeasiblity of relocating the EOF (as determined by Venoco).

II. METHODOLOGY FOR DETERMINING REASONABLE AMORTIZATION PERIOD

It has been established in California that, if a city wants to eliminate a legal nonconforming use, it may pursue one or two constitutionally equivalent alternatives. It can either eliminate the use immediately by payment of just compensation, or it can require removal of the use without compensation following a reasonable amortization period. Here, the Goleta City Council adopted the Amortization Ordinance, which provides a mechanism for the City Council to terminate a legal nonconforming use on an ad hoc basis following an amortization period established by the City Council.

The longest amortization period permitted under the Amortization Ordinance is 20 years,

regardless of the use or related improvements. It is noted that municipalities rarely require the termination of major land uses and, in the infrequent circumstance where they do, more commonly provide amortization periods ranging from 20-60 years with respect to the termination of nonconforming commercial and industrial uses, depending on the nature and extent of the improvements. Shorter amortization periods are generally reserved for modest uses and improvements, such as signs.

A city's amortization scheme must be reasonable in character, commensurate with the investment involved, and each case must be determined on its own facts. California courts have identified a number of factors that may be considered in determining whether an amortization period is unreasonable in its application to a particular property, although not all factors apply with respect to the termination of a particular nonconforming use. The factor most often considered and applied is the remaining useful life of the improvements that comprise the nonconforming use. In one case, for example, a court held that an amortization ordinance that required termination of commercial uses in a residential zone within five years was unlawful as applied to a wood-framed planning mill that had a remaining useful life of 21 years at the time the ordinance was adopted.[1] Other relevant factors with regard to the closure of a significant industrial facility include the capital investment in the property and the expense and practicality of relocating the facilities. The application of the remaining useful life of a facility to determine a reasonable amortization period is particularly appropriate where the facility includes substantial improvements and the capital investment by the owner of the facility is significant.

As previously discussed, Platform Holly and the EOF function as an integrated complex of industrial facilities, so that, if the EOF discontinues operation, the extraction of oil and gas from Venoco's State leases in the South Ellwood Field from Platform Holly would also terminate unless it is feasible to relocate the EOF. Therefore, the analysis below will focus on the remaining life of the oil and gas reserves contained in the South Ellwood Field, the remaining useful life of both Platform Holly and the EOF, Venoco's significant and continuing capital investment in Platform Holly and the EOF to produce the oil and gas present in the South Ellwood Field, and the feasibility of relocating the EOF.

III. USEFUL LIFE IN EXTRACTIVE INDUSTRIES

In the case of extractive industries, such as the oil and gas industry, it is important to recognize that investments are made solely for the purpose of recovering the underlying natural resources from private or government leases. Value is created by recovering and selling the natural resources in an active market for commodities such as oil and natural gas. Investments in production infrastructure are necessary to extract and process the resources and ready them for transportation to end-users. As long as it is economically feasible to produce the reserves, production infrastructure is necessary in order to extract and process the underlying oil and gas reserves in the producing field.

---

[1] *City of La Mesa v. Tweed & Gambrell Mill*, 146 Cal. App. 2d 762, 770 (1956).

Characteristics of Extractive Industries

Extractive industries are focused on recovering natural resources. Investments are made for the purpose of finding, proving, producing, and processing natural resources. In the publication titled *The Extractive Industries Sector, Essentials for Economists, Public Finance Professionals, and Policy Makers (2015)*, the World Bank Group offers an overview of extractive industries:

> "Investment in the extractive sector differs fundamentally, and in various respects, from investment in most other sectors. First, initial investments in infrastructure and mine/oilfield development can be very large; capital costs often run into the billions of dollars. Second, extractive industries (EI) investments are characterized by long lead times, since mines and oilfields can take a decade or more to discover and then develop. Once the expenditure is made, these investments are essentially sunk costs and must be completed before the mine or oil/gas field is brought into production. On the other hand, investment horizons can also be very long, with some mines producing for 50–100 years or more. Third, investments are subject to a high level of uncertainty, particularly at the exploration, design, and development stages, but risk remains high during operation due to oil and mineral price volatility, and uncertainty about the extent of reserves. At low prices, low ore grades are unprofitable to mine and are considered as waste. Similarly, oil and gas extraction that requires expensive technology is only profitable as long as the price remains high enough to cover the requisite expense. Fourth, oil and minerals are finite resources, and since production of an additional unit today means that this unit will not be available in the future, optimal depletion strategies are affected and differ depending on private and social time preferences. Finally, in the mining sector the costs of closing a mine can constitute a significant share of a project's overall budget."

The Oil & Gas Investment Cycle

The investment cycle for extractive industries reflects both the long lead times needed to develop oil and gas fields as well as the uncertainty faced at different points in the cycle. Here, we focus on the investment cycle for oil and gas production. World Bank Group provides the following overview of the oil and gas investment cycle:

> **Exploration Surveys and Drilling.** Geological maps are reviewed in desk studies with the objective of identifying major sedimentary basins. Once a promising geological structure has been identified, the only way to confirm the presence of hydrocarbons is by drilling exploration wells, either from a pad constructed for the purpose (on land) or from an offshore drilling unit (at sea). Where a hydrocarbon formation is found, initial well tests (which may take another month) are undertaken. Unlike minerals, exploration for hydrocarbons (including coal bed methane) requires pilot-level (test) production to confirm feasibility. This is because reservoir

porosity and interwell connectivity (during production) are equally important determinants of potential, as are resource size and quality.

Appraisal. When exploratory drilling is successful, more wells are drilled to establish the size and extent of the field, using the same techniques as for exploratory drilling.

Development and Production. Once the size of the oilfield is established, production wells are drilled. Large reservoirs require various wells to be drilled. Advances in directional drilling have increased the number of wells that can be drilled from one location to as many as 40 or more. After reaching the surface, the hydrocarbon is routed to a central production facility, which gathers the produced fluids (oil, gas, and water) before they are transported onward for further processing.

Decommissioning and Rehabilitation. The decommissioning process should be considered at the initial planning stage of the operation. The site should be restored to environmentally sound conditions. The local environmental footprint of oil extraction for land-based production is essentially just a concrete production pad and adjacent infrastructure, wells that need to be plugged, and pipeline infrastructure. The cost of decommissioning is a function of the complexity of the infrastructure.

The development and production phase described above is typically the longest of the investment phases. Typically, oil and gas fields will produce for many years before fully depleting the recoverable reserves from the developed field. By this time in the investment cycle, the infrastructure needed to process oil and gas from the field is in place, and the infrastructure that is constructed, and its associated cost, is commensurate with the useful life of the portion of the field from which production is permitted. Additional wells may be drilled to expand production to new areas within a field and existing wells may be reworked to maintain production rates over time and improvements to infrastructure may be required as conditions change.

The time horizon to produce oil and gas reserves is typically over a long period of time and often requires a significant investment associated production infrastructure. It is important to match the useful life of the infrastructure to the remaining life of the reserves to avoid excess capital costs and/or infrastructure being underutilized. Operators can accomplish this matching through appropriate investments in replacements and renewals to sustain safe operation of production infrastructure until it is no longer economically viable to produce the remaining oil and gas reserves.

In this way, the useful life of production infrastructure is directly tied to the life of the reserves being produced. Production infrastructure will continue to be used to process oil and gas from a field as long as it is economically viable to produce the reserves.

IV. ASSET AND FUNCTIONAL DESCRIPTIONS

The information in this section is based in part on the InterAct Relocation Report, as well as discussions with Venoco. Figure 1 shows the relative location of the facilities and pipelines discussed below. Venoco produces oil and gas from the South Ellwood Field on Platform Holly. Platform Holly is located off the coast of Goleta, California in state waters. The EOF supports the processing of Platform Holly oil, water, and gas production, and provides for the sale of the platform's oil and gas to market. The gas is sold to Southern California Gas ("SCG") via a sales gas line located at the EOF. The oil is shipped through dry oil sales pipeline ("Line 96") that carries the oil from a tie-in point at the EOF Site through an approximately 9-mile onshore pipeline to a pipeline owned by the Plains All American Pipeline Limited Partnership (the "Plains Pipeline") with a tie-in point near the LFC Facility (the LFC Facility is described in a following section). The EOF also provides natural gas to Platform Holly.

Platform Holly

Platform Holly is a self-contained oil drilling and offshore production platform located in the Santa Barbara channel. As shown in Figure 2 below, it is located approximately 2.4 miles offshore from the City, and sits in 211 feet of water. The primary operations on the platform are oil and gas production, well maintenance and workover operations, separation of produced oil and gas, emulsion shipping, vapor recovery, gas compression and dehydration, and gas lift compression. The facility produces from the Rincon and Monterey formations under State oil and gas leases PRC 3120 and PRC 3242 (the "State Leases"), which cover part of the South Ellwood Oil Field. There are currently 30 well slots, which include 14 oil production wells, two gas injection and production wells, three produced water injection wells, two wells for injection of drill cuttings, eight shut-in production wells and one temporarily abandoned well.

In early 2015, Platform Holly was producing approximately 3,600 barrels of oil and natural gas liquids per day, 19,000 barrels of water per day ("bw/d"), and 2,500 thousand cubic feet per day ("mcf/d") of gas. Platform Holly emulsion is sent through a 6" offshore emulsion line to the EOF for processing. When producing, Platform Holly gas is sent through a 6" offshore gas line to the EOF for processing. Gas is sent from the EOF to Platform Holly via a 4" utility line for the required safe operation of the platform flare pilot and offshore rig generators.

Figure 2: Locations of Platform Holly and the EOF

Figure 3: Ellwood Onshore Facility

Ellwood Onshore Facility

The EOF receives and processes oil-water emulsion and gas production from Platform Holly. The EOF is located between Santa Barbara's Sandpiper Golf Course (developed in 1972) and the Bacara Resort (built in 2000). The aerial photograph in Figure 3 shows the layout of, and the improvements and equipment that comprise, the EOF. Most recently, the EOF was processing approximately 2,500 mcf/d of natural gas (approximately 1,200 mcf/d which is sold as gas and approximately 200 b/d which is sold as gas liquids), 3,400 barrels of oil per day ("bo/d"), and up to 2,500 bw/d. When in operation, the emulsion and gas are processed at the EOF before being transferred to the oil and gas sales lines. The gas is sold to SCG through a sales line at the EOF Site. The oil goes through a Lease Automatic Custody Transfer ("LACT") unit at the EOF Site before shipment through Venoco's Line 96 to the Plains Pipeline. The oil is heated prior to being shipped through the LACT to bring it to the Plains Pipeline temperature spec of at least 130 degrees Fahrenheit. The waste water from the EOF is injected into the EOF onshore water injection well.

The EOF is a significant processing facility, as shown in Figure 3. The EOF Site is approximately 4.5 acres in size. Processing equipment at the site includes fired heaters, pressure vessels, heat exchangers, compressors, pumps, instrumentation, and thousands of feet of interconnecting pipe. The site also has utilities systems, electrical gear, storage tanks, custody transfer units, and a building that includes the facility control room, laboratory, and offices. Appendix C sets forth an equipment list with process descriptions for the EOF that was compiled from piping and instrument diagrams of the facility.

Functional Interdependence between Platform Holly and the EOF

Platform Holly and the EOF have a functionally interdependent relationship and neither could function independently. Platform Holly relies on the EOF to process its oil and gas production and transfer it to market for sale, supply natural gas to safely operate its flare pilot and power generation, and dispose its waste water. The EOF relies on Platform Holly's oil and gas production to remain operational.

A block flow diagram of Platform Holly and the EOF is shown in Figure 4 below to graphically illustrate this interdependence. Production from the South Ellwood Field, in the form of a mixture of oil, water, and natural gas, is received by Platform Holly. Here the mixture is first separated into two streams. One is a liquid stream comprised of a mixture of oil and water, referred to as emulsion. The second is a gas stream comprised of sour natural gas saturated with water. As separated at Platform Holly, neither of these streams is suitable for sale and must be processed further. Each of the oil emulsion and sour gas streams is transported to the EOF via submerged 6" pipelines.

At the EOF, the oil emulsion and sour gas streams are each processed to make salable products. The oil emulsion is processed to remove the produced water and to provide a dry oil stream that can be shipped by pipeline and sold to refineries. The sour gas stream

is processed to remove hydrogen sulfide and natural gas liquids (NGL) and then dried to meet the specifications of sales quality natural gas. The sales gas is transported to customers by pipeline. Removal of the hydrogen sulfide produces a small amount of sulfur that is transported from the EOF Site by truck. Similarly, recovered NGL is transported from the site by truck. Produced water is disposed of in an onshore injection well.

The EOF also provides electricity and gas to Platform Holly. Offshore electrical power is provided from the Southern California Edison ("SCE") substation that is co-located at the EOF Site. There is a power cable that extends from the SCE substation to the platform. Natural gas, which is needed for platform operations, including to provide the pilot for the platform's flare, is supplied by a 4" utility gas pipeline.

Figure 4: Block Flow Diagram of Platform Holly and EOF

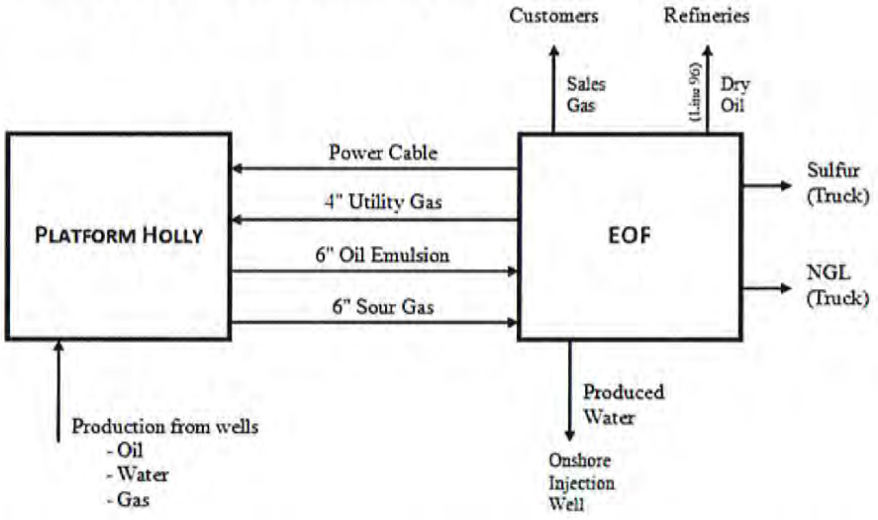

Pipeline Infrastructure

As outlined above, there are three pipelines between Platform Holly and the EOF: (a) a 6" emulsion line that carries wet oil with produced water, (b) a 6" gas pipeline that carries produced sour gas, and (c) a 4" utility line to provide sales quality gas from the EOF to the platform for operations. "Pigging" refers to the practice of a transporting device known as "pigs" through a pipeline for the purpose of internal cleaning. Another device, known as a "smart pig", is similarly transported through a pipeline to determine the condition of the pipe. The 6" lines are pigged regularly and inspected using smart pigs annually with equipment at Platform Holly and at the EOF. Similarly, the 4" line is pigged and hydrostatically pressure tested annually. All three pipelines are also externally inspected annually via remote operated vehicle ("ROV"). Line 96 was installed in 2012 to transport dry oil from the LACT at the EOF to the Plains Pipeline tie-in point. This line is pigged regularly and smart pigged at longer intervals using equipment located near the EOF and at the Plains Pipeline tie-in point. Equipment for leak detection is also located at the EOF, along the pipeline, and at the Plains Pipeline tie-in point.

Las Flores Canyon Facility

ExxonMobil owns and operates onshore facilities in Las Flores Canyon for the processing of oil and gas (the "LFC Facility"). The LFC Facility has been designated by the County as the consolidated processing site for future oil and gas development on the south coast of the County. The LFC Facility is located approximately 8 miles northwest of the City of Goleta on the north side of the U.S. Highway 101 shown on Figure 1. The LFC Facility currently receives oil and gas from Platforms Hondo, Harmony, and Heritage. Produced natural gas is split into two streams. Gas sent to the POPCO gas plant is sold. Gas sent to the Sour Gas Treating Plant is used to generate electricity and steam for the operation of the LFC Facility. The processed crude oil is sold and pumped into the Plains Pipeline. As explained below, the LFC Facility was considered as a potential option to process Platform Holly emulsion and natural gas; however this option was infeasible due to high relocation costs and permitting issues.

V. HISTORICAL AND CURRENT ASSET CONDITIONS

Platform Holly

Platform Holly was originally built in 1966 and has produced oil and gas from the Rincon and Monterey zone formations in the South Ellwood Oil Field since that time. The first wells drilled in the Rincon zone were low sulfur. Soon afterward, oil was discovered in the Monterey zone, but before production of the Monterey zone could occur, upgrades to the platform were required to safely handle and process the high sulfur oil. Venoco acquired Platform Holly, as well as the EOF, from Mobil in 1997. Since that time, Venoco has undertaken two improvement programs to enhance the performance of Platform Holly. The first program was performed in 1997 and included upgrades to the gas flaring system and air quality equipment to satisfy an abatement order issued by the Santa Barbara Air Pollution Control District.

In 2005, Venoco began its second major improvement program designed to increase the production under its existing State Leases. The improvements included major structural additions that increased the platform's strength and load bearing capacity, new living quarters, new well drilling equipment, new power generation equipment, and the re-drilling of six wells. These improvements nearly doubled the production rate of Platform Holly from 2,000 bo/d before the improvements to a current production rate of 3,600 barrels of oil and natural gas liquids per day.

As discussed in a previous section, owners in an extractive industry, such as the oil and gas industry, base capital expenditures for production assets on the need to produce economically recoverable reserves. Since Venoco acquired Platform Holly in 1997, it has maintained, modified, and enhanced the platform to support changing oil and gas production needs. Venoco has not been subject to any restrictions regarding the type of investment that may be made in Platform Holly and therefore has closely matched the capability of the platform to future production needs. Moreover, we expect that Platform Holly will continue to be maintained in an operable condition as long as reserves from

the South Ellwood Field can be economically produced. For these reasons, the remaining useful life of Platform Holly is equivalent to the life of the economically recoverable reserves in the South Ellwood Field, as discussed in more detail later in this Study.

Ellwood Onshore Facility

The EOF was also originally built in 1966 and has supported the production of oil and gas from Platform Holly since that time. The facility was originally designed to process sweet crude oil and natural gas, but has been modified over the years to process sour crude oil and gas by removing hydrogen sulfide and carbon dioxide. The current permit limit is 20,000 b/d of emulsion and 13,000 bo/d of dry oil.

As explained previously, in 1990 the County rezoned the EOF Site from industrial use to recreation, so that the EOF became a legal non-conforming use. As a result, the facility can continue to operate and has continued to operate to present. In 2002, the City of Goleta incorporated and, as a result, the EOF Site is now within the City's jurisdictional limits. Pursuant to Section 35-160 of the City's Coastal Zoning Ordinance, the use of a non-conforming facility generally cannot be enlarged, expanded, or extended beyond normal repair and maintenance, except that (1) a non-conforming use may be extended throughout an existing building and (2) certain improvements that result in minor enlargement, extension, expansion, or structural alterations of an industrial building are allowed, subject to the Planning Commission's grant of a Limited Exception.

On August 11, 2015, a team from Opportune comprised of Phil Steed, Will Carroll, and Paul Legoudes visited the EOF Site. The purposes of the site visit were to (1) inspect the facility and assess its condition and (2) determine if it could continue to be maintained to support future production from Platform Holly. The Opportune team met with Venoco operations personnel. The site visit began with an initial meeting to discuss the history of the facility, current and future operations, any operating problems, and site maintenance procedures. Then, the Opportune team inspected the entire EOF facility. The site visit concluded with a follow-up meeting after the tour with additional questions and answers.

The facility inspection involved walking through the site from south to north, roughly following the process flow through the facility, and visually observing the condition of equipment items. The EOF was not in operation at the time of the tour. Major equipment observed during the tour included combustion burners, heater treaters, crude heat exchangers, various storage tanks, compressors, a stabilizer, a LoCat unit, and membrane units. The team also observed various utility systems that support the plant and Platform Holly, including the SCE substation that supplies Platform Holly, the oil sales line tie-in to Line 96, and firewater systems. Based on our observations, equipment items appeared well maintained and there was no indication of difficulty maintaining the equipment for safe operation of the facility.

In addition to the site tour, we discussed the post-1990 zoning restrictions with Venoco officials. Specifically, we wanted to determine whether the restrictions had a negative impact on the ability to maintain the EOF. Based on those discussions and our inspection

of the EOF, it is our conclusion that the post-1990 restrictions have had no material impact on the facility or the capability to maintain it during the remaining useful life of Platform Holly. Based on financial records that we have reviewed, Venoco has invested $9 million in capex in the EOF since 2005 to keep the facility operating reliably and safely. The EOF has not experienced an unplanned shutdown of operations due to equipment reliability since Venoco acquired it in 1997, further demonstrating its good condition and proper maintenance.

As previously discussed, Platform Holly and the EOF have a functionally interdependent relationship. The continuity of production from Platform Holly is contingent upon the continued operation of the EOF. Conversely, the operation of the EOF will no longer be required following the termination of production at Platform Holly. Based on our observed condition of the EOF, Venoco's historical and current maintenance practices, its ability to make capital expenditures to replace existing equipment in-kind, and the historical reliability of the facility, we conclude that the EOF can continue to process oil and gas received from Platform Holly until production from Platform Holly ends, provided that Venoco continues its normal maintenance and worn-out equipment is replaced in-kind to maintain safe operation. Therefore, the remaining useful life of the EOF is equivalent to the remaining useful life of Platform Holly.

VI. CAPITAL INVESTMENTS IN PLATFORM HOLLY AND THE EOF

Venoco's investment in Platform Holly and the EOF has been quite significant as summarized in the following table. As shown in the table below, Venoco acquired Platform Holly and the EOF for approximately $15 million in 1997 and have since invested approximately $246 million through the end of 2014.

Investment in the EOF and Platform Holly by Year

Original Acqusition (1997)	**$ 15,264,180**
Capital Expendiures by Year (From acquisition through 2014)	
1997	$ 2,333,529
1998	$ 12,206,816
1999	$ 5,005,173
2000	$ 6,140,329
2001	$ 9,984,693
2002	$ 11,493,814
2003	$ 2,458,859
2004	$ 7,810,675
2005	$ 26,514,890
2006	$ 26,581,170
2007	$ 8,878,404
2008	$ 13,803,376
2009	$ 3,083,257
2010	$ 4,696,404
2011	$ 3,595,524
2012	$ 42,014,658
2013	$ 39,445,258
2014	$ 19,693,834
Subtotal	**$245,740,663**
Total Investment	**$261,004,843**

This pattern of capital expenditures ("capex") is typical of the investment needed during production of oil and gas reserves. It shows how capital is required over time to maintain and/or increase production rates attributable to Platform Holly and the EOF.

In addition to the capex required to produce the reserves from the South Ellwood Field, capex will be required for (1) the future decommissioning and abandonment of Platform Holly and the EOF upon depletion of the oil and gas reserves and (2) the environmental remediation of the EOF Site. The following table provides an estimate of the present value of the expected costs to be incurred at the end of the reserve life for decommissioning and abandonment (it does not include the cost for environmental remediation of the EOF site because no reliable estimate is currently available, although this present-value cost could also be substantial). The present value was determined by inflating the estimated current removal costs by an annual rate of 2.5 percent to provide the removal cost in the future and then discounted at 7 percent. The current cost of decommissioning and abandonment of the EOF is assumed to be $7 million based on the Interact Removal Report. The current cost of decommissioning and abandonment of Platform Holly is assumed to be $30 million based on an estimate from Venoco. The values shown in the table assume that the City does not terminate the operation of the

EOF prior to the end of its remaining useful life and that production from the South Ellwood Field therefore ends in 2054.

Required Future Capital Expenditures (expected in 2054)

PV of Cost to Decommission and Abandon the EOF Facilities	$ 1,321,503	(1)(3)
PV of Cost to Decommission and Abandon Platform Holly	$ 5,615,451	(2)(3)
Total	**$ 6,936,954**	

Notes:
(1) Cost in 2015 is $7,060,000 based on the Interact Removal Report.
(2) Cost in 2015 is $30 million based on a Venoco estimate.
(3) Current cost inflated at 2.5% per year and discounted at 7% per year.

The present value of future capex is highly dependent of the timing of the future expenditures. Therefore, if Venoco were required by the City to accelerate decommissioning and abandonment of the EOF, and therefore the decommissioning and abandonment of Platform Holly, in 5 years (i.e., the year 2021), which is the baseline amortization period specified in the Amortization Ordinance, the present values would substantially increase and the additional cost of accelerating the decommissioning and abandonment from 2054 to 2021 would exceed $21 million, as shown below.

Cost of Accelerated Removal (assumed to be 2021)

PV of Cost to Decommission and Abandon the EOF Facilities	$ 5,455,634
PV of Cost to Decommission and Abandon Platform Holly	$ 23,182,581
Total	**$ 28,638,215**
Additional Cost	**$ 21,701,260**

Therefore, the total capital investment in Platform Holly and the EOF, including the costs involved with the accelerated decommissioning and abandonment of those facilities, would be approximately $290 million which does not include future capex for environmental remediation of the EOF Site.

VII. FEASIBILITY OF RELOCATING THE EOF

In order to determine the appropriate amortization period for the operation of the EOF, it is first necessary to determine whether it is feasible to relocate the EOF. If it is feasible, then Platform Holly could continue to produce oil and gas from the South Ellwood Field following the relocation, and the cost for such relocation would be taken into account in determining a reasonable amortization period. If it is not feasible, then Platform Holly would have to cease production when the operation of the EOF terminates, due to their interdependency, and the determination of the amortization period must necessarily take

into account the existing complex, including both Platform Holly and the EOF and Venoco's significant capital investments in these integrated facilities.

As previously discussed, the feasibility of relocation should be based on its expense and practicality. With regard to the cost of potentially relocating the EOF, Venoco retained InterAct to identify and prepare cost analyses for possible relocation scenarios. In March 2015, InterAct identified four potential relocation scenarios as presented in the InterAct Relocation Report, which scenarios are described in the following paragraphs.

Scenario 1 – Dry Oil to LFC via Existing Onshore Line, All Water and Gas Re-Injected at Platform Holly

Produced oil would be separated from gas and water offshore, and dry oil would leave the platform. All water would be injected offshore, and the current onshore disposal well would be abandoned. Waste water from LFC would be trucked out to an approved disposal facility. All gas and associated saleable byproducts would be injected back into the field rather than sold. Note that the field has limited capacity for gas injection.

The dry oil would travel to LFC via (1) the existing 6" offshore emulsion line from Platform Holly to the EOF location, (2) through a to-be-constructed tie-in point at the EOF to the existing oil sales Line 96, (3) through existing Line 96 to (4) a to-be-constructed tie-in point at the entrance to LFC to (5) a to-be-constructed pipeline to a LFC pad to be purchased by Venoco. A dry oil receiving station would be constructed at the LFC pad.

The dry oil receiving station would include two 10,000 bbl tanks: (1) clean oil heated tank to keep oil at 130 degrees Fahrenheit, (2) heated reject tank for upset conditions and to allow for waste water to be trucked out of LFC. The tanks and process equipment would be tied into the LFC Facility's existing VRU/flare system. The power for the receiving station would be supplied by the existing SCE power station at LFC. A fresh water supply well would be drilled to supply water for the facility and for fire protection. A fire water system would be installed at the new LFC dry oil receiving station. The approximate 0.7 miles of Line 96 from LFC entrance to the tie-in point to the Plains Pipeline would be abandoned in place and the associated equipment removed.

Chemicals and heat would be added to the dry oil on the platform to prevent asphaltene break out in the pipeline from the platform to LFC. Pigging and leak detection equipment would be installed on Platform Holly and at LFC. Some cathodic protection equipment would be kept at the EOF for pipeline protection. Under this scenario, the oil H_2S content in the sales line would increase significantly due to the limited processing capability offshore.

There is no deck space or structural capacity on Platform Holly to construct a full offshore gas processing plant. The untreated gas would be injected into the Rincon zone, which is currently permitted for gas injection, but has limited capacity.

Equipment must periodically be shut down for maintenance and/or repair. During these shutdowns, and without the ability to rely on EOF for gas handling, produced gas would have to be flared. In order to flare gas for these short events, a triazine tower must be constructed on the platform to remove its H_2S content. Current deck space is not sufficient on the platform, and an extension of deck space would be constructed for this equipment.

Produced water would be injected offshore. The offshore injection wells currently take 16,000 bw/d; water is injected into the Monterey zone, which is currently permitted for water injection. The onshore EOF well WWD1 takes the remaining produced water. Under all scenarios, InterAct assumed that the onshore EOF well WWD1 would be abandoned, and an additional well would be drilled offshore to take the excess produced water. The injection pumps on Platform Holly would be upgraded or replaced because the existing pumps are at capacity. One new injection well and an upgraded Platform Holly water injection pump are included in the cost estimate.

SCE currently provides power to Platform Holly through its substation co-located at the EOF via Venoco's switchgear, transformers, and power cable to the platform. Under all scenarios, the SCE substation would remain and be modified so as to allow removal of Venoco's transformers and switchgear. The SCE substation would provide power directly to Venoco's existing power cable to the platform. The substation is owned by SCE and is a conforming use.

SCG has a 1000 psi gas line at the EOF which supplies gas to Platform Holly and the EOF. Under all scenarios, the SCG line would remain and be modified so as to allow tie-in direct to Venoco's existing 4" utility line from the EOF to Platform Holly.

The order of magnitude cost for this scenario would be approximately $45 million.

Scenario 2 – Dry Oil to LFC via Existing Onshore Pipeline, Gas to LFC via New Onshore Pipeline

Scenario 2 is the same as Scenario 1 except that the produced gas would be shipped to LFC via a to-be-constructed onshore gas pipeline into a to-be-constructed LFC gas processing plant at a pad to be purchased from ExxonMobil and co-located with the new LFC dry oil receiving station.

The gas would travel to LFC (1) via the existing 6" gas line from Platform Holly to the EOF location, (2) through a to-be-constructed tie-in point at the EOF, (3) through the new to-be-constructed onshore gas line (4) to a to-be-constructed tie-in point at the entrance to LFC (5) to a to-be-constructed pipeline to the LFC pad to be purchased by Venoco. A gas processing plant would be constructed at the LFC pad. Additional acreage at the pad would be purchased from ExxonMobil and co-located with the new LFC dry oil receiving station. The new onshore gas line between the EOF and LFC would follow the same path as Line 96.

Based on discussion with ExxonMobil, there is currently capacity at the POPCO gas plant at LFC, but ExxonMobil plans to idle the plant in 2018 and re-inject all their produced gas back into the formation for pressure maintenance. Once ExxonMobil stops its flow of gas to POPCO, the plant will be idled unless there is at least 25,000 MCFD throughput to keep it online. Venoco's production of 3,200 MCFD is far below the minimum throughput for the POPCO plant. Thus, this scenario includes the construction of a new gas processing plant at LFC.

The new gas plant would include construction of NGL/LPG tankage. Some of the NGL/LPG's would be injected into the oil sales line (150 BPD) and some would be sent to XOM (50 BPD) at their Sour Gas Treating Plant (SGTP). A tie-in point from the new gas plant to the existing SCG sales pipeline at LFC would be constructed.

The order of magnitude cost of this scenario would be $109 million.

Scenario 3 – Dry Oil to LFC via Existing Onshore Line, Gas to LFC via New Offshore Line

Scenario 3 is the same as Scenario 2 except that the produced gas would be shipped to LFC via a to-be-constructed offshore pipeline into the to-be-constructed LFC gas processing plant. The offshore portion of the new pipeline would be approximately 10 miles and the onshore portion would be approximately 3 miles.

The gas pipeline would use ExxonMobil's 9-foot diameter tunnel for crossing the railroad and U.S. Highway 101 if there is room or Horizontal Directional Drill (HDD) if there is not adequate space available.

The order of magnitude cost of this scenario is $166 million. There are no local marine vessels that could lay such a line, so this cost includes mobilizing a vessel from out of State, or possibly out of country, depending on market conditions and vessel availability at the time of installation.

Scenario 4 – Dry Oil and Gas to LFC via New Offshore Lines

Scenario 4 is the same as Scenario 3 except that both dry oil and gas would be shipped to LFC via to-be-constructed offshore pipelines. The offshore portion of the new pipelines would be approximately 10 miles each and the onshore portion would be approximately 3 miles each.

The order of magnitude cost of this scenario is $233 million. It is anticipated that cargo barges (with associated equipment), in addition to a pipe lay vessel, would be required to bring the required 20 miles of pipeline into California.

Feasibility of Relocation Scenarios

As set forth above, the base cost of the four relocation scenarios ranges from $45 million (under Scenario 1) to $233 million (under Scenario 4). However, as discussed in the InterAct Relocation Report, the implementation of these relocation scenarios involve significant additional costs that were not, and in most cases could not be, quantified at the time the report was prepared. For example, none of the cost estimates include the costs of satisfying mitigation measures and project conditions imposed in connection with the permits and approvals required to implement the relocation scenarios. These costs could be substantial.

In addition, they do not take account of the additional costs relating to the accelerated decommissioning and abandonment of the EOF improvements or the accelerated environmental remediation costs associated with the abandonment of the EOF. As discussed in more detail in following sections, it has been determined that, based on the oil and gas reserves in the South Ellwood Field that Venoco currently has the right to produce from Platform Holly pursuant to the State Leases, the EOF would continue to process that oil and gas until the reserves may no longer be economically recovered. In the InterAct Removal Report, it is estimated the cost to remove all of the above-ground facilities at the EOF would be $7,060,000.

Moreover, none of the cost estimates include the cost of the eventual decommissioning and abandonment of the new facilities and improvements that would be constructed at LFC under the various scenarios.

As also discussed in the InterAct Relocation Report, the operating costs for the required new facilities at LFC would be higher because Venoco would be required to pay shared costs for road and pipe rack maintenance, security staff, VRU/flare system maintenance and other common services and operating systems. These increased costs were also omitted.

The cost analysis of all of the scenarios also assumed that certain facilities and improvements would remain in place on and under the EOF Site after the EOF is otherwise abandoned and removed, including the SCE substation that provides electricity for Platform Holly, the gas source line that provides a conduit to provide natural gas for the drilling generators on Platform Holly, buried oil and gas lines with associated cathodic protection and pigging equipment. It is uncertain whether the City would permit the continued use of these facilities and improvements if it terminated the operation of the EOF pursuant to Amortization Ordinance. If it did not, the costs to permit, relocate, reconstruct, and reinstall these facilities and improvements would be substantial (assuming, as discussed below, it is feasible to do so).

It is also important to note that Scenario 1 would only permit oil and gas production from Platform Holly to continue for an additional five years, which would not sufficient to allow production of the reserves present in the South Ellwood Field.

Finally, the cost analysis for Scenario 2 omitted the cost to acquire the additional right-of-way required to construct a new 9.6-mile sour gas line from the EOF tie-in to the new gas plant that would be constructed at LFC. This cost would be significant, assuming it is feasible.

Accordingly, the actual costs of the four relocation scenarios would significantly exceed the base relocation costs set forth in the InterAct Relocation Report.

In order to evaluate properly the feasibility of the four relocation scenarios, it is also necessary to investigate whether they are practical, or not, for other reasons. These include political and environmental concerns, as well as the ability to acquire a needed right-of-way. While we have not independently investigated these issues, Venoco has provided us with a summary of the political, environmental and logistical risks associated with the potential pursuit of the relocation scenarios, which are set forth below.

All of the relocation scenarios would require various State and local permits and approvals and related environmental review under the California Environmental Quality Act ("CEQA"). Given the local antipathy to oil production, it is anticipated that there would be considerable opposition to any of the relocation scenarios on environmental and other grounds. There is a possibility, which Venoco believes is substantial, that the required permits and approvals would not be granted, particularly with respect to Scenarios 2, 3, and 4, or, if they are granted, a substantial likelihood that they would be challenged in court. It would take approximately four years to obtain the required entitlements under any of the scenarios, and litigation would delay implementation of the chosen scenario for several more years.

As previously discussed, the applicable permits and approvals, if granted, would be subject to mitigation measures and conditions of approvals. It is possible that Venoco would not, as a practical matter, be able to comply with all of them.

As also previously discussed, the cost analysis of all of the scenarios also assumed that certain facilities and improvements would remain in place on and under the EOF Site after the EOF is otherwise abandoned and removed, including the SCE electrical substation that provides electricity for Platform Holly, the gas source line that provides a conduit to provide natural gas for the drilling generators on Platform Holly, buried oil and gas lines with associated cathodic protection, and pigging equipment. If and to the extent the City would not permit the continued use of these facilities and improvements, it is uncertain whether their relocation is feasible.

In addition to these substantial political and environmental obstacles, Scenario 2 also requires the acquisition of 9.6 miles of additional right-of-way between the EOF Site and LFC for the installation of the new onshore sour gas line that is required. Venoco does not believe that it would be possible to obtain the necessary right-of-way condemnation authority, and no such authority exists because the gas line would not be a common carrier line.

Based on the foregoing discussion, Venoco has reached the following conclusions regarding the expense and practicality of the four potential relocation scenarios (which it intends to document in more detail as an adjunct to this Study):

- Scenario 1 is infeasible because it would involve significant cost (a base cost of $45 million) and entitlement risk, but would only extend the life of Platform Holly for an additional five years.

- Scenario 2 is infeasible because it would not be possible to acquire the necessary onshore right-of-way to install the required 9.6-mile sour gas line and, even if such acquisition was possible, Scenario 2 would involve significant cost (a base cost of $109 million) and entitlement risk.

- Scenarios 3 and 4 are infeasible for several, interrelated reasons. First, their costs are quite significant, including base costs of $166 million and $233 million, respectively, and the numerous and cumulative significant additional costs described above, which cannot be fully quantified yet. Second, because these scenarios require the installation of new offshore oil and gas lines that would be 10 miles in length, they pose the most significant entitlement risk and there is a substantial possibility that the required permits and approvals would not be granted or subject to mitigation measures that could not be fully satisfied. These scenarios also present the greatest likelihood of litigation. Third, it is uncertain whether Venoco could relocate the facilities and improvements on the EOF that the InterAct Relocation Report assumes would remain in place, if the City requires their relocation. Venoco also notes that, based on past performance, the continued operation of the EOF for the remaining useful life of Platform Holly would result in less environmental impact than the implementation of Scenario 3 or 4.

Therefore, based on the significant costs involved to pursue the relocation scenarios, together with the significant entitlement risks and other challenges discussed above, Venoco, with the assistance of a third-party consultant, has determined that they are infeasible based on their expense and impracticality.

VIII. REMAINING LIFE OF THE SOUTH ELLWOOD FIELD

In evaluating the remaining life of Platform Holly and the EOF, it is necessary to consider the remaining reserves to be produced from Venoco's State Leases in the South Ellwood Field. Oil and gas companies prepare reserves estimates on a regular basis because of the importance of reserve estimates to operations and investment planning, as well as the impact on financial reporting. Venoco prepares reserve estimates annually in accordance with requirements of the Securities and Exchange Commission, Rules 4-10(a) (1)-(32) of Regulation S-X.

Venoco uses DeGolyer and MacNaughton as its independent reserves auditor. The following table summarizes the results of DeGolyer and MacNaughton's annual

evaluation of Venoco's State Leases at the South Ellwood Field for the years 2011 through 2014, which are the most recently filed evaluations. The table presents DeGolyer and MacNaughton's estimate of the last month of production based on the time required to recover the reserves. The "remaining life" of the reserves is calculated as the number of years between the year in which the last month of production occurs and the year for which the evaluation is made.

Reserve Category	2011	2012	2013	2014	Average
Month of last production	12/2055	1/2049	12/2049	10/2049	
Remaining life	44	37	36	35	38

As a result of the continuing volatility in oil markets, it is appropriate to take a longer-term view when evaluating the remaining useful life of Venoco's State Leases. To provide a more realistic assessment of the remaining reserves, we have made that determination based on the average for the years 2011 to 2014. This approach avoids placing too much emphasis on a single year, which can be misleading due to the volatility of the oil and gas markets. Using this approach, the remaining life of Venoco's reserves in the South Ellwood Field is approximately 38 years.

IX. REASONABLE AMORTIZATION PERIOD

The determination of a reasonable amortization period for the EOF is dependent on the reserves associated with Platform Holly in the South Ellwood Field and the viability of relocating the EOF. Venoco has invested approximately $246 million in Platform Holly and the EOF since it acquired those facilities to increase oil and gas production and is dependent on the EOF to process the production. As indicated above, capital expenditures in the oil and gas industry are made over a long time horizon in order to fully produce reserves despite volatility in the commodity markets for oil and gas. Investment continues until such a point that all of the reserves that can be economically produced have been recovered.

Venoco acquired and made significant capital investments in Platform Holly and the EOF solely for the purpose of producing the oil and gas permitted under the State Leases, which are considered current and active until Venoco discontinues production, at which time the State of California may choose to terminate them. Venoco made these investments, which currently total approximately $261 million, with the reasonable expectation that it would be able to recover all of the economically-producible reserves available.

The functions provided by Platform Holly and the EOF are both needed to produce the oil and gas reserves contained in Venoco's State Leases. Venoco relies on the EOF to process the oil and gas production from Platform Holly and transfer it to market for sale, supply natural gas to safely operate the flare pilot and power generation for Platform Holly, and dispose of waste water from Platform Holly. Conversely, Platform Holly supplies feedstock to the EOF by producing oil and gas from Venoco's State Leases.

Venoco has determined that the relocation of the EOF is not financial feasible under any relocation scenario. If the EOF were forced to shut down, there would be no way to fully replace its function and Platform Holly would also have to be shut-in within a short period of time. Depending on when this outcome occurs, a significant amount of oil and gas contained in the South Ellwood Field would remain unproduced. In additional, accelerating the shutdown of Platform Holly and the EOF would increase the cost of decommissioning and abandonment by more than $21 million.

Venoco has and will continue to maintain both Platform Holly and the EOF in operable condition to produce the reserves contained in the State Leases. The current facilities that comprise Platform Holly and the EOF are designed, constructed, and maintained to have a useful life equivalent to recoverable reserves. The operation of Platform Holly and the EOF will terminate only when the recoverable reserves under the State Leases have been produced. Thus, the remaining useful life of Platform Holly and the EOF depends on the remaining life of the oil and gas reserves in place.

Significant quantities of oil and gas are currently present in the South Ellwood Field. Based on recent reserve estimates that are consistent with SEC filing requirement for oil and gas reserves, the remaining useful life of the recoverable reserves in the South Ellwood Field that can be produced by Platform Holly under its existing State Leases is estimated to be at least 38 years, as previously discussed.

Given the significant capital investments already made, and based on applicable California law, it is reasonable and appropriate to determine the amortization period for the integrated complex based on its remaining useful life. Since the remaining life of the reserves is at least 38 years, the remaining useful life of Platform Holly and, therefore, the EOF, is also at least 38 years. Accordingly, the amortization period for the EOF is a minimum of 38 years.

By comparison, the Amortization Ordinance allows a maximum amortization period of 20 years, regardless of the capital investment in a legal nonconforming use, its actual remaining useful life, or any other factor that could require a longer period. Given our analysis and conclusions, we believe that, in the event the City attempts to terminate the use of the EOF (and, therefore, Platform Holly) in accordance with the procedures in the Amortization Ordinance, that process would fail to provide an adequate or reasonable amortization period prior to the mandatory termination of those uses.

APPENDICES

APPENDIX A – TERMS AND CONDITIONS

The general terms and conditions pertaining to the conclusion(s) stated in this Study are summarized below. If applicable, "special assumptions" are cited elsewhere in this Study.

1. To the best of our knowledge and belief, the statements of fact contained in this Study, upon which our analysis and conclusion(s) expressed are based, are true and correct. Information, estimates and opinions furnished to us and contained in this Study or utilized in the formation of the conclusion(s) were obtained from sources considered reliable and believed to be true and correct. However, no representation, liability or warranty for the accuracy of such items is assumed by or imposed on us.

2. The analysis was prepared solely for the purpose, function and party so identified in this Study.

3. We take no responsibility for any events, conditions or circumstances affecting the subject asset(s) or its value, that take place subsequent to either the effective date of analysis cited in the appraisal or the date of our field inspection, whichever occurs first.

4. We assume no responsibility and make no representations with respect to the accuracy or completeness of any information provided by and on behalf of Venoco.

5. The conclusion(s) stated in this Study applies only to the effective date stated in this Study. We assume no liability for an unforeseen change in the economy, or at the subject property, if applicable.

APPENDIX B – SOURCES OF INFORMATION

In the course of our valuation analysis, we relied upon financial and other information from Management and various public, financial, and industry sources. Our conclusion is dependent on such information being complete and accurate in all material respects. The principal sources of information utilized in performing our analysis include:

1. *"Holly Equipment List 2014".*
2. *"Ellwood Equipment List 2014".*
3. *Onshore Facilities Plot Plan Index, South Ellwood Field, Santa Barbara, California," prepared by M.L. Locky.*
4. *"Net Lease Operating Expenses: Ellwood 1997-2014".*
5. *"Net Lease Operating Expenses: Las Flores 1997-2014".*
6. *"Information and Analysis for Santa Barbara County's Amortization of Venoco, Inc.'s South Ellwood Field,"* prepared by Venoco, Inc. January 25, 2001.
7. *"Venoco Ellwood Onshore Facility (EOF) Relocation Alternatives and Costs – March 2015,"* prepared by InterAct.
8. *"Venoco Ellwood Onshore Facility (EOF) Aboveground Facilities Removal Cost Estimates – March 2015,"* prepared by InterAct.
9. *"Reserves Evaluation as of December 31, 2010,"* prepared by DeGolyer and MacNaughton.
10. *"Appraisal Report as of December 31, 2011 on Certain Properties owned by Venoco, Inc."* prepared by DeGolyer and MacNaughton.
11. *"Reserves Evaluation as of December 31, 2011,"* prepared by DeGolyer and MacNaughton.
12. *"Appraisal Report as of December 31, 2012 on Certain Properties owned by Venoco, Inc."* prepared by DeGolyer and MacNaughton.
13. *"Reserves Evaluation as of December 31, 2012,"* prepared by DeGolyer and MacNaughton.
14. *"Appraisal Report as of December 31, 2013 on Certain Properties owned by Venoco, Inc."* prepared by DeGolyer and MacNaughton.
15. *"Reserves Evaluation as of December 31, 2013,"* prepared by DeGolyer and MacNaughton.
16. *"Appraisal Report as of December 31, 2014 on Certain Properties owned by Venoco, Inc."* prepared by DeGolyer and MacNaughton.
17. *"State Lands Commission: State of California Oil and Gas Lease PRC 3120".*
    "State Lands Commission: State of California Oil and Gas Lease PRC 3242.1".
18. "Venoco, Inc. 2015 Budget Forecast, assumes 1/26/2015 strip and differentials, South Ellwood".
19. "County of Santa Barbara Energy Division: Ellwood Amortization Analysis, October 2001," prepared by Baker & O'Brien.
20. "County of Santa Barbara Energy Division: Ellwood Amortization Analysis Appendices, October 2001," prepared by Baker & O'Brien.
21. "County of Santa Barbara Energy Division: Ellwood Amortization Analysis Appendices, October 2001," prepared by Baker & O'Brien.

22. "United Business Com. v. City of San Diego, 91 Cal.App.3d 156 (1979), 154 Cal. Rptr. 263".
23. Halland, Håvard, Martin Lokanc, Arvind Nair, and Sridar P. Kannan. The Extractive Industries Sector: Essentials for Economists, Public Finance Professionals, and Policy Makers.

APPENDIX C – PHOTOGRAPHS FROM SITE INSPECTION

H-206 & H-207: Combustion Burners

V-221: Relief Scrubber
H-205 & H-206: Combustion Burners

H-204: Process Fluid Heater (Uniflux)
V-221: Relief Scrubber

HT-203: Heater Treater

HT-201 & HT-202: Heater Treaters

HT-201: Heater Treater

E-102: Therminol / Crude Exchanger
E-201 A&B: Emulsion / Crude Exchanger
E-201C&D: Therminol / Emulsion Exchanger

V-203: Inlet Scrubber

V-201 & V-202: Hydrogen Sulfide Strippers

F-215: Filter Separator

F-MEM-01 through F-MEM-14: Tube Membrane Units

V-221: Relief Scrubber
V-213: Process Fluid Surge Tank (Therminol)

Maintenance Office

Sheds

TK-202: Oil Shipping Tank
TK-203: Oil Surge Tank

TK-204: Wet Oil Tank

E-213: Stabilizer Reboiler
V-214: Stabilizer
V-215 & V-216: Debutanizer

P-206 A & B: Firewater Pumps

TK-218: Lube Oil Storage Tank
TK-205 & TK-206: Fresh and Fire Water Tank
P-206 A & B: Firewater Pumps

K-206: Compressor

TK-205 & TK-206: Fresh and Fire Water Tank
P-206 A & B: Firewater Pumps

K-205: Compressor

V-206: 2nd Stage Suction Scrubber

E-203, E-204, & E-205: Air Coolers

Control Room, Offices, Electrical Room

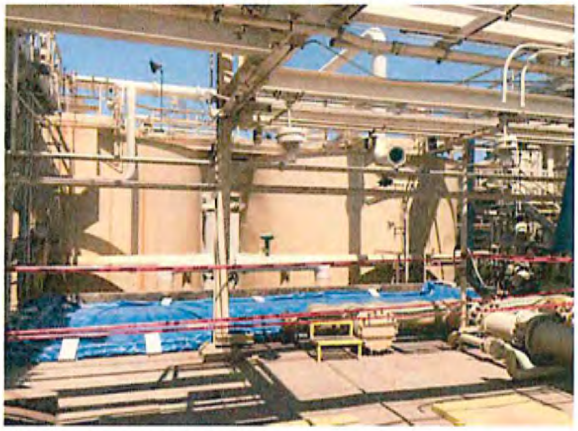

TK-1902 & TK-1903: Oxidizers

TK-1903: Oxidizer

P-1510 & P-1511: Vacuum Lo-Cat Pumps

BL-1801 & BL-1802: Oxidizer Blowers
F-1801 & F-1802: Oxidizer Blower Filters–

TK-1901: Oxidizer Vapor Tank

V-1201 & V-1202: Separator Drums
V-1203: Wash Drum

Gas Sales Meter

APPENDIX D – EQUIPMENT LIST

Equip. #	Equip.#	Description	EqType	P&ID #
P-101A	EOF-P-101A	PUMP, CHEMICAL, MEHANOL NORTH	PUMP	9769
P-101B	EOF-P-101B	PUMP, CHEMICAL, MEHANOL SOUTH	PUMP	9769
P-102A	EOF-P-102A	PUMP,CHEMICAL INJECTION	PUMP	9769
P-102B	EOF-P-102B	PUMP,CHEMICAL INJECTION	PUMP	9769
P-103A	EOF-P-103A	PUMP, CHEMICAL INJECTION	PUMP	9769
T-101A	EOF-T-101A	TANK, METHNOL STORAGE	TNK	9769
T-101B	EOF-T-101B	TANK, METHNOL STORAGE	TNK	9769
T-101C	EOF-T-101C	TANK, METHNOL STORAGE	TNK	9769
T-101D	EOF-T-101D	TANK, METHNOL STORAGE	TNK	9769
T-102A	EOF-T-102A	TANK, CHEMICAL STORAGE	TNK	9769
T-102B	EOF-T-102B	TANK, CHEMICAL STORAGE	TNK	9769
T-103	EOF-T-103	TANK, CHEMICAL STORAGE	TNK	9769
T-104	EOF-T-104	TANK, CHEMICAL STORAGE	TNK	9769
P-101A	EMT-P-101A	PUMP,SHIPPING,MARINE TERMINAL	PUMP	12181
P-101B	EMT-P-101B	PUMP,SHIPPING,MARINE TERMINAL	PUMP	12181
T-I	EMT-T-I	TANK,OIL,1000bbl,LEASE421	TNK	12181
T-8264	EMT-T-8264	TANK,OIL,56,000 BBL	TNK	12181
T-8265	EMT-T-8265	TANK,OIL,56,000 BBL	TNK	12181
V-OO	EMT-V-OO	VESSEL,RECEIVER / AIR ELIMINATOR	VSSL	12181
V-IOA	EMT-V-IOA	VESSEL,PULSATION DAMPNER, EAST	VSSL	12181
V-0B	EMT-V-0B	VESSEL,PULSATION DAMPNER, WEST	VSSL	12181
T-8267	EMT-T-8267	TANK,LUBE OIL,P-101A,P-101B	TNK	12182
T-8266	EMT-T-8266	TANK,FIREWATER,10,000BBL	TNK	12183
P-207B	EOF-P-207B	PUMP,GLYCOL	PUMP	9760-13
V-210	EOF-V-210	REGENERATOR, GLYCOL	VSSL	9760-13
V-205	EOF-V-205	SCRUBBER, 1ST STG SUCTION, K-201	VSSL	9760-10
V-206	EOF-V-206	SCRUBBER, 2ND STG SUCTION, K-201	VSSL	9760-10
V-207	EOF-V-207	SCRUBBER, 2ND STG DISCHARGE, K-201	VSSL	9760-10
V-208	EOF-V-208	SCRUBBER, 3RDSTGSUCTIONK201	VSSL	9760-10
K-201	EOF-K-201	COMPRESSOR, SALES GAS, DELAVAL,	COMP	9760-11A
V-K201V1	EOF-V-K201V1	BOTTLE, 1ST STG SUCTION, K-201	VSSL	9760-11A
V-K201V2	EOF-V-K201V2	BOTTLE, 1ST STG DISCH, K-201	VSSL	9760-11A
V-K201V3	EOF-V-K201V3	BOTTLE, 2ND STG SUCTION, K-201	VSSL	9760-11A
V-K201V4	EOF-V-K201V4	BOTTLE, 2ND STG DISCH, K-201	VSSL	9760-11A
V-K201V5	EOF-V-K201V5	BOTTLE, 3RD STG SUCTION, K-201	VSSL	9760-11A
V-K201V6	EOF-V-K201V6	BOTTLE, 3RDSTGDISCH, K-201	VSSL	9760-11A
E-203	EOF-E-203	COOLER, AIR, FAN, A&B, 1ST STG, K-201	EX	9760-11B
E-204	EOF-E-204	COOLER, AIR, FAN, A&B, 2ND STG, K-201	EX	9760-11B
E-205	EOF-E-205	COOLER, AIR, 3RD STG GAS, K-201	EX	9760-11B
F-201	EOF-F-201	SEPARATOR, FILTER, K-201, K-205, K-206	FLTR	9760-11B
E-216	EOF-E-216	RADIATOR, COMPRESSOR, K-201	EX	9760-11C
E-219	EOF-E-219	COOLER, OIL, K-201	EX	9760-11C
P-219	EOF-P-219	PUMP, COOLING WATER, K-201	PUMP	9760-11C
P-236	EOF-P-236	PUMP, LUBEOIL, K-201	PUMP	9760-11C
P-257	EOF-P-257	PUMP, TRABON LUBE, K-201	PUMP	9760-11C
E-206	EOF-E-206	COOLER, G-FIN,K-202	EX	9760-12
E-207	EOF-E-207	CHILLER, RICH GAS,K-202	EX	9760-12
E-208	EOF-E-208	CHILLER, GLYCOL/WATER, BRINE, K-202	EX	9760-12
P-204A	EOF-P-204A	PUMP, CHILLED WATER, E-208	PUMP	9760-12
V-241	EOF-V-241	VESSEL, PROPANE, K-202	VSSL	9760-12
V-244	EOF-V-244	SCRUBBER, OIL RECOVERY, K-202	VSSL	9760-12
E-210A	EOF-E-210A	EXCHANGER, FAN, REFRIGERATION UNIT EAST K-202	FF	9760-12A
E-210B	EOF-E-210B	EXCHANGER, FAN, REFRIGERATION UNIT EAST MIDDLE K-202	FF	9760-12A
E-210C	EOF-E-210C	EXCHANGER, FAN, REFRIGERATION UNIT WEST MIDDLE K-202	FF	9760-12A
E-210D	EOF-E-210D	EXCHANGER, FAN, REFRIGERATION WEST UNIT K-202	FF	9760-12A
F-214A	EOF-F-214A	FILTER,FINFAN,E-210A	FLTR	9760-12A
F-214B	EOF-F-214B	FILTER,FINFAN,E-210B	FLTR	9760-12A
F-214C	EOF-F-214C	FILTER,FINFAN,E-210C	FLTR	9760-12A
F-214D	EOF-F-214D	FILTER,FINFAN,E-210D	FLTR	9760-12A
K-202	EOF-K-202	COMPRESSOR, REGRIG, YORK	COMP	9760-12A
V-244A	EOF-V-244A	RECEIVER, LIQUID OFF, SHUTDOWN, K-202	VSSL	9760-12A
V-245	EOF-V-245	RECEIVER INTERCOOLER, K-202	VSSL	9760-12A

Equip. #	Equip.#	Description	EqType	P&ID #
V-246	EOF-V-246	VESSEL, FLOAT CHAMBER, E-210	VSSL	9760-12A
E-200	EOF-E-200	EXCHANGER, FIN FAN, BLYCOL FIN TUBE	EX	9760-13
E-224A	EOF-E-224A	EXCHANGER, GLYCOL/GLYCOL, NORTH	EX	9760-13
E-224B	EOF-E-224B	EXCHANGER, GLYCOL/GLYCOL, SOUTH	EX	9760-13
F-206	EOF-F-206	FILTER,GLYCOL,VAPOR	FLTR	9760-13
F-207	EOF-F-207	FILTER,GLYCOL CHARCOAL	FLTR	9760-13
F-208	EOF-F-208	FILTER, GLYCOL SOCK	FLTR	9760-13
P-207A	EOF-P-207A	PUMP,GLYCOL	PUMP	9760-13
P-207C	EOF-P-207C	PUMP,GLYCOL	PUMP	9760-13
V-209	EOF-V-209	SEPARATOR, GLYCOL	VSSL	9760-13
V-210A	EOF-V-210A	TANK, GLYCOL DRIP	VSSL	9760-13
V-211	EOF-V-211	VESSEL, GLYCOL FLASH	VSSL	9760-13
BL-730	EOF-BL-730	BLOWER,H-204	BLW	9760-14
H-204	EOF-H-204	HEATER, PROCESS	HTR	9760-14
H-208	EOF-H-208	HEATER, THERMINOL	HTR	9760-14
P-208	EOF-P-208	PUMP,GLYCOL	PUMP	9760-14
P-209A	EOF-P-209A	PUMP,PROCESS FLUID,DISCH,V-213	PUMP	9760-14
P-209B	EOF-P-209B	PUMP,PROCESS FLUID,DISCH,V-213	PUMP	9760-14
V-212	EOF-V-212	TANK, GLYCOL STORAGE	VSSL	9760-14
V-213	EOF-V-213	TANK, SURGE, PROCESS FLUID	VSSL	9760-14
E-211	EOF-E-211	REBOILER STABILIZER, V-214	EX	9760-15
E-212	EOF-E-212	EXCHANGER, LPG, SWEET	EX	9760-15
V-214	EOF-V-214	SCRUBBER, LPG/NGL FLUOR	VSSL	9760-15
E-213	EOF-E-213	REBOILER STABILIZER, V-214	EX	9760-16
E-214	EOF-E-214	CONDENSER, DEBUTANIZER	EX	9760-16
E-215	EOF-E-215	COOLER, DEBUTANIZER BOTTOM	EX	9760-16
H-205	EOF-H-205	HEATER, HIRT BURNER	HTR	9760-16
V-215	EOF-V-215	VESSEL, DEBUTANIZER LOWER	VSSL	9760-16
V-216	EOF-V-216	VESSEL DEBUTANIZER UPPER	VSSL	9760-16
P-212A	EOF-P-212A	PUMP, LPG/NGL LOADING	PUMP	9760-17
P-212B	EOF-P-212B	PUMP, LPG/NGL LOADING	PUMP	9760-17
V-217	EOF-V-217	ACUMULATOR REFLUX	VSSL	9760-17
V-218	EOF-V-218	TANK, LPG STORAGE	VSSL	9760-17
V-219	EOF-V-219	TANK, LPG STORAGE	VSSL	9760-17
V-220	EOF-V-220	SCRUBBER, VAPOR RETURN	VSSL	9760-17
V-227	EOF-V-227	VESSEL, NGL STORAGE	VSSL	9760-17
V-228	EOF-V-228	TANK, LPG STORAGE	VSSL	9760-17
P-245A	EOF-P-245A	PUMP, NGL INJ	PUMP	9760-17A
P-245B	EOF-P-245B	PUMP, NGL INJ	PUMP	9760-17A
BL-206	EOF-BL-206	BLOWER,BURNER,HIRT	BLW	9760-18
V-221	EOF-V-221	SCRUBBER RELIEF	VSSL	9760-18
H-206	EOF-H-206	HEATER, BURNER, HIRT	HTR	9760-18A
H-207	EOF-H-207	HEATER, FLARE UNIT, HIRT BURNER	HTR	9760-18A
E-218A	EOF-E-218A	EXCHANGER, 1ST AND 2ND STAGE DISCH COOLER, K-205,K-206	EX	9760-19
E-218B	EOF-E-218B	EXCHANGER, 1ST AND 2ND STAGE DISCH COOLER, K-205,K-206	EX	9760-19
E-218C	EOF-E-218C	EXCHANGER, 1ST AND 2ND STAGE DISCH COOLER, K-205,K-206	EX	9760-19
E-218D	EOF-E-218D	EXCHANGER, 1ST AND 2ND STAGE DISCH COOLER, K-205,K-206	EX	9760-19
E-225	EOF-E-225	EXCHANGER, 3RD STG DISCHARGE	EX	9760-19
E-226	EOF-E-226	EXCHANGER, JACKET WATER, FIN TUBE	EX	9760-19
P-226	EOF-P-226	PUMP, JACKET WATER, K-205, K-206	PUMP	9760-19
P-229	EOF-P-229	PUMP, JACKET WATER, K-205, K-206	PUMP	9760-19
TK-240A	EOF-TK-240A	TANK, CHEMICAL	TNK	9760-19
TK-240	EOF-TK-240	TANK, JACKET WATER SURGE	TNK	9760-19
V-229	EOF-V-229	SCRUBBER, 1ST STG SUCT, K-206 HHE & K-205 CFB	VSSL	9760-19
V-230	EOF-V-230	SCRUBBER, 2ND STAGE SUCTION, K-205, K-206	VSSL	9760-19
V-231	EOF-V-231	SCRUBBER, 2ND STG DISCHARGE, K-205, K-206	VSSL	9760-19
V-232	EOF-V-232	SCRUBBER, 3RD STAGE SUCTION, K-205, K-206	VSSL	9760-19
V-240	EOF-V-240	VESSEL, JACKET WATER	VSSL	9760-19
K-205	EOF-K-205	COMPRESSOR, SALES GAS, CFB	COMP	9760-19A
K-206	EOF-K-206	COMPRESSOR, SALES GAS, IR TYPE HHE	COMP	9760-19A
P-225	EOF-P-225	PUMP, LUBE OIL, K-206 HHE	PUMP	9760-19A
P-231	EOF-P-231	PUMP, LUBE OIL, K-206 HHE	PUMP	9760-19A

Equip. #	Equip.#	Description	EqType	P&ID #
V-K205V1	EOF-V-K205V1	BOTTLE, 1ST STG SUCTION, K-205	VSSL	9760-19A
V-K205V2	EOF-V-K205V2	BOTTLE, 1ST STG DISCH, K-205	VSSL	9760-19A
V-K205V3	EOF-V-K205V3	BOTTLE, 2ND STG SUCTION, K-205	VSSL	9760-19A
V-K205V4	EOF-V-K205V4	BOTTLE, 2ND STG DISCH, K-205	VSSL	9760-19A
V-K205V5	EOF-V-K205V5	BOTTLE, 3RD STG SUCTION, K-205	VSSL	9760-19A
V-K205V6	EOF-V-K205V6	BOTTLE, 3RD STG DISCH, K-205	VSSL	9760-19A
V-K206V1	EOF-V-K206V1	BOTTLE, 1ST STG SUCTION, K-206	VSSL	9760-19A
V-K206V2	EOF-V-K206V2	BOTTLE, 1ST STG DISCH, K-206	VSSL	9760-19A
V-K206V3	EOF-V-K206V3	BOTTLE, 2ND STG SUCTION, K-206	VSSL	9760-19A
V-K206V4	EOF-V-K206V4	BOTTLE, 2ND STG DISCH, K-206	VSSL	9760-19A
V-K206V5	EOF-V-K206V5	BOTTLE, 3RD STG SUCTION, K-206	VSSL	9760-19A
V-K206V6	EOF-V-K206V6	BOTTLE, 3RD STG DISCH, K-206	VSSL	9760-19A
P-260	EOF-P-260	PUMP, DIAPHRAGM, VAPOR, K-205, K-206	PUMP	9760-19B
E-102	EOF-E-102	EXCHANGER, THERMINOL	EX	9760-1A
E-201A	EoF-E-201A	EXCHANGER, CRUDE/CRUDE	EX	9760-1A
E-201B	EOF-E-201B	EXCHANGER, CRUDE/CRUDE	EX	9760-1A
E-201C	EOF-E-201C	EXCHANGER, CRUDE/CRUDE	EX	9760-1A
E-201D	EOF-E-201D	EXCHANGER, CRUDE/CRUDE	EX	9760-1A
BL-201A	EOF-BL-201A	BLOWER,HYBON	BLW	9760-2
BL-201B	EOF-BL-201B	BLOWER,HYBON	BLW	9760-2
BL-201C	EOF-BL-201C	BLOWER,HYBON	BLW	9760-2
P-201A	EOF-P-201A	PUMP, WATER INJECTION	PUMP	9760-2
P-201B	EOF-P-201B	PUMP, WATER INJECTION	PUMP	9760-2
P-201C	EOF-P-201C	PUMP, WASTE WATER CHARGE	PUMP	9760-2
P-230	EOF-P-230	PUMP, STM WATER SUMP	PUMP	9760-2
S-230	EOF-S-230	SUMP, WATER RUN OFF	VSSL	9760-2
TK-201	EOF-TK-201	TANK, WASTE WATER, 3000 BBL	TNK	9760-2
V-224	EOF-V-224	SCRUBBER HYBON	VSSL	9760-2
V-114	EOF-V-114	IRON SPONGE A	VSSL	9760-21
V-115	EOF-V-115	IRON SPONGE B	VSSL	9760-21
V-116	EOF-V-116	IRON SPONGE C	VSSL	9760-21
HT-201	EOF-HT-201	HEATER TREATER	HTR	9760-22
H-202	EOF-H-202	SLOP TANK	HTR	9760-22
P-251	EOF-P-251	PUMP, TRANSFER	PUMP	9760-22
V-239	EOF-V-239	SCRUBBER, GAS OFF	VSSL	9760-22
HT-203	EOF-HT-203	HEATER TREATER	HTR	9760-23
E-217A	EOF-E-217A	FAN, EXCHANGER, JACKET WATER, K-202	FF	9760-24
E-217B	EOF-E-217B	FAN, EXCHANGER, JACKET WATER, K-202	FF	9760-24
E-220A	EOF-E-220A	JACKET WATER COOLER	EX	9760-24
E-220B	EOF-E-220B	VRU, 2ND STAGE DISCHARGE COOLER	EX	9760-24
F-209	EOF-F-209	FILTER, WATER	FLTR	9760-24
F-225	EOF-F-225	FILTER/STRAINER, FOAM, V-225	FLTR	9760-24
P-205A	EOF-P-205A	PUMP,WATERSUPPLY,TOTK-206	PUMP	9760-24
P-205B	EOF-P-205B	PUMP,WATER SUPPLY,TO TK-206	PUMP	9760-24
P-206A	EOF-P-206A	PUMP,FIREWATER,MOTORDRIVEN	PUMP	9760-24
P-206B	EOF-P-206B	PUMP,DIESEL ENGINE DRIVEN FIRE WATER	PUMP	9760-24
P-237	EOF-P-237	PUMP, IRRIGATION	PUMP	9760-24
P-243	EOF-P-243	PUMP, FIRE WATER CHARGE, 20HP	PUMP	9760-24
P-248A	EOF-P-248A	PUMP, JACKET WATER, YORK, K-202	PUMP	9760-24
P-248B	EOF-P-248B	PUMP, JACKET WATER, YORK, K-202	PUMP	9760-24
P-249A	EOF-P-249A	PUMP, JACKET WATER, K-VRU	PUMP	9760-24
P-249B	EOF-P-249B	PUMP, JACKET WATER, K-VRU	PUMP	9760-24
TK-205	EOF-TK-205	TANK, WATER, 3000 BBL	TNK	9760-24
TK-206	EOF-TK-206	TANK, WATER, 3000 BBL	TNK	9760-24
V-225	EOF-V-225	TANK, FOAM	VSSL	9760-24
P-103	EOF-P-103	PUMP,CHEMICALTRANSFER FROM TK-101	PUMP	9760-28
S-206	EOF-S-206	SUMP, SOLVENT	VSSL	9760-28
TK-101	EOF-TK-101	TANK, CHEMICAL STORAGE, FLUOR	TNK	9760-28
F-205A	EOF-F-205A	AIR DRYER	FLTR	9760-29
F-205B	EOF-F-205B	AIR DRYER	FLTR	9760-29
F-205C	EOF-F-205C	FILTER, PRE, TO AIR DRYERS, F-205A, F-205B	FLTR	9760-29
F-205D	EOF-F-205D	FILTER, AFT, TO RECEIVER	FLTR	9760-29

Equip. #	Equip.#	Description	EqType	P&ID #
F-205E	EOF-F-205E	FILTER, PRE, TO AIR DRYERS, F-205A, F-205B, VALVE ASSEMBLY	FLTR	9760-29
F-205F	EOF-F-205F	FILTER, PRE, TO AIR DRYERS, F-205A, F-205B, MOISTURE IND.	FLTR	9760-29
F-237	EOF-F-237	FILTER, AFT, TO RECEIVER	FLTR	9760-29
F-237A	EOF-F-237A	FILTER, AFT, TO V-237 RECEIVER	FLTR	9760-29
F-237B	EOF-F-237B	FILTER, DRYER	FLTR	9760-29
K-204A	EOF-K-204A	COMPRESSOR, AIR	COMPA	9760-29
K-204B	EOF-K-204B	COMPRESSOR, AIR	COMPA	9760-29
K-204C	EOF-K-204C	COMPRESSOR, AIR	COMPA	9760-29
V-237	EOF-V-237	RECEIVER, INSTRUMENT AIR	VSSL	9760-29
V-237A	EOF-V-237A	VESSEL, KNOCK OUT FREE WATER KO	VSSL	9760-29
P-214	EOF-P-214	PUMP, STORM WATER SUMP	PUMP	9760-3
P-215	EOF-P-215	PUMP, HYDROCARBON PIT	PUMP	9760-3
P-244	EOF-P-244	PUMP, OIL SUMP	PUMP	9760-3
S-201	EOF-S-201	SUMP STORM WATER,	VSSL	9760-3
S-202	EOF-S-202	SUMP, PROCESS HYDROCARBON	VSSL	9760-3
S-203	EOF-S-203	SUMP, CRUDE OIL	VSSL	9760-3
TK-207	EOF-TK-207	TANK, O2, CHEMICAL	TNK	9760-3
F-210	EOF-F-210	FILTER, GUARD BED DESSICANT	FLTR	9760-30
F-211	EOF-F-211	FILTER, COALESCING	FLTR	9760-30
F-215	EOF-F-215	FILTER, SEPARATER	FLTR	9760-30A
F-216	EOF-F-216	FILTER,COALESCING	FLTR	9760-30A
F-217	EOF-F-217	FILTER,GUARDBED	FLTR	9760-30A
F-218	EOF-F-218	FILTER,POLISHING	FLTR	9760-30A
F-MEM-13	EOF-F-MEM-13	FILTER, MEMBRANE POLISHING 13 BOT-TOP, PIPE SEGMENT	FLTR	9760-30A
F-MEM-14	EOF-F-MEM-14	FILTER, MEMBRANE POLISHING 14 BOT-TOP, PIPE SEGMENT	FLTR	9760-30A
F-MEM-01	EOF-F-MEM-01	FILTER, MEMBRANE POLISHING 1 BOT-TOP, PIPE SEGMENT	FLTR	9760-30B
F-MEM-02	EOF-F-MEM-02	FILTER, MEMBRANE POLISHING 2 BOT-TOP, PIPE SEGMENT	FLTR	9760-30B
F-MEM-03	EOF-F-MEM-03	FILTER, MEMBRANE POLISHING 3 BOT-TOP, PIPE SEGMENT	FLTR	9760-30B
F-MEM-04	EOF-F-MEM-04	FILTER, MEMBRANE POLISHING 4 BOT-TOP, PIPE SEGMENT	FLTR	9760-30B
F-MEM-05	EOF-F-MEM-05	FILTER, MEMBRANE POLISHING 5 BOT-TOP, PIPE SEGMENT	FLTR	9760-30B
F-MEM-06	EOF-F-MEM-06	FILTER, MEMBRANE POLISHING 6 BOT-TOP, PIPE SEGMENT	FLTR	9760-30B
F-MEM-07	EOF-F-MEM-07	FILTER, MEMBRANE POLISHING 7 BOT-TOP, PIPE SEGMENT	FLTR	9760-30B
F-MEM-08	EOF-F-MEM-08	FILTER, MEMBRANE POLISHING 8 BOT-TOP, PIPE SEGMENT	FLTR	9760-30B
F-MEM-09	EOF-F-MEM-09	FILTER, MEMBRANE POLISHING 9 BOT-TOP, PIPE SEGMENT	FLTR	9760-30B
F-MEM-10	EOF-F-MEM-10	FILTER, MEMBRANE POLISHING 10 BOT-TOP, PIPE SEGMENT	FLTR	9760-30B
F-MEM-11	EOF-F-MEM-11	FILTER, MEMBRANE POLISHING 11 BOT-TOP, PIPE SEGMENT	FLTR	9760-30B
F-MEM-12	EOF-F-MEM-12	FILTER, MEMBRANE POLISHING 12 BOT-TOP, PIPE SEGMENT	FLTR	9760-30B
P-218	EOF-P-218	PUMP, LUBE OIL TANK, TO COMPS	PUMP	9760-33
P-241A	EOF-P-241A	PUMP, OIL SUMP, FROM TK-100	PUMP	9760-33
P-241B	EOF-P-241B	PUMP, LUBE OIL BOOSTER, K-VRU, FROM TK-100	PUMP	9760-33
P-242	EOF-P-242	PUMP, DIESEL, TO TK-1909	PUMP	9760-33
TK-100	EOF-TK-100	TANK, LUBE OIL	TNK	9760-33
TK-218	EOF-TK-218	TANK, COMP LUBE OIL	TNK	9760-33
TK-220	EOF-TK-220	TANK, DIESEL, FIRE PUMP	TNK	9760-33
P-203	EOF-P-203	PUMP, OIL SHIPPING	PUMP	9760-35
ST-203	EOF-ST-203	STRAINER FILTER	FLTR	9760-35
K-VRU-1	EOF-K-VRU-1	COMPRESSOR, 1ST STG, K-VRU-1	COMP	9760-4
K-VRU-2	EOF-K-VRU-2	COMPRESSOR,2NDSTG,K-VRU-2	COMP	9760-4
K-VRU-3	EOF-K-VRU-3	COMPRESSOR,1ST STG,K-VRU-3	COMP	9760-4
K-VRU-4	EOF-K-VRU-4	ICOMPRESSOR,2ND STG,K-VRU-4	COMP	9760-4
V-234	EOF-V-234	VESSEL, FIRST STAGE SUCTION DUMP, K-VRU-1, K-VRU-3	VSSL	9760-4
V-235	EOF-V-235	SCRUBBER, 1ST STG SUCTION, K-VRU-1, K-VRU-3	VSSL	9760-4
V-236	EOF-V-236	SCRUBBER, 2ND STG SUCTION, K-VRU-2, K-VRU-4	VSSL	9760-4
V-201	EOF-V-201	STRIPPER, H2S, FLUOR	VSSL	9760-5
V-202	EOF-V-202	STRIPPER, H2S, FLUOR	VSSL	9760-5
P-202	EOF-P-202	PUMP, WET OIL, TO HTS	PUMP	9760-6
P-217A	EOF-P-217A	PUMP, CRUDE/CRUDE EXCHANGER	PUMP	9760-6
P-217B	EOF-P-217B	PUMP, CRUDE/CRUDE EXCHANGER	PUMP	9760-6
P-238	EOF-P-238	PUMP, OIL TRANSFER, RECYCLE, TK-202 THRU 204	PUMP	9760-6
TK-202	EOF-TK-202	TANK, OILSURGE, 2000 BBL	TNK	9760-6
TK-203	EOF-TK-203	TANK, WET OIL, 2000 BBL	TNK	9760-6
TK-204	EOF-TK-204	TANK, WET OIL, 2000 BBL	TNK	9760-6

Equip. #	Equip.#	Description	EqType	P&ID #
P-220	EOF-P-220	PUMP, CHARGE, LACT2, CHARGE	PUMP	9760-7
P-220C	EOF-P-220C	PUMP, CHARGE, LACT2, CHARGE	PUMP	9760-7
P-221	EOF-P-221	PUMP, SAMPLE, LACT UNIT 2	PUMP	9760-7
P-222	EOF-P-222	PUMP, LACT 1, CHARGE	PUMP	9760-7
ST-220	EOF-ST-220	STRAINER FILTER	FLTR	9760-7
V-220A	EOF-V-220A	DEAERATOR	VSSL	9760-7
V-220B	EOF-V-220B	DEAERATOR	VSSL	9760-7
V-220C	EOF-V-220C	TANK, SAMPLE 1	VSSL	9760-7
V-220D	EOF-V-220D	TANK, SAMPLE 2	VSSL	9760-7
V-220E	EOF-V-220E	TANK, NGL SAMPLE 3	VSSL	9760-7
E-222	EOF-E-222	CHILLER, K-VRU	EX	9760-8
P-250A	EOF-P-250A	PUMP, REGENERATOR, DISCH, V-204	PUMP	9760-8
P-250B	EOF-P-250B	PUMP, REGENERATOR, DISCH, V-204	PUMP	9760-8
V-118	EOF-V-118	SEPARATOR, NGL DISCHARGE	VSSL	9760-8
V-119	EOF-V-119	SEPARATOR, NGL INLET	VSSL	9760-8
V-203	EOF-V-203	SCRUBBER, INLET GAS, FROMHOLLY	VSSL	9760-8
V-204	EOF-V-204	SCRUBBER, INLET2NDSTG	VSSL	9760-8
E-202	EOF-E-202	EXCHANGER, PUMP SEAL WATER COOLER, NASH	EX	9760-9
S-205	EOF-S-205	SUMP, SOUR GAS LIQUID, BURIED	VSSL	9760-9
F-2201	EOF-F-2201	SEPARATOR,GASIFILTER,LOCAT	FLTR	9761-1
F-2202	EOF-F-2202	SEPARATOR,GASIFILTER,LOCAT	FLTR	9761-1
F-2203	EOF-F-2203	SEPARATOR,GASIFILTER,LOCAT	FLTR	9761-1
P-1505A	EOF-P-1505A	PUMP, SEAL WATER INJECTION, AIR DRIVEN	PUMP	9761-10
P-1505B	EOF-P-1505B	PUMP, SEAL WATER INJECTION, AIR DRIVEN	PUMP	9761-10
P-1513	EOF-P-1513	PUMP,SUMP,LOCATS-207	PUMP	9761-10
P-1907A	EOF-P-1907A	PUMP IRON CHELATE ADD,BOOSTER,TK-3101	PUMP	9761-10
P-1909	EOF-P-1909	PUMP, DIESEL INJ, LOCAT	PUMP	9761-10
S-207	EOF-S-207	SUMP, LOCAT	VSSL	9761-10
TK-1905	EOF-TK-1905	TANK, CAUSTIC, LOCAT FIBERGLASS	TNK	9761-10
TK-1906	EOF-TK-1906	TANK, CHEMICAL, CHELATE, LOCAT FIBERGLASS	TNK	9761-10
TK-1907	EOF-TK-1907	TANK, CHEMICAL, LOCAT FIBERGLASS	TNK	9761-10
TK-1909	EOF-TK-1909	TANK, DIESEL INJ	TNK	9761-10
V-1210	EOF-V-1210	TANK, WATER STORAGE	VSSL	9761-10
BL-1801	EOF-BL-1801	BLOWER,HOFFMAN,OXIDIZER,LOCAT	BLW	9761-11
BL-1802	EOF-BL-1802	BLOWER,HOFFMAN,OXIDIZER,LOCAT	BLW	9761-11
E-1302	EOF-E-1302	COOLER, AIR	EX	9761-11
F-1801	EOF-F-1801	FILTER, OXIDIZER BLOWER, BL-1801	FLTR	9761-11
F-1802	EOF-F-1802	FILTER, OXIDIZER BLOWER, BL-1802	FLTR	9761-11
BL-205	EOF-BL-205	BLOWER,BURNER,HIRT	BLW	9761-16
J-1101	EOF-J-1101	VENTUR EDUCTOR, LOCAT, V-1201	EDUC	9761-2
J-1102	EOF-J-1102	VENTUR EDUCTOR, LOCAT, V-1201	EDUC	9761-2
J-1103	EOF-J-1103	VENTUR EDUCTOR, LOCAT, V-1201	EDUC	9761-2
J-1104	EOF-J-1104	VENTUR EDUCTOR, LOCAT, V-1201	EDUC	9761-2
J-1105	EOF-J-1105	VENTUR EDUCTOR, LOCAT, V-1201	EDUC	9761-2
J-1107	EOF-J-1107	VENTUR EDUCTOR, LOCAT, V-1201	EDUC	9761-2
J-1108	EOF-J-1108	VENTUR EDUCTOR, LOCAT, V-1201	EDUC	9761-2
V-1201	EOF-V-1201	CONTACTOR LOCAT	VSSL	9761-2
V-1202	EOF-V-1202	SEPARATOR DRUM, LOCAT	VSSL	9761-2
P-1510	EOF-P-1510	PUMP,VACUUM,LOCAT	PUMP	9761-3
P-1511	EOF-P-1511	PUMPVACUUM,LOCAT	PUMP	9761-3
V-1203	EOF-V-1203	WASH, DRUM LOCAT	VSSL	9761-3
V-1206	EOF-V-1206	FLASH DRUM, LOCAT	VSSL	9761-3
V-1207	EOF-V-1207	KNOCK OUT DRUM, LOCAT	VSSL	9761-3
BL-1803	EOF-BL-1803	BLOWER, NASH VACUUM, LOCAT	BLW	9761-4
BL-1804	EOF-BL-1804	BLOWER, NASH VACUUM, LOCAT	BLW	9761-4
BL-1808	EOF-BL-1808	BLOWER,OXIDIZER LOCAT	BLW	9761-5
M-2401	EOF-M-2401	MIXER, REACTION TANK, TK-1901, LOCAT	MIXR	9761-5
TK-1901	EOF-TK-1901	TANK, REACTION, 3000BBL, LOCAT	TNK	9761-5
BL-1806	EOF-BL-1806	BLOWER,BOOSTER,TK-1903,LOCAT	BLW	9761-6
M-2402	EOF-M-2402	MIXER REACTION TANK, TK1902,LOCAT	MIXR	9761-6
M-2403	EOF-M-2403	MIXER, TK-1903,LOCAT	MIXR	9761-6
P-1902	EOF-P-1902	PUMP,SULFUR SLURRY,TRANSFER	PUMP	9761-6

Equip. #	Equip.#	Description	EqType	P&ID #
TK-1902	EOF-TK-1902	TANK, OXIDIZER, 3000BBL, LOCAT	TNK	9761-6
TK-1903	EOF-TK-1903	TANK, OXIDIZER, 3000BBL, LOCAT	TNK	9761-6
M-2407	EOF-M-2407	AGITATOR, SLURRY, LOCAT	MIXR	9761-7
M-2408	EOF-M-2408	AGITATOR, SLURRY, LOCAT	MIXR	9761-7
P-1509	IEOF-P-1509	PUMP,SULFUR SLURRY,LOCAT,TK-3103	PUMP	9761-7
TK-3103	EOF-TK-3103	TANK, SLURRY PIT SOUTH	TNK	9761-7
M-2404	EOF-M-2404	AGITATOR, SLURRY, LOCAT	IMIXR	9761-8
M-2405	EOF-M-2405	AGITATOR, SLURRY, LOCAT	MIXR	9761-8
P-1507A	EOF-P-1507A	PUMP,SULFUR SLURRY,LOCAT	PUMP	9761-8
P-SP7-1	EOF-P-SP7-1	PUMP, DIAPHRAGM, 3", TYPE5, TK-1908	PUMP	9761-8
TK-1908	EOF-TK-1908	TANK, SULFUR LOADING, LOCAT	TNK	9761-8
TK-3102	EOF-TK-3102	TANK, SLURRY PIT NORTH	TNK	9761-8
E-1701A	EOF-E-1701A	COOLING TOWER	EX	9761-9
E-1701B	EOF-E-1701B	COOLING TOWER	EX	9761-9
M-2406	EOF-M-2406	MIXER, SOLUTION MAKE-UP TANK, LOCAT	MIXR	9761-9
P-1505	EOF-P-1505	PUMP, STRETFORD SOLUTION CIRC, LOCAT	PUMP	9761-9
P-1506	EOF-P-1506	PUMP, STRETFORD SOLUTION CIRC, LOCAT	PUMP	9761-9
P-1506A	EOF-P-1506A	IPUMP,WATER INJ,SEAL,LOCAT	PUMP	9761-9
TK-1904	EOF-TK-1904	TANK, MAKEUP, LOCAT	TNK	9761-9
TK-3101	EOF-TK-3101	TANK, BALANCE	TNK	9761-9
BL-300	EOF-BL-300	BLOWER,PURGEAIR,SWGR ROOM	BLW	E-E-917
V-421	EMT-V-421	VESSEL, 421	VSSL	
AC-	EOF-AC-	AIR CONDITIONER, UPSTAIRS OFFICES	AC	
AC-2	EOF-AC-2	AIRE CONDITION, PROD. OFFICE	AC	
BL-OO	EOF-BL-OO	BLOWER, FRESH AIR, LAB	BLW	
CR-201	EOF-CR-201	BRIDGE CRANE, K-201	CRANE	
CR-DOCK	EOF-CR-DOCK	CRANE, LOADING DOCK JIB	CRANE	
CR-PIER	EOF-CR-PIER	ELLPIER, HOIST/CRANE FACILITIES	CRANE	
GEN-SB	EOF-GEN-SB	GENERATOR,STANDBY	GEN	
P-232	EOF-P-232	PUMP, PRE-LUBE, K-205	PUMP	
P-233	EOF-P-233	PUMP, SEPTIC, BUILDING	PUMP	
P-234	EOF-P-234	PUMP, SEPTIC, FIELD	PUMP	
P-ARO-1	EOF-P-ARO-1	PUMP, DIAPHRAGM, 1 1/2", SS	PUMP	
P-ARO-2	EOF-P-ARO-2	PUMP, DIAPHRAGM, 1/2", SS	PUMP	
P-M15-1	EOF-P-M15-1	PUMP, DIAPHRAGM, 3", SS	PUMP	
P-M15-2	EOF-P-M15-2	PUMP, DIAPHRAGM, 3", ALUM, TK-1903, SPARE	PUMP	
P-M15-3	EOF-P-M15-3	PUMP, DIAPHRAGM, 3", ALUM, BACKUP, TK-1903, SPARE	PUMP	
P-M4-1	EOF-P-M4-1	PIJMP, DIAPHRAGM, 1 1/4"	PUMP	
P-P2R-1	EOF-P-P2R-1	PUMP, DIAPHRAGM, 1", PLASTIC	PUMP	
P-SP5-1	EOF-P-SP5-1	PUMP, DIAPHRAGM, 3", TYPE5	PUMP	
P-SPA-1	EOF-P-SPA-1	PUMP, DIAPHRAGM, 2", TYPE A	PUMP	
TK-3104	EOF-TK-3104	TANK, DIESEL, FOR HOLLY CHEMICAL	TNK	
TK-EAGLE	EOF-TK-EAGLE	TANK, WATER, PIER FEED FROM EAGLE CYN	TNK	
TRAN-1	EOF-TRAN-1	TRANSFORMER 1, 12470V TO 4160V, K-201	TX	
TRAN-2	EOF-TRAN-2	TRANSFORMER 2, 12470V TO 4160V	TX	
TRAN-3	EOF-TRAN-3	TRANSFORMER 3, 12470V TO 480V	TX	
TRAN-4	EOF-TRAN-4	TRANSFORMER 4, 12470V TO 4160V	TX	
TRAN-5	EOF-TRAN-5	TRANSFORMER 5, 12470V TO 480V	TX	
TRAN-6	EOF-TRAN-6	TRANSFORMER 6, 12470V TO 16500V	TX	

APPENDIX E – INTERACT RELOCATION REPORT

Venoco Ellwood Onshore Facility (EOF) Relocation Alternatives and Costs

March 2015

Prepared by: InterAct
4567 Telephone Rd.
Suite 203
Ventura, CA 93003
805-658-5600
www.interactprojects.com

Prepared for:
Venoco Inc.
6267 Carpinteria Ave.
Suite 100
Carpinteria, CA 93013

CONTENTS

1.0 EXECUTIVE SUMMARY 1
2.0 PROJECT BACKGROUND 4
2.1 PLATFORM HOLLY 5
2.2 ELLWOOD ONSHORE FACILITY (EOF) 6
2.3 PIPELINE INFRASTRUCTURE 7
2.4 LAS FLORES CANYON (LFC) FACILITIES 8
3.0 SCENARIOS 10
3.1 SCENARIO 1 – Dry Oil to LFC via Existing Onshore Line, All Water and Gas Re-Injected at Platform Holly 10
3.2 SCENARIO 2 – Dry Oil to LFC via Existing Onshore Line, Gas to LFC via New Onshore Line 12
3.3 SCENARIO 3 – Dry Oil to LFC via Existing Onshore Line, Gas to LFC via New Offshore Line 12
3.4 SCENARIO 4 – Dry Oil and Gas to LFC via New Offshore Lines 12
4.0 FINDINGS 13
4.1 Simplified Scenario Block Diagrams 13
4.2 Identified Facility Changes 18
4.2.1 Scenario 1: Current Production, Dry Oil to LFC via Existing Onshore Line, All Water and Gas Re-Injected 18
4.2.2 Scenario 2: Current Production, Dry Oil to LFC via Existing Onshore Line, Gas to LFC via New Onshore Line 20
4.2.3 Scenario 3: Current Production, Dry Oil to LFC via Existing Onshore Line, Gas to LFC via New Offshore Line 21
4.2.4 Scenario 4: Current Production, Dry Oil and Gas to LFC via New Offshore Lines 21
4.3 Cost Summary 22
5.0 CONCLUSIONS 24

APPENDIX A – VENOCO EOF RELOCATION SCENARIOS AND ORDER OF MAGNITUDE COST ESTIMATES

APPENDIX B – FERC PIPELINE COST DATA

1.0 EXECUTIVE SUMMARY

Venoco's Ellwood Onshore Facility (EOF) processes oil, gas, and water produced from Platform Holly. The EOF is located in the City of Goleta and operates as a legal, non-conforming use. When first installed, the EOF was a permitted use with an industrial zoning designation; however in 1990, the County of Santa Barbara rezoned the property to recreation, making the facility a legal non-conforming use. The EOF is flanked by a golf course to the East, a resort hotel to the West, and the Pacific Ocean to the south. The City of Goleta (City) desires the EOF to be relocated. However, the EOF is necessary for Venoco's associated Platform Holly production processing. This high level report was commissioned to investigate the possible alternatives for relocating Venoco's facility and the associated costs with implementing such a relocation.

Various alternatives were screened for this report; screening criteria included technical feasibility, practicality, and cost. The best options were determined to be those that included transportation of Platform Holly production to the County's designated south coast consolidated processing site at Las Flores Canyon (LFC). The facilities in LFC are owned and operated by ExxonMobil (XOM). Four separate scenarios were devised to present logical, lowest cost options for EOF re-location. An order of magnitude cost was estimated for each scenario.

All scenarios assume that a full gas processing plant cannot be built on Platform Holly due to its limited size and structural capacity.

All scenarios assume that the electrical substation, gas source line, some buried lines with associated cathodic protection and pigging equipment remain in place at the EOF location to provide sales quality gas, pipeline protection, and electricity to the platform. All other above ground equipment at the EOF facility is assumed to be removed for all scenarios. The estimated cost for the EOF above ground facilities removal is covered in a separate document and is not included in the cost estimates below and throughout this document.

This report did not investigate the environmental implications or impacts associated with the abandonment and relocation of the EOF. This report does not include permit or right-of-way acquisition feasibility. Nor does it include an evaluation of the economic impact that any re-location scenario would have on Venoco or its lessors. These items were beyond the scope of this report.

Conclusions for this report are listed in Section 5.

Below is a brief description of each scenario and an order of magnitude cost estimate for each. The four scenarios are further described in Section 3.0 with simplified block diagrams in Section 4.1. Additional information regarding the basis for the cost estimates is described in Section 4.2 and in Appendix A.

- **Scenario 1** would use the existing crude oil emulsion pipeline from the platform to the EOF; the line would be tied directly into the existing oil sales pipeline (Line 96) that extends approximately 9 miles westward to its tie-in point near LFC. Line 96 would be re-routed from its current sales point at the Tautrim property into LFC approximately 1.3 miles to a new oil receiving station. The new oil receiving station and tankage would be built in LFC.

The order of magnitude cost for this scenario would be approximately $45 million. Without the use of the EOF in this scenario, the hydrogen sulfide (H_2S) levels in Line 96 would be higher than current levels due to the limited offshore processing capability. The water currently processed at the EOF would be re-injected offshore.

Produced gas would also be re-injected offshore. Re-injection of the produced gas would force premature cessation of production for Platform Holly due to the limited capacity of the permitted gas injection zone. It is estimated that the gas injection zone would be at full capacity in less than five years if all produced gas were re-injected. Since all gas would be injected, Venoco and its lessors would lose all revenue currently being obtained by the sale of gas and associated gas byproducts (Natural Gas Liquids (NGL's) and Liquefied Petroleum Gas (LPG)) at the EOF. Since the gas injection zone would be at capacity in less than five years, Venoco and its lessors would also lose all revenue from oil sales after five years. Finally, the cost of platform abandonment would be greatly accelerated in Scenario 1 due to the premature cessation of production. This is the only scenario which considered re-injection of all produced gas.

- **Scenario 2** is the same as Scenario 1 except for the handling of produced gas. In this scenario, an onshore gas pipeline would be built to bring produced gas from Platform Holly to LFC. A gas processing plant would be built at LFC so that gas could be processed and sold. The order of magnitude cost of this scenario would be $109 million. Without the use of the EOF in this scenario, the H_2S levels in the newly built gas line would be high due to limited offshore processing capability. Right of Way (ROW) agreements would be required for the new gas line; it is anticipated that it could be very difficult to obtain such agreements from current landowners as this would not be a common carrier pipeline.
- **Scenario 3** is the same as Scenario 2 except that the pipeline to bring produced gas from the platform to LFC would be constructed offshore. The order of magnitude cost of this scenario is $166 million. There are no local marine vessels that could lay such a line, so this cost includes mobilizing a vessel from out of state, or possibly out of country, depending on market conditions and vessel availability at the time of installation. Construction of such an offshore pipeline would have impacts on the marine environment, which would need to be examined. This scenario would relocate the majority of the unprocessed gas pipeline transfer route to LFC from onshore to offshore.
- **Scenario 4** is the same as Scenario 3 except that the existing Line 96 would be abandoned and both oil and gas would be transported to LFC via offshore pipelines. The order of magnitude cost of this scenario is $233 million. It is anticipated that cargo barges (with associated equipment), in addition to a pipe lay vessel, would be required to bring the required 20 miles of pipeline into California. This scenario would relocate the majority of both the unprocessed gas and oil pipeline transfer route to LFC from onshore to offshore.

There are many factors that can vary widely when determining the cost for each scenario. For instance, costs for permitting were included, but costs for mitigation measures that may be required to obtain the permit were not included. Such mitigation costs could increase permitting

costs significantly. The cost of removing the above ground facilities at the EOF is substantial, but is not included in any of the above numbers; a separate report will address these costs. All scenarios will incur increased abandonment and decommissioning costs to Venoco as all scenarios require new wells and facilities. None of these additional costs were estimated or are included in this report. The operating costs at LFC will be higher than those at EOF as XOM would have joint fees for shared roads, security, pipe rack, and common operating systems. These costs were not quantified for this report.

The order of magnitude costs are based on available previous studies and recently executed onshore and offshore pipeline construction projects in California (escalated to present day dollars), prior work performed by InterAct, vendor input where available, and estimates as available from Venoco. These estimates are adjusted to December 31, 2014. It is important to note that actual costs will be higher as construction of any scenario cannot occur immediately due to engineering, permitting, and lead time required for such construction.

There is a possibility that none of the four scenarios would be feasible due to environmental impacts and permitting issues. Permitting feasibility was not investigated in this report.

2.0 PROJECT BACKGROUND

Venoco Inc. (Venoco) produces oil and gas from the South Ellwood Field on Platform Holly. The platform is located off the coast of Goleta, California in State Waters. The Ellwood Onshore Facility (EOF) supports the processing of Platform Holly oil, water and gas production, and provides for the sale of Platform Holly's oil and gas to market. The gas is sold to Southern California Gas (SCG) via a sales gas line located at the EOF facility. The oil is shipped through a recently installed dry oil sales pipeline (Line 96) that carries the oil from a tie in point at the EOF through an approximately 9 mile onshore pipeline to the Plains All American Pipeline Limited Partnership (PAAPLP) with a tie in point about 1 mile Northwest of Las Flores Canyon Gate on the Tautrim property. The EOF also provides natural gas to the platform. Offshore electrical power is provided from the Southern California Edison (SCE) substation which is co-located at the EOF site.

Figure 2-1: EOF Site Aerial

The EOF is located in what was originally the unincorporated area of Santa Barbara County. In 1990, the County re-zoned the site from an industrial use to recreation, making the EOF a legal non-conforming use. With this designation, the facility is allowed to remain in place, but the use and structure are prohibited from being enlarged, expanded, or extended beyond normal repair and maintenance. Improvements that result in minor enlargement, extension, expansion or structural alterations are allowed in circumstances that meet the City's Coastal Zoning Ordinance Limited Exception Determination findings (Section 35-305, subpart 7b) for demonstrable public health and safety or environmental benefit.

ExxonMobil's onshore facilities, located in Las Flores Canyon (LFC) approximately 10 miles northwest of Goleta, have been designated as the consolidated processing site for future oil and gas development on the south coast of Santa Barbara County.

In 2002, the City of Goleta incorporated. The EOF is now within the jurisdictional limits of the City. The City is now looking to initiate the termination of the EOF as a legal non-conforming use.

InterAct was retained by Venoco to perform a high level analysis, including review of past studies, for possible alternatives wherein Platform Holly production is processed and sold without the use of the EOF. After screening such alternatives for cost, practicality, and technical feasibility, InterAct devised four scenarios and estimated order of magnitude cost for each scenario. The four scenarios explore potential re-location and/or removal of pipelines and facilities at Platform Holly, at the EOF, and at LFC. No other production streams or facilities were considered in this report.

This report is conceptual in nature and is intended to consider feasibility and certain identified aspects for the scenarios described in section 3.0. Since there are numerous evolving factors, constraints, and assumptions for each of these scenarios, the content is based upon a high level review of historical documentation with key benchmark updates as indicated throughout the report.

2.1 PLATFORM HOLLY

Platform Holly is an offshore production platform installed in 1966 by ARCO. It is located in the Santa Barbara channel, approximately 2 miles offshore from Goleta, and sits in 211 feet of water. The facility produces from the State Oil and Gas leases PRC 3120 and 3242, which are part of the South Ellwood Oil Field. Platform Holly currently produces approximately 3,700 BOPD, 19,000 BWPD, and 3,200 MSCFD of gas production.

Platform Holly emulsion (comprised of 3700 BOPD and 3000 BWPD) is sent through a 6" offshore emulsion line to the EOF for processing. Platform Holly gas (3200 MCFD) is sent through a 6" offshore gas line to the EOF for processing. These pipelines are thoroughly maintained and regularly inspected; they are pigged as needed and "Smart" pigged annually.

Gas is sent from the EOF to Platform Holly via a 4" utility line for the required safe operation of the platform flare pilot and offshore rig generators. This 4" pipeline is pigged and hydrostatically pressure tested annually. All three pipelines are also externally inspected annually via a Remote Operated Vehicle (ROV).

Table 2-1.Platform Holly Capacities

	Rated Capacity JAN 2015	Current Usage JAN 2015	Available Capacity JAN 2015
Oil/Water Separator	40,000 BFPD	22,900 BFPD	17,100 BFPD
Wet Oil	20,000 BFPD	6,900 BFPD	13,100 BFPD
Dry Oil	10,000 BOPD	3,700 BOPD	6,300 BOPD
Water injection pump	16,000 BWPD	16,000 BWPD	-0-
Water Injection wells	16,000 BWPD	16,000 BWPD	-0-
Sour Gas to EOF	13,000 MSCFD	3,200 MCFD	9,800 MCFD

Notes

1) Platform Holly oil, water, and gas production is sour (contains carbon dioxide (CO_2) and hydrogen sulfide (H_2S)) with partial offshore separation and gas treatment systems to remove water (dehydrate) from the production gas prior to being sent to the EOF for further processing.
2) Wet oil emulsion permit limit from Platform Holly to the EOF is 20,000 BFPD.
3) Dry oil permit limit from Air Pollution Control District (APCD) is 13,000 BOPD; Santa Barbara County Ordinance 2919 allows for 20,000 BOPD (Phase III, Condition 30).
4) Offshore shipping pump to ship emulsion to the EOF is rated for 20,000 BFPD
5) Gas compressor capacity for gas injection is 5,000 MSCFD
6) Gas compressor capacity to ship gas to the EOF is 13,000 MSCFD

2.2 ELLWOOD ONSHORE FACILITY (EOF)

The EOF was built in 1966, and was started up as currently configured in 1982, to receive and process oil-water emulsion and gas production from Platform Holly. The EOF is located between Santa Barbara's Sandpiper Golf Course (developed in 1972) and the Bacara Resort (built in 2000). The EOF currently processes approximately 3,200 MSCFD of natural gas (1,200 MSCFD which is sold as gas and 200 BPD which is sold as gas liquids), 3,700 BOPD, and 3,000 BWPD.

The emulsion and gas are processed at the EOF before being transferred to the oil and gas sales lines. The gas is sold to SCG through a sales line at the EOF location. The oil goes through a Lease Automatic Custody Transfer (LACT) unit at the EOF location before shipment through Venoco's approximately 9 mile dry oil pipeline (Line 96) to the PAAPLP tie-in location at Tautrim, which is approximately 0.7 miles northwest of the LFC entrance. The oil is heated prior to being shipped through the LACT to bring it to the PAAPLP temperature spec of at least 130° F.

The waste water from the EOF is injected into the EOF onshore water injection well, WWD1.

Table 2-2. EOF Capacities

	Rated Capacity JAN 2015	Current Usage JAN 2015	Available Capacity JAN 2015
Oil Treating	13,000 BOPD	3,700 BOPD	9,300 BOPD
Water Treating	10,000 BWPD	3,000 BWPD	7,000 BWPD
Gas Treating	13,000 MSCFD	3,200 MSCFD	9,800 MSCFD
LPG/NGL	820 BPD	200 BPD	620 BPD
Gas Sales	8,000 MSCFD	1,200 MSCFD	6,800 MSCFD

Notes

1) The EOF receives emulsion (3700 BOPD with 3000 BWPD) and sour gas (3200 MCFD with CO_2 and H_2S content) both of which are further processed (separated and treated) into sales quality oil and sales quality gas, along with saleable byproducts (e.g., LPG/NGL, elemental sulfur). The sales gas is sold to SCG through an SCG sales line located at the EOF.
2) SCE has a substation at the EOF to provide power to Platform Holly and the EOF. The substation was installed in 1999 to provide more reliable and efficient power from a higher voltage 66.5 KV power source and is currently a conforming use co-located at the EOF.
3) Venoco has transformers and switchgear located at the EOF which converts substation power to usable power for the EOF and transmission through a power cable to Platform Holly.
4) Dry oil (less than 3% BS&W) is delivered through the LACT to Line 96. This LACT is also part of Line 96's leak detection system. There is a heater upstream of the LACT to ensure the oil is at the required 130°F before being measured.
5) Line 96 and other associated pipelines have cathodic protection, leak detection and pigging equipment installed at or near the EOF.

2.3 PIPELINE INFRASTRUCTURE

There are three pipelines between Platform Holly and the EOF: a) 6" emulsion line carrying 3700 BOPD wet oil with about 3000 BWPD, b) 6" gas pipeline carrying 3200 MSCFD produced gas, and c) 4" utility line to provide sales quality gas from the EOF to the platform for the required safe operation of the platform flare pilot and offshore rig generators.

The 6" lines are pigged regularly and inspected using smart pigs annually using equipment at Platform Holly and at the EOF. The 4" line is pigged and hydrostatically pressure tested annually. All three pipelines are also externally inspected annually via a Remote Operated Vehicle (ROV).

Line 96 was installed in 2012 to transport dry oil from the LACT at the EOF to the PAAPLP tie-in point at Tautrim. This line is pigged regularly and SMART pigged on a five-year schedule using equipment located near the EOF and at the Tautrim tie-in point. Equipment for leak detection is also located at the EOF, along the pipeline and at the Tautrim tie-in point.

2.4 LAS FLORES CANYON (LFC) FACILITIES

The Las Flores Canyon facilities are owned and operated by ExxonMobil (XOM). The LFC entrance is located approximately 8 miles northwest of the City of Goleta on the north side of the U.S. Highway 101. LFC facilities receive oil and gas from Platforms Hondo, Harmony and Heritage. Produced natural gas is split into two streams. Gas sent to the POPCO gas plant is sold. Gas sent to the Sour Gas Treating Plant (SGTP) is used to generate electricity and steam for XOM's use at LFC. The processed crude oil is sold and pumped into the PAAPLP pipeline at LFC.

Venoco and InterAct met with XOM to discuss rated capacity, current usage, and available capacities on January 27, 2015. XOM provided the information as shown in Table 2-3; however they outlined several planned changes which will have significant effects on capacity in the near future (see notes below).

Table 2-3. LFC Capacities

	Rated Capacity JAN 2015	Current Usage JAN 2015	Available Capacity JAN 2015
Oil Treating	100,000 BOPD	30,000 BOPD	70,000 BOPD
Water Treating	65,000 BWPD	65,000 BWPD	-0-
Fresh Water			-0-
Gas Treating Total	90,000 MSCFD	50,000 MSCFD	40,000 MSCFD
POPCO	80,000 MSCFD	40,000 MSCFD	40,000 MSCFD
SGTP	10,000 MSCFD	10,000 MSCFD	0

Notes

1) Venoco sour production has higher CO_2 and H_2S content than XOM's production, which will reduce listed rated capacities that are based upon XOM production fluids' composition.
2) XOM's offshore fields are at a point in reservoir development where pressure maintenance is required. Thus, XOM is planning to idle the POPCO gas treatment plant and switch over to full gas injection offshore by 2018. The maximum turn down throughput for the plant is 25,000 MSCFD (minimum flow rate), which is far above Venoco's current 3,200 MSCFD production.
3) XOM plans to install enough compression capacity offshore to inject all the gas currently being processed at POPCO in 2018. Gas will continue to be shipped to shore to keep the Sour Gas Treatment Plant (SGTP) at full capacity (10,000 MSCFD) for use as fuel for the XOM cogeneration power plant. XOM stated they will not have any gas capacity after 2018 as the POPCO plant will be idled and the SGTP will be at full capacity.
4) XOM has spare capacity in their Vapor Recovery Unit (VRU) and flare systems at LFC to accommodate a collocated Venoco plant.
5) There is excess power available from the SCE substation at LFC, but capacity and usage is not known.

6) XOM does not have any fresh water capacity to provide fire water or water for boilers, heat exchangers, and other processing equipment. XOM is agreeable to allow the drilling of a fresh water source well on their property as long as it does not interfere with their allocated fresh water usage. The fresh water deliverability of such a well is unknown.

7) XOM does not have any produced water handling capacity. Its produced water is processed to municipal waste water quality and shipped offshore and disposed of under their NPDES permit. The disposal point is through a diffuser 900' below the surface of the ocean, at one of XOM's platforms. The surface facilities for water handling are at capacity, and XOM's NPDES permit would not allow for Platform Holly's produced (state) water to be co-mingled with their produced (federal) water regardless of capacity.

3.0 SCENARIOS

The four scenarios considered for Platform Holly's production processing and sale without the use of the EOF are described below. The current Platform Holly production levels for the four scenarios are 3,700 BOPD, 19,000 BWPD, and 3,200 MSCFD. For reference, a map showing the existing Platform Holly, the EOF, Line 96, PAAPLP Line 96 tie-in, Las Flores Canyon (LFC), and the potential new subsea pipeline route based on historical studies is provided in Figure 3-1.

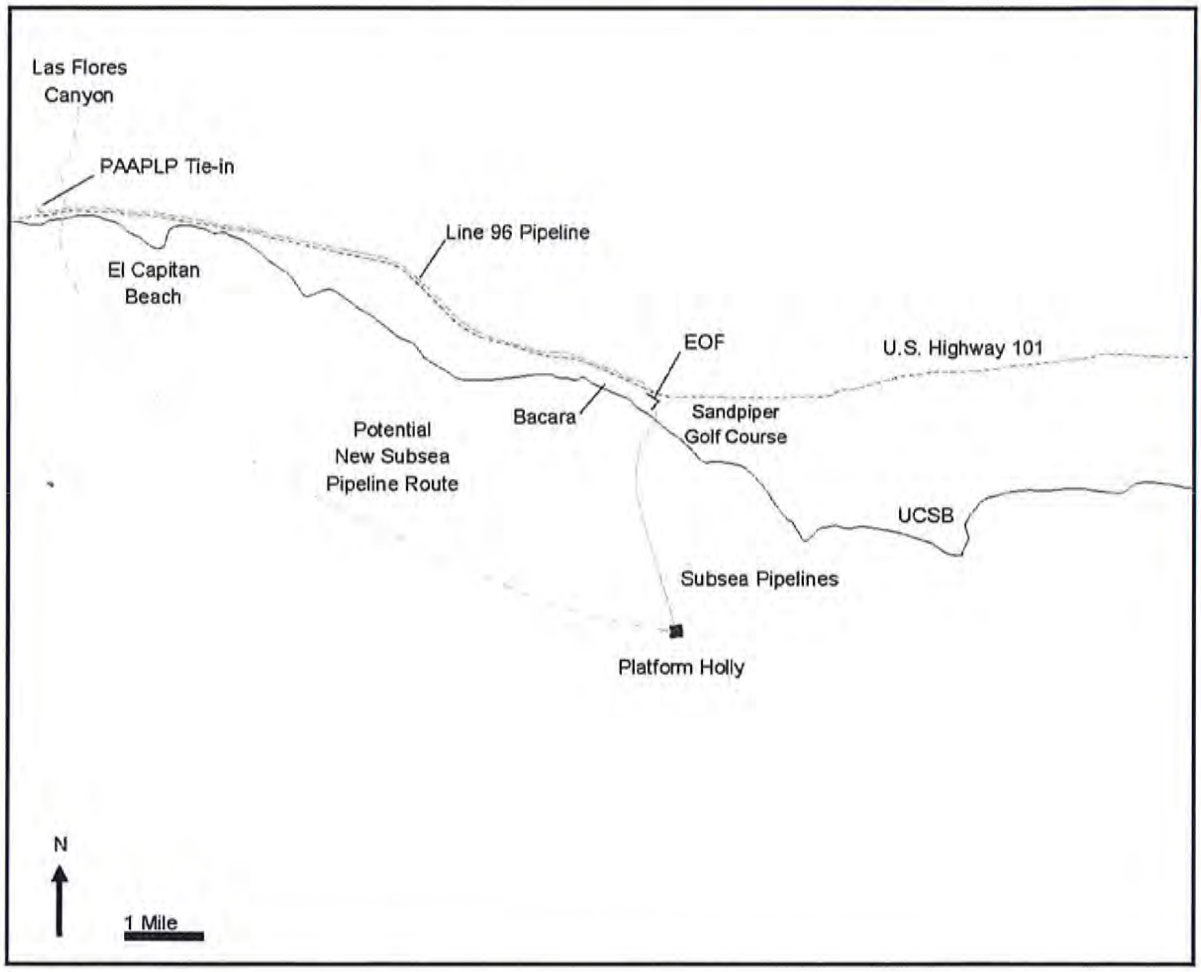

Figure 3-1: Facility Locations with Pipeline Routes

3.1 SCENARIO 1 – Dry Oil to LFC via Existing Onshore Line, All Water and Gas Re-Injected at Platform Holly

Concept: Produced oil would be separated from gas and water offshore, and dry oil would leave the platform. All water would be injected offshore, and the current onshore disposal well would be abandoned. Waste water from LFC would be trucked out to an approved disposal facility. All gas

and associated saleable byproducts would be injected into the Rincon zone rather than sold. Note that the Rincon zone has limited capacity for gas injection.

The dry oil would travel to LFC via 1) the existing 6" offshore emulsion line from Platform Holly to the EOF location, 2) through a to-be-constructed tie-in point at the EOF to the existing oil sales Line 96, 3) through existing Line 96 to 4) a to-be-constructed tie-in point at the entrance to LFC to 5) a to-be-constructed pipeline to LFC pad to be purchased by Venoco. A dry oil receiving station would be constructed at the LFC pad.

The dry oil receiving station would include two 10,000 bbl tanks: 1) clean oil heated tank to keep oil at 130°F, 2) heated reject tank for upset conditions and to allow for waste water to be trucked out of LFC. The tanks and process equipment would be tied into XOM's existing VRU/flare system. The power for the receiving station would be supplied by the existing SCE power station at LFC. A fresh water supply well would be drilled to supply water for the facility and for fire protection. A fire water system would be installed at the new LFC dry oil receiving station. The approximate 0.7 miles of Line 96 from LFC entrance to Tautrim tie-in point to the PAAPLP pipeline would be abandoned in place and the associated equipment removed.

Chemicals and heat would be added to the dry oil on the platform to prevent asphaltene break out in the pipeline from the platform to LFC. Pigging and leak detection equipment would be installed on Platform Holly and at LFC. Some cathodic protection equipment would be kept at the EOF for pipeline protection. Under this scenario, the oil H_2S content in the sales line would increase significantly due to the limited processing capability offshore.

There is no deck space or structural capacity on Platform Holly to construct a full offshore gas processing plant. The untreated gas would be injected into the Rincon zone, which is currently permitted for gas injection, but has limited capacity.

Equipment must periodically be shut down for maintenance and/or repair. During these shutdowns, and without the ability to rely on EOF for gas handling, produced gas would have to be flared. In order to flare gas for these short events, a triazine tower must be constructed on the platform to remove its H_2S content. Current deck space is not sufficient on the platform, and an extension of deck space would be constructed for this equipment.

Produced water would be injected offshore. The offshore injection wells currently take 16,000 BWPD; water is injected into the Monterey zone, which is currently permitted for water injection. The onshore EOF well WWD1 takes the remaining produced water. Under all scenarios InterAct has assumed that the onshore EOF well WWD1 would be abandoned, and an additional well would be drilled offshore to take the excess produced water. The injection pumps on Platform Holly would be upgraded or replaced because the existing pumps are at capacity. One new injection well and an upgraded Platform Holly water injection pump are included in the cost estimate.

SCE currently provides power to Platform Holly through its substation co-located at the EOF via Venoco's switchgear, transformers, and power cable to the platform. Under all scenarios, the SCE substation would remain and be modified so as to allow removal of Venoco's transformers and switchgear. The SCE substation would provide power directly to Venoco's existing power cable to the platform. The substation is owned by SCE and is a conforming use.

SCG has a 1000 psi gas line at the EOF which supplies gas to the EOF and Platform Holly. Under all scenarios, the SCG line would remain and be modified so as to allow tie-in direct to Venoco's existing 4" utility line from the EOF to Platform Holly.

3.2 SCENARIO 2 – Dry Oil to LFC via Existing Onshore Line, Gas to LFC via New Onshore Line

Concept: Same as Scenario 1 except that the produced gas would be shipped to LFC via a to-be-constructed **onshore** gas pipeline into a to-be-constructed LFC gas processing plant at a pad to be purchased from XOM and co-located with the new LFC dry oil receiving station.

The gas would travel to LFC via 1) the existing 6" gas line from Platform Holly to the EOF location, 2) through a to-be-constructed tie-in point at EOF, 3) through the new to-be-constructed onshore gas line to 4) a to-be-constructed tie-in point at the entrance to LFC to 5) a to-be-constructed pipeline to the LFC pad to be purchased by Venoco. A gas processing plant would be constructed at the LFC pad. Additional acreage at the pad would be purchased from XOM and co-located with the new LFC dry oil receiving station. The new onshore gas line between the EOF and LFC would follow the same path as Line 96.

Based on discussion with XOM, there is currently capacity at the POPCO gas plant at LFC, but XOM plans to idle the plant in 2018 and re-inject all their produced gas back into the formation for pressure maintenance. Once XOM stops its flow of gas to POPCO, the plant will be idled unless there is at least 25,000 MCFD throughput to keep it online. Venoco's production of 3,200 MCFD is far below the minimum throughput for the POPCO plant. Thus, this scenario includes the construction of a new gas processing plant at LFC.

The new gas plant would include construction of NGL/LPG tankage. Some of the NGL/LPG's would be injected into the oil sales line (150 BPD) and some would be sent to XOM (50 BPD) at their Sour Gas Treating Plant (SGTP). A tie-in point from the new gas plant to the existing SCG sales pipeline at LFC would be constructed.

3.3 SCENARIO 3 – Dry Oil to LFC via Existing Onshore Line, Gas to LFC via New Offshore Line

Concept: Same as Scenario 2 except that the produced gas would be shipped to LFC via a to-be-constructed **offshore** pipeline into the to-be-constructed LFC gas processing plant.

The offshore gas pipeline would use XOM's 9 ft diameter tunnel for crossing the railroad and U.S. Highway 101 if there is room or Horizontal Directional Drill (HDD) if there is not adequate space available.

3.4 SCENARIO 4 – Dry Oil and Gas to LFC via New Offshore Lines

Concept: Same as Scenario 3 except that both dry oil and gas would be shipped to LFC via to-be-constructed offshore pipelines.

4.0 FINDINGS

The scenarios described in section 3.0 were evaluated. The findings section 4.0 has been broken out into: 4.1) Simplified Block Diagrams 4.2) Identified Facility Changes and 4.3) Cost Summaries.

4.1 Simplified Scenario Block Diagrams

Simplified block diagrams showing general path, routing, and approximate rates for the four scenarios listed in section 3.0 are provided below.

Venoco – Ellwood Onshore Facility (EOF) Relocation Alternatives and Costs

Scenario 1 (Current Production, Dry Oil to LFC via Existing Onshore Line, Water and Gas Injected)

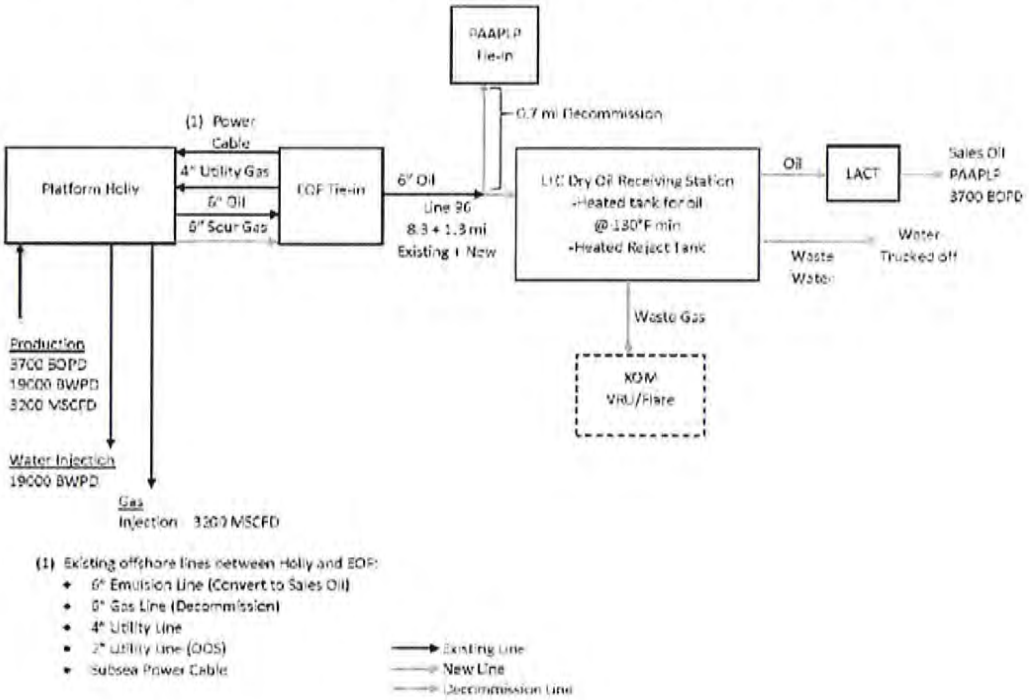

(1) Existing offshore lines between Holly and EOF:

- 6" Emulsion Line (Convert to Sales Oil)
- 8" Gas Line (Decommission)
- 4" Utility Line
- 2" Utility Line (OOS)
- Subsea Power Cable

Existing Line
New Line
Decommission Line

Venoco – Ellwood Onshore Facility (EOF) Relocation Alternatives and Costs

Scenario 2 (Current Production, Dry Oil to LFC via Existing Onshore Line, Sour Gas to LFC via New Onshore Line)

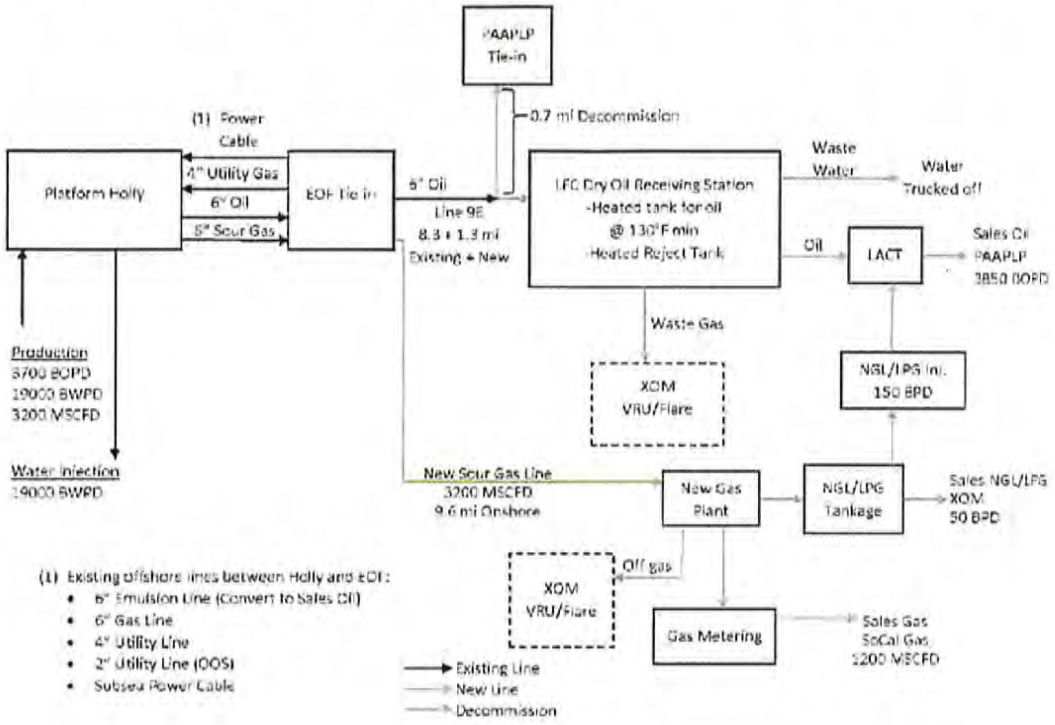

Venoco – Ellwood Onshore Facility (EOF) Relocation Alternatives and Costs

Scenario 3 (Current Production, Dry Oil to LFC via Existing Onshore Line, Sour Gas to LFC via New Offshore Line)

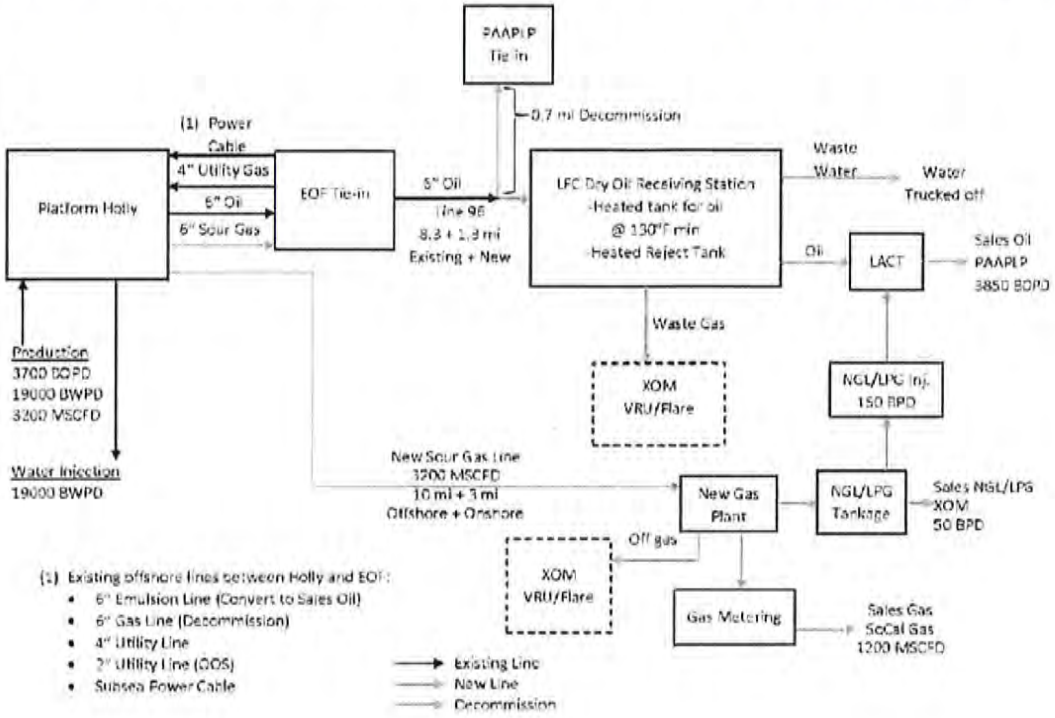

Venoco – Ellwood Onshore Facility (EOF) Relocation Alternatives and Costs

Scenario 4 (Current Production, Dry Oil and Sour Gas to LFC via New Offshore Lines)

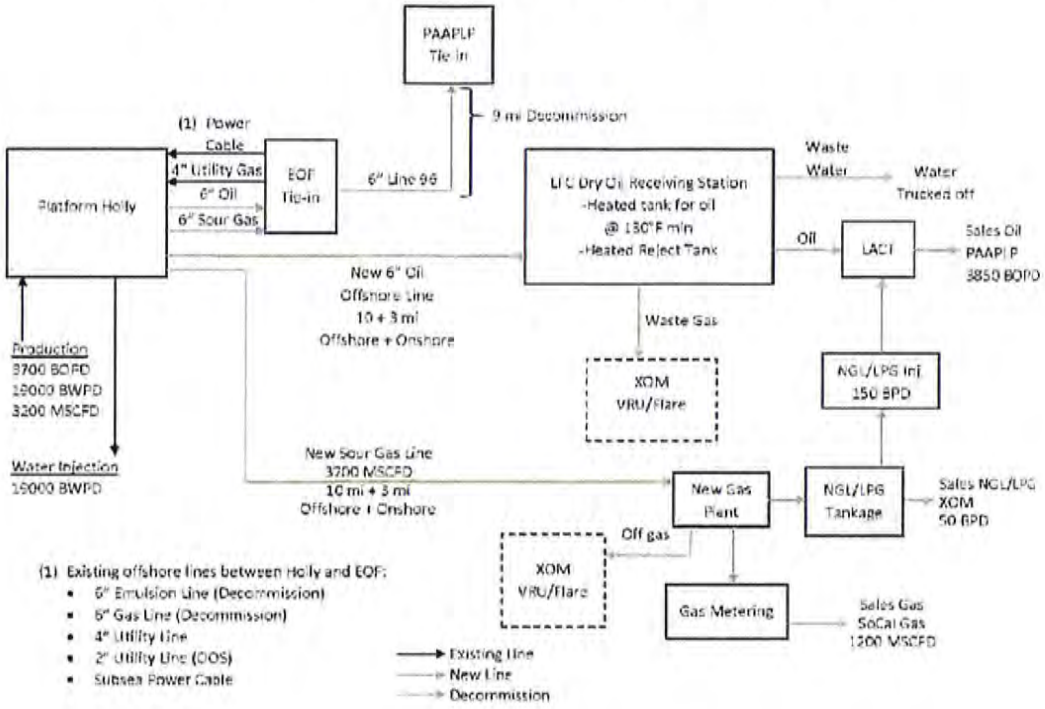

4.2 Identified Facility Changes

The identified facility changes for the three scenarios listed in section 3.0 are summarized below.

4.2.1 Scenario 1: Current Production, Dry Oil to LFC via Existing Onshore Line, All Water and Gas Re-Injected

1. Production separation facilities, gas and water facilities on Platform Holly.
    a. Production separation facilities for oil and water are adequate.
    b. Gas facilities are limited. There is minimal capability to remove NGL/LPG's, H_2S, or CO_2 offshore. Full gas processing facilities cannot be built offshore due to platform deck space and structural capacity limitations as well as available power on the platform. However, in the absence of the EOF, a small deck extension and some gas handling equipment would have to be constructed on the platform to sweeten gas prior to flaring during maintenance and repair operations.
    c. Offshore injection pumps would be upgraded or replaced to inject the full 19,000 BWPD produced water.
2. Gas and water injection wells on Platform Holly.
    a. The two existing gas injection wells are adequate for injection of the 3200 MSCFD produced gas. However, the untreated gas will be injected into the permitted Rincon zone which has limited capacity, causing premature cessation of production at Platform Holly. Venoco investigated the use of other zones for gas injection, none of which were found suitable for storage of this untreated gas. At forecasted gas production rates, the Rincon zone would be at capacity in less than 5 years.
    b. An existing well on the platform would be re-drilled for water injection into the Monterey formation to replace the existing onshore EOF WWD1 well.
    c. The EOF WWD1 well would be abandoned.
3. A new flowmeter with cut monitor would be installed on Platform Holly for leak detection in the pipelines to replace the equipment currently at the EOF.
4. Existing pipeline monitoring (Supervisory Control and Data Acquisition - SCADA) and telemetry equipment at the EOF for data collection of pipeline monitoring variables as well as control of pipeline would be moved to LFC.
5. Some equipment would be needed at the EOF to service Platform Holly and provide line protection.
    a. SCG valves, instrumentation, pressure control and regulator would be installed and tie-in point constructed to allow for shipping clean gas to Platform Holly for safe operation of the offshore flare pilot and rig generators. The existing 4" utility

line would be used to deliver sales quality gas to the platform. The existing 4" utility line pig receiving station would remain at the EOF to accommodate pigging required with the annual hydrotesting of this line.

b. The SCE substation would remain at the EOF to power Platform Holly's subsea power cable. The substation is not anticipated to be removed in any case; it is owned by SCE, not Venoco, and is a conforming use. The SCE substation would be modified to allow removal of Venoco's switchgear and transformers to provide power directly to the existing subsea power cable to Platform Holly.

6. A tie-in point would be constructed from the offshore 6" emulsion line to the existing sales oil Line 96 at the EOF. The current 6" offshore emulsion line would be converted to a dry oil sales line. Chemicals and heat would be needed at Platform Holly to minimize asphaltene precipitation. Currently, the heat from the water in the emulsion heats the oil in this line. H_2S levels in Line 96 are currently 5-10 ppm. Levels will increase without the processing capability at the EOF.
7. Pigging and leak detection equipment for subsea and onshore pipelines from Platform Holly to LFC would be installed on Platform Holly and at LFC to replace aboveground equipment currently located at the EOF. Some cathodic protection equipment for pipeline protection and pigging equipment for the 4" utility line would remain in place.
8. A tie-in point would be constructed from existing Line 96 to a to-be-constructed pipeline at the entrance to LFC to get the dry oil to the to-be-constructed dry oil receiving station.
9. The approximate 0.7 mile portion of existing Line 96 located northwest of LFC entrance would be abandoned in place. Associated surface equipment at the PAAPLP tie-in point located at Tautrim would be removed.
10. A 1.3 mile new onshore pipeline would be constructed from the tie-in point at the entrance of LFC to the to-be-constructed dry oil receiving station at LFC. The pipeline from the entrance to LFC to the dry oil receiving station would use XOM's existing pipeline routing which includes buried lines and an elevated pipe rack.
11. The dry oil receiving station would be constructed on XOM owned land.
12. The dry oil receiving station would consist of two heated 10,000 BBL tanks, a check meter for leak detection, pigging equipment for the full pipeline from Platform Holly to LFC, and a LACT unit. Both tanks would be heated to at least 130°F for pipeline quality oil upstream

of the LACT and to help break out water in the reject tank. The LACT would be tied into the PAAPLP pipeline at LFC.

13. The waster water from the dry oil receiving station would be trucked out of LFC to an approved liquids disposal site.
14. Both tanks and processing equipment would be hooked up to XOM's VRU/flare system.
15. The dry oil receiving station would be powered by the LFC SCE substation; LFC SCG would provide clean gas for station operations.
16. A fresh water supply well would be drilled for the processing facilities and fire protection. A fire water system would be installed.
17. A new control room would be located at the LFC new dry oil receiving station.
18. The existing 6" gas pipeline from Holly to EOF would be decommissioned; the cost for such decommissioning is not included in the cost estimate.

4.2.2 Scenario 2: Current Production, Dry Oil to LFC via Existing Onshore Line, Gas to LFC via New Onshore Line

1. Scenario 2 facility changes are the same as Scenario 1 except that the gas would be shipped to LFC via a new onshore gas line instead of being re-injected on Platform Holly.
2. The new onshore gas pipeline would be constructed from the onshore EOF location to the LFC.
    a. The existing 6" offshore gas pipeline comes to shore at the EOF. A tie-in would be made at EOF to a to-be-constructed onshore gas pipeline.
    b. A to-be-constructed gas pipeline would follow the existing Line 96 pipeline route to the entrance of LFC.
    c. From the entrance to LFC, the to-be-constructed onshore gas pipeline would use XOM's existing pipe route which includes buried lines and an elevated pipe rack. The line would be routed to the to-be-constructed LFC gas processing plant.

Right of Way (ROW) agreements would have to be acquired to build this new onshore gas pipeline from the EOF to LFC. The feasibility of permitting and acquiring ROW agreements for an onshore sour gas pipeline were not investigated. It is anticipated that it could be very difficult to acquire these ROW agreements from current Landowners, as this would not be a common carrier pipeline.

3. The POPCO plant currently services XOM, but XOM plans to redirect its gas to offshore injection in 2018. At that time, the POPCO plant will be idled unless the minimum throughput of 25,000 MCFD is available to keep the plant running. Venoco does not have such volumes. Due to the short timeframe available at POPCO, and the low volume of Venoco's produced gas, a new gas processing plant would be required.

4. The new gas processing plant would be constructed at LFC and co-located with the dry oil receiving station.
5. NGL/LPG tankage would be constructed. NGL/LPG's would be sent to XOM for processing at SGTP (50 BPD) and injected into the sales oil line (150 BPD).
6. Venoco's new gas processing plant would be tied into the existing SCG sales line at LFC. Power would be supplied from the existing LFC substation.
7. Fresh water would be supplied from the same water well drilled for the dry oil receiving station. Piping would be installed to service the gas plant.
8. The new control room for the gas plant would be co-located with the dry oil receiving station.

4.2.3 Scenario 3: Current Production, Dry Oil to LFC via Existing Onshore Line, Gas to LFC via New Offshore Line

1. Scenario 3 facility changes are the same as Scenario 2 except that the gas would be shipped to LFC via an offshore gas line instead of via an onshore pipeline.
2. The offshore gas pipeline would be constructed from Platform Holly to LFC.
    a. The pipeline would come to shore using XOM's existing tunnel if there is room; if there isn't room, HDD would be constructed.
    b. A tie-in would be made at the entrance to LFC from the offshore pipeline to a to-be-constructed onshore gas pipeline.
    c. The onshore gas line would use XOM's existing pipeline routing which includes buried lines and an elevated pipe rack.
    d. The existing 6" gas line from Platform Holly to the EOF would be decommissioned; the cost for such decommissioning is not included in the cost estimate.

4.2.4 Scenario 4: Current Production, Dry Oil and Gas to LFC via New Offshore Lines

1. Scenario 4 facility changes are the same as Scenario 3 except that the dry oil would be transported to LFC through a to-be-constructed offshore dry oil pipeline.
2. Due to limited barge space for holding 10 miles of pipeline, additional costs would be incurred to lay this second offshore pipeline.
3. The onshore Line 96 would be abandoned in place and associated surface equipment along the route (four intermediate shutdown block valve vaults and associated equipment) would be removed. The equipment at the PAAPLP pipeline tie-in receipt end of Line 96 located at Tautrim, northwest of LFC entrance, would also be removed.
4. The existing 6" emulsion line from Platform Holly to the EOF would be decommissioned; the cost for such decommissioning is not included in the cost estimate.

4.3 Cost Summary

Order of magnitude numbers for each scenario are discussed below. Details for these estimates are shown in Appendix A. The estimates are based upon the Jacobs Engineering Group JUL 2000 South Ellwood Production Expansion LFC Processing Study, the Venoco AUG 2008 Ellwood DEIR consolidated comments, escalation factors as described in Appendix A, the FERC data shown in Appendix B, actual onshore pipeline cost for Line 96, actual offshore pipeline cost for recent work completed in California, recent similar oil and gas production facilities construction activities, vendor feedback, and client information provided.

- **Scenario 1** would use the existing crude oil emulsion pipeline and the existing oil sales pipeline (which would be re-routed from its current sales point at the Tautrim property into LFC approximately 1.3 miles to a new oil receiving station). The new oil receiving station and tankage would be built in LFC. The order of magnitude cost for this scenario would be approximately $45 million. Without the use of the EOF in this scenario, the hydrogen sulfide (H_2S) levels in Line 96 would be higher than current levels due to the limited offshore processing capability. The water currently processed at the EOF would be re-injected offshore. Produced gas would also be re-injected offshore. Reinjection of the produced gas would force premature cessation of production for Platform Holly due to the limited capacity of the permitted gas injection zone. It is estimated that the gas injection zone would be at full capacity in less than five years if all produced gas were re-injected. This is the only scenario which considered re-injection of all produced gas.

- **Scenario 2** is the same as Scenario 1 except for the handling of produced gas. In this scenario, an onshore gas pipeline would be built to bring produced gas from Platform Holly to LFC. A gas processing plant would be built at LFC so that gas could be processed and sold. The order of magnitude cost of this scenario would be $109 million. Without the use of the EOF in this scenario, the H_2S levels in the newly built gas line would be high due to limited offshore processing capability. Right of Way (ROW) agreements would be required for the new gas line; it is anticipated that it could be very difficult to obtain such agreements from current landowners as this would not be a common carrier pipeline.

- **Scenario 3** is the same as Scenario 2 except that the pipeline to bring produced gas from the platform to LFC would be constructed offshore. The order of magnitude cost of this scenario is $166 million. There are no local vessels that could lay such a line, so this cost includes mobilizing a vessel from out of state, or possibly out of country, depending on market conditions and vessel availability at the time of installation. Construction of such an offshore pipeline would have impacts on the marine environment, which would need to be examined. This scenario would relocate the majority of the unprocessed gas pipeline transfer route to LFC from onshore to offshore.

- **Scenario 4** is the same as Scenario 3 except that the existing Line 96 would be abandoned and both oil and gas would be transported to LFC via offshore pipelines. The order of magnitude cost of this scenario is $233 million. It is anticipated that a cargo barge (with its associated equipment), in addition to a pipe lay vessel, would be required to bring the required 20 miles of pipeline into California. This scenario would relocate the majority of both the unprocessed gas and oil pipeline transfer route to LFC from onshore to offshore.

There are many factors that can vary widely when determining the cost for each scenario. For instance, costs for permitting were included, but costs for mitigation measures that may be required to obtain the permit were not included. Such mitigation costs could increase permitting costs significantly. The cost of removing the facilities at the EOF is substantial, but is not included in any of the above numbers; a separate report will address these costs. All scenarios will incur increased abandonment and decommissioning costs to Venoco as all scenarios require new wells and facilities. None of these additional costs were estimated or are included in this report. The operating costs at LFC will be higher than those at EOF as XOM will have joint fees for shared roads, security, pipe rack, and common operating systems. These costs were not quantified for this report.

The order of magnitude costs are based on available previous studies and recently executed onshore and offshore pipeline construction projects in California (escalated to present day dollars), prior work performed by InterAct, vendor input where available, and estimates as available from Venoco. These estimates are adjusted to December 31, 2014. It is important to note that actual costs will be higher as construction of any scenario cannot occur immediately due to engineering, permitting, and lead time required for such construction.

5.0 CONCLUSIONS

- Scenario 1 would be short lived (less than 5 years) due to limited gas injection capacity in the Rincon formation. Platform Holly would have premature cessation of oil production once the Rincon stops accepting gas injection.
- Scenario 1 would result in a complete loss of revenue to Venoco and the State of California after about 5 years due to premature cessation of oil production
- Scenario 1 would also result in significant loss of revenue to Venoco and its lessors due to the inability to sell gas and associated saleable byproducts currently being sold at the EOF.
- Scenario 1 significantly accelerates the abandonment cost of Platform Holly and associated pipelines, as it forces premature cessation of production.
- Scenario 2 includes construction of an onshore gas pipeline with significant levels of H_2S. This line would require ROW agreements; the feasibility of permitting and acquiring such agreements was not investigated. It is anticipated that it could be very difficult to acquire these ROW agreements from current landowners since this would not be a common carrier pipeline.
- Scenarios 3 and 4 would involve construction in the offshore marine environments. These would require an EIR to identify potential impacts and appropriate mitigation.
- H_2S levels traveling through Line 96 would be higher in scenarios 1-3 than current levels due to limited offshore processing facilities.
- The available deck space and structural capacity of Platform Holly are significant limiting factors to building a full offshore gas processing plant. The cost of the changes to the platform required to build such a plant are beyond the scope of this report. Even if such a plant could be built, there would be significant issues disposing of the "off-spec" gas which would require a large offshore "fulltime" flare. Such a flare is currently not permitted and poses significant challenges.
- Without the EOF, some deck extension would be required on Platform Holly in all scenarios to allow for treatment and flaring of the produced gas as required for routine repair and maintenance activities.
- Power, gas supply, pigging facilities, and communication facilities would remain at the EOF for all scenarios. All other above ground equipment would be removed. Cost for such removal is not included in any of the cost estimates provided.
- Support services and facilities at LFC are limited, particularly fresh water supply, produced water disposal capabilities, and long term sour gas handling facilities.
- Operating costs at LFC were not evaluated, but are anticipated to be higher than the EOF operating costs, since costs would include shared cost of road and pipe rack maintenance, VRU/flare system maintenance, security staff, and any other common services between XOM and Venoco.

- All scenarios accelerate abandonment of the EOF and incur increased abandonment cost for Venoco (for new water supply well, new pipelines, and new facilities at LFC, etc.). These additional costs were not quantified or included in any of the cost estimates in this report.
- All scenarios would require significant construction at LFC and along the pipeline routes. An Environmental Impact Report (EIR) would be required to identify the potential impacts if any of the scenarios are pursued beyond the conceptual phase.
- Cost estimates are order of magnitude only and are based upon the Jacobs Engineering Group JUL 2000 South Ellwood Production Expansion LFC Processing Study, the Venoco AUG 2008 Ellwood DEIR consolidated comments, escalation factors as described in Appendix A, the FERC data shown in Appendix B, actual onshore pipeline cost for Line 96, actual offshore pipeline cost for recent work completed in California, recent similar oil and gas production facilities construction activities, vendor feedback, and client information provided. Costs are escalated to December, 2014. Actual costs would be higher as the time for engineering, permitting, and planning for long lead items would be significant.
- Inventory capital, sales tax, spare parts, site-specific conditions, royalties or process fees, operations and maintenance costs, revenue loss as a result of facility downtime during hook-up of new or modified facilities, training costs, access costs, and mitigation costs were not investigated, except where readily available. Due to the numerous factors involved, this brief list of items not investigated should not be considered all inclusive.
- There is a possibility that none of the four scenarios would be feasible due to environmental impacts and permitting issues, depending on the results of environmental studies. Permitting feasibility was not investigated in this report.

APPENDIX A – VENOCO EOF RELOCATION SCENARIOS AND ORDER OF MAGNITUDE COST ESTIMATES

Venoco Ellwood Onshore Facility (EOF) Relocation Alternatives and Costs
Scenario 1, 2, 3, and 4 Order of Magnitude Cost Estimates
Assumes Current Production Volumes; See section 3.0 and 4.1 for scenario descriptions and simplified block diagrams, respectively

Item Number	Item Description	Scenario 1	Scenario 2	Scenario 3	Scenario 4	Comments
		Order of Magnitude Dec 31, 2014 Total Estimated Cost				
1	Engineering - Final Design Specs	$2,400,000	$4,460,000	$3,510,000	$3,590,000	Assumed to be 10% of items 5-32 LESS items 6,7,8,9,11,26,27,33,40,47; these items are assumed to already have sufficient engineering included. The 10% factor is based upon industry experience.
2	Field and Installation Surveys	$360,000	$520,000	$530,000	$540,000	Assumed to be 1.5% of items 5-32 LESS items 6,7,8,9,11,26,27,34,40,47; these items are assumed to already have sufficient field and installation surveys included. The 1.5% factor is based upon industry experience.
3	Permit application and processing, CEQA, and EIR estimated cost.	$1,000,000	$2,000,000	$1,000,000	$1,000,000	Permitting activities estimate is based upon industry experience for this type of work.
4	Project Management Costs for Execution Phase	$2,400,000	$3,460,000	$3,510,000	$3,590,000	The 10% factor is based on the Plant Design and Economics for Chemical Engineers book by Peters and Timmerhaus, Fifth Edition 2004, Table 6-4. The factor is applied to items 5-32 LESS items 6,7,8,9,11,26,27,33,40,47 which are assumed to already have sufficient execution phase project management costs included.
5	New Platform Holly Risers for new oil and gas pipelines based upon given scenario parameters (one versus two lines).			$780,000	$1,550,000	**Not in Scenario 1 & 2.** **Scenario 3:** Uses Jacobs 2000 number for Holly Risers for 1 new line with 1/2+0.5 adjustment factor since 1 line and application of 2000-2014 escalation factor of 2.146. **Scenario 4:** Uses Jacobs 2000 number for Holly Risers for 2 new lines with application of 2000-2014 escalation factor of 2.146.
6	Pipelay Vessel plus Dive Submersible Vehicle (DSV) Mob/Demob from Gulf of Mexico to Santa Barbara area			$15,280,000	$15,280,000	**Not in Scenario 1 & 2.** **Scenario 3 & 4:** $250k per day pipelay vessel in 2011 escalated. Assume 18 days transit each way with escalation factor of 1.094 for 3 years. Current rates for DSV times 16 days transit each way.
7	Lay Barge Operations - 10 miles (New oil and gas pipelines). Sc 1.64 MM per mile unit cost in 2011. Escalation factor of 1.094 for 3 years.			$57,930,000	$114,650,000	**Not in Scenario 1 & 2.** **Scenario 3 & 4:** Based upon DCOR 2011 estimate with Mob/Demob removed, and in line with Beta 2011 and 2013 EMC report. Scenario 3 has 1 line and Scenario 4 has 2 lines.
8	Cargo barge with associated vessels to transport offshore pipe to California if over 10 miles of pipe to be installed.				$1,180,000	**Not in Scenario 1, 2, & 3.** **Scenario 4:** Estimated trucking of pipe from Gulf of Mexico to West Coast with 45 days of vessel support from Washington (Cargo Barge, Tug, Port Team, Demurrage, and Crews) all inclusive of round trip based upon industry experience for this type of work. First line transport is covered in item 6. Pipelay costs are assumed to be covered in items 7 for second line.
9	New Shore Trenching/Pull and Risers for 2 lines from Jacobs 2000 No longer acceptable, so HDD drill (new sales oil and gas pipelines)			$3,100,000	$5,100,000	**Not in Scenario 1 & 2.** **Scenario 3 & 4:** Venoco provided $4 MM for HDD portion of the actual cost for power cable project in OCT 2013. Assume $1 MM Mob/Demob and $2 MM per line. Escalation factor of 1.0204 applied for 1 year. Scenario 3 has 1 line and Scenario 4 has 2 lines.
10	Offshore Gaviota emulsion line tie-in to Line 96 (onshore at EOF).	$500,000	$500,000	$500,000		**Not in Scenario 4.** **Scenario 1, 2, & 3:** Pipelines are presently routed overhead at EOF and a new buried line in 12' wide easement would be needed. Venoco indicated 650 feet long, and will likely need to also remove 1 or 2 existing lines in easement. Assume $300k trench/backfill/line removal plus $200k new line install.
11	Offshore Gaviota gas line tie-in to edge of EOF plant near tie-in to Line 95 (onshore at EOF). Trench/Backfill covered in Item #10.		$300,000			**Not in Scenario 1, 3 & 4.** **Scenario 2:** Pipelines are overhead at EOF and a new buried line in 12' wide easement would be needed. Assume done at same time as item #10. Assume $100k second line removal plus $200k new line install.
12	New Holly Oil Shipping Pump	$730,000	$730,000	$730,000	$730,000	Assume $300k pump plus $430k install and existing pump removal (Holly space limitations).
13	Redrill Holly Water Injection Well	$8,600,000	$8,600,000	$8,600,000	$8,600,000	Venoco number that includes site recovery and anticipated P&A of existing well to permit conversion. Drill and complete cost estimate varies from $8.6 to $10.4 MM, depending on Bottom Hole Location (BHL). Venoco historical drilling costs (past 5 years) range from $6 to $18 MM per well at Platform Holly.
14	Upgraded Holly Water Injection Pump	$1,000,000	$1,000,000	$1,000,000	$1,000,000	Assume $450k pump plus $550k install and existing pump removal.
15	New Holly Chemical Injection and Heating Systems to minimize asphaltene precipitate formation.	$600,000	$600,000	$600,000	$600,000	Assume $300k for installed chemical pump skid plus $300k for installed line heater.
16	New Holly Flowmeter and cut monitor (M&W) plus pipeline SCADA to LFC.	$1,000,000	$1,000,000	$1,000,000	$1,000,000	Assume $1 MM for installed flowmeter/cut monitor and SCADA to LFC based upon industry experience.
17	New Holly Deck Extension with facilities for Maintenance Flaring on Holly.	$3,770,000	$3,770,000	$3,770,000	$3,770,000	Venoco provided 2012 $3.545 MM estimate for 200 SF platform deck extension with structural work and facilities for maintenance flaring on Holly.
18	EOF existing WWDT H&A with decommission and facilities removal.	$400,000	$400,000	$400,000	$400,000	Based upon industry experience for similar type work.
19	EOF SCG modification of pressure controlled delivery of sales quality gas at EOF to Platform Holly subsea 4" utility gas line required for Holly flare pilot and drilling rig generators increased footprint and removal line.	$500,000	$500,000	$500,000	$500,000	Assume $100k for valves/controls and $250k for new meter plus $150k for install based upon industry experience.
20	New EOF 4" buried line from EOF pig receiver to SCG tie-in at EOF with modifications for smart pigging of 4" line. There will need to be space for temporary tankage and equipment with potential Pig Launcher/Receiver modifications for smart pigging capability. Trench/backfill covered in item #10 for Scenarios 1, 2, and 3.	$500,000	$500,000	$500,000	$700,000	**Scenario 1, 2, & 3:** Assume $100k second line removal, $200k new line install, and $200k pig station modifications. **Scenario 4:** Pipelines are overhead at EOF and a new buried line in 12' wide easement would be needed. Venoco indicated 650 feet long, and will likely need to also remove 1 of 2 existing lines in easement. Assume $300k trench/backfill/line removal plus $200k new line install plus $200k pig station modifications.
21	EOF upgrade/replace Cathodic Protection (CP) System for remaining existing subsea lines and buried EOF lines that remain. Plus upgraded Line 96 to LFC CP System for new onshore line segment protection. Plus new CP System for new Onshore Gas Line to LFC. Refer to comments column for information regarding which of the above listed items is applied in scenario 1, 2, 3, and 4.	$800,000	$700,000	$500,000	$1,000,000	**Scenario 1:** Assume $600k for anode sled for subsea lines (qty 2) plus $200k for EOF 4" Util/Line 96 (qty 2). Venoco provided a budget item for anode sleds for the Holly pipelines in 2012 for $502,000 that was escalated to $600k. **Scenario 2:** Assume $400k for anode sled for subsea lines (qty 4) plus $300k for EOF 4" Util/Line 96/Sour Gas (qty 3). **Scenario 3:** Assume $300k for anode sled for subsea lines (qty 1) plus $200k for EOF 4" Util/Line 96 (qty 2) plus $100k for add sacrificial anodes on new oil & gas offshore/onshore lines. **Scenario 4:** Assume $600k for anode sled for subsea lines (qty 3) plus $100k for EOF 4" Util (qty 1) plus $300k for sacrificial anodes on new oil & gas offshore/onshore lines.
22	EOF SCE modification of power supply to provide 16.5 kVA versus 12.47 kVA at EOF, which currently sends power to Holly via 16.5 kVA subsea power cable.	$2,000,000	$2,000,000	$2,000,000	$2,000,000	Assume $800k equipment, including capacitor banks for power factor correction plus $500k install plus $250k net switchgear plus $450k SCE engr/other fees based upon industry experience.
23	No removal of other facilities at EOF included.	$0	$0	$0	$0	Clarification regarding EOF decommissioning and facilities removal not in this cost estimate, unless otherwise noted.
24	Decommission and abandon in place 10.7 miles of 6" Line 96 at PAAPLP tie-in end for Scenarios 1, 2, and 3. Scenario 4 abandons the entire Line 96.	$50,000	$50,000	$50,000	$350,000	**Scenario 1, 2, & 3:** Assume $50k for grouting and mob/demob based upon location. **Scenario 4:** Assume $150k for grouting line in place with mob/demob. Assume $200k for 4 vault abandonments along line route.
25	Removal of facilities at PAAPLP tie-in end of 6" Line 96	$300,000	$300,000	$300,000	$300,000	Assume $20k per day for crews/equipment for 10 days for removal plus $100k for restoration.
26	New Onshore Oil Pipeline Installation - 1.3 miles from Line 96 disconnect to LFC Dry Oil Receiving Station	$4,100,000	$4,100,000	$4,100,000		**Not in Scenario 4.** **Scenario 1, 2, & 3:** See *Note 7* with $2.667 MM per mile times escalation factor of 1.197.
27	New Onshore Gas Pipeline Installation - 9.6 miles along Line 96 routing from EOF to new LFC Gas Plant.		$30,620,000			**Not in Scenario 1, 3, & 4.** **Scenario 2:** See *Note 7* with $2.667 MM per mile times escalation factor of 1.197.

Venoco Ellwood Onshore Facility (EOF) Relocation Alternatives and Costs
Scenario 1, 2, 3, and 4 Order of Magnitude Cost Estimates
Assumes Current Production Volumes; See section 3.3 and 4.1 for scenario descriptions and simplified block diagrams, respectively

Item Number	Item Description	Scenario 1	Scenario 2	Scenario 3	Scenario 4	Comments
		Order of Magnitude Dec 31, 2014 Total Estimated Cost				
	New LFC Dry Oil Receiving Station					
28	New LFC Sales Oil Line Check meter for use Offshore with associated instrumentation, shut-offs and equipment.	$1,020,000	$1,020,000	$1,020,000	$1,020,000	Vendor provided Line 96 information from 2004 to 2013 timeframe of $930 that was escalated.
29	New Holly-LFC Sales Oil Line Smart Pigging equipment/facilities modifications.	$500,000	$500,000	$500,000	$500,000	Assume $500k for onshore pigging equipment/facilities modifications based upon industry experience.
30	New LFC 10,000 BBL Inland Oil Tank (minimum 130 dia. Fixed Roofed Water Reject Wet Oil Tank.	$2,300,000	$2,300,000	$2,300,000	$2,300,000	Assume $1.9 MM for 2 tanks plus $200k for heat medium equipment plus $300k for improvements/gravel/perimeter. Based upon escalated other similar component costs and industry experience.
31	New LACT at LFC for Sales Oil	$600,000	$600,000	$600,000	$600,000	Vendor provided 2011 $475,000 cost for EOF LACT upgrade without piping, valves, meter, proving connections, or site preparation. Assume $400k for new LACT equipment plus $200k for install.
32	New LFC Sale Oil Line from LACT to Gaviota PRA/PLP and LFC	$500,000	$500,000	$500,000	$500,000	Assume $700/trench/bucket = use $200k mobilize, install. Assume less than 500 ft.
33	XOM LFC Land use estimated cost (5 acres for New Dry Oil Receiving Station)	$1,650,000	$1,650,000	$1,650,000	$1,650,000	Calculation assumes $15k per year per acre with 3% escalation. The noted indicates actual cost of $75k per acre per month. Lease rate for Facility, which equates to $375 per month for 5 acres. Rental was escalated by 3% per year and a 5% escalation factor was used. See Note 12.
34	XOM LFC VRU/Flare Feeder Lines/ connections at Dry Oil Receiving Station.	$900,000	$900,000	$900,000	$900,000	Assume $400/trench/bucket plus $200k new line install. Assume less than 400 ft. Based upon escalated other pipelines or component costs and industry experience.
35	XOM LFC sales quality gas feeds for heating at Dry Oil Receiving Station.	$500,000	$500,000	$500,000	$500,000	Assume $300/trench/bucket plus $200k new line install. Assume less than 500 ft.
36	SCE LFC Power feeder power at Dry Oil Receiving Station	$2,000,000	$2,000,000	$2,000,000	$2,000,000	Assume $500 SCE transformer equipment plus $1,000/meter plus $500k SCE engineer fees. Assume $500k for electrical/switchgear equipment at new station.
37	New LFC fresh water well needed for Fire Water System at Dry Oil Receiving Station.	$100,000	$100,000	$100,000	$100,000	Based upon industry experience for similar type well. This is a minimum estimated cost number, since cost varies in the depths.
38	New LFC Fire Water System at Dry Oil Receiving Station.	$1,250,000	$1,250,000	$1,250,000	$1,250,000	Assume $200k Fire Water Pump plus 1000 BBL Tank of $350k plus $200k/acre fill station. Assume $300/trench/bucket plus $200k new line install. Assume less than 300 ft.
39	New LFC Control Room at Dry Oil Receiving station.	$2,000,000				**Not in Scenario 2, 3 & 4:** Included in item #40 **Scenario 1:** Assume $850k for building shell $300k for building internals/facilities plus $1 MM for electrical/PLC/communications.
	New LFC Gas Plant					**Not in Scenario 1**
40	New Gas Plant at LFC, 20DB design rate with 10 MMSCFD; use 8.2 MMSCFD throughput (adjustment factor		$14,370,000	$19,530,000	$14,370,000	See Note 8 (adjustment factor) and Note 9 (escalation factor)
41	New Holly-LFC Gas Line Smart Pigging equipment/facilities modifications. Note will need to add space for pigging facilities and associated equipment at LFC new dry oil and gas plants. Colocate new risers Assume in 10 MMSCFD Gas Plant #					Included in item #40
42	New NGL/LPG Tankage LFC 524 BPD. Use 200 BPD throughput (adjustment factor.		$9,140,000	$9,140,000	$9,140,000	No validated NGL/LPG throughput BPD number for 2009, so used basis 2000. Uses 2000 had 22000 GPD/42 = 524 BPD NGL/LPG. See Note 8.
43	New LFC Sales NGL/LPG Line from NGL/LPG Tankage to XOM tie-in. Assume in NGL/LPG Tankage #					Included in item #42
44	New LFC Oil NGL/LPG Injection System at LACT		$450,000	$450,000	$450,000	Vendor provided 2011 $400k cost for Oil NGL Injection System skid; add $50k for escalated to install location value.
45	New SCG Metering and Odorant Station at LFC		$1,800,000	$1,800,000	$1,800,000	Vendor clarified that this equipment was not included in item #40, which would include new Gas Dehydrator, meter, odorant station, automatic shutdown controls, installing equipment, and SCADA. Number is within order magnitude range based upon industry experience.
46	New LFC Sale Gas Line from Gas Metering Station at SCG line LFC. Assume in 10 MMSCFD Gas Plant #					Included in item #45
47	XOM LFC Land use estimated cost (5 acres for New Gas Plant) Colocate with New Dry Oil Receiving Station		$1,650,000	$1,650,000	$1,650,000	Calculation assumes $15k per year per acre with 3% escalation. The noted indicates actual cost of $75k per acre per month. Lease rate for Facility, which equates to $375 per month for 5 acres. Rental was escalated by 3% per year and a 5% escalation factor was used. See Note 12.
48	XOM LFC VRU/Flare Feeder Lines/ connections at New Gas Plant. Assume in 10 MMSCFD Gas Plant #					Included in item #40.
49	SCE LFC Power feeder power at New Gas Plant. Colocate with New Dry Oil Receiving Station with assumed $200k additional electrical items for New Gas Plant.		$500,000	$500,000	$500,000	Co-located with New Dry Oil Receiving Station, so assume add $200 equipment plus $200k install plus $100k engineer fees. Majority of SCE cost exists are included in item #36.
50	New LFC fresh water well needed for water source needed for Fire Water System at New Gas Plant. Colocate with New Dry Oil Receiving Station with assumed same fresh water well source		$300,000	$300,000	$300,000	Assume $100/trench/bucket within new colocated plant area plus $200k new line install. Assume less than 200 ft.
51	New LFC Fire Water System at New Gas Plant. Colocate with New Dry Oil Receiving Station and assume above number sufficient for both New LFC plants.					Included in item #37 and #38
52	New LFC Control Room at New Gas Plant. Colocate with New Dry Oil Receiving Station. Assume in 10 MMSCFD Gas Plant #.					Included in item #40.
	Estimated Project Total:	$44,519,000	$103,193,000	$145,340,000	$233,483,000	

Notes:
1. Use "AVG Heavy Construction annual escalation rate" of 1.0/114 per year from 2000-2008 is: 1.793
2. Use "AVG Heavy Construction annual escalation rate" of 1.0104 per year from 2008-2014 is: 1.197
3. Use "AVG Heavy Construction annual escalation rate" for 2000-2008 times 2008-2014 (2000-2014) is: 2.146
4. Not all decommissioning and facilities removal costs are included except for EOF WWTP, ESA.
5. Add/DM use forecast included, which are assumed to be high Estimate.
6. Add/Deletions of other government entity fees will be based except for some associated with pipeline installation where no line data is included such costs.
7. $74.50/bbl is the Low 90 Boring 2008-2011 Line 324 WLPA = $7.662 MM/yr mile Boring by 1.197 BEA escalation factor. Permit fees included in this cost.
8. Unless otherwise noted, adjustment factors for Vincent 2013 estimated costs and Commitment Planning rate (or similar) to 2008 design rate (or site).
9. Assumed Engineers Inclusive Number of magnitude cost estimates.
10. Assumed values are based upon industry experience.
11. "AVG Heavy Construction annual escalation rates" are based upon BEC 2014 ESTI Decommissioning Cost Update for Pacific OCS Region Facilities Final Report information pertaining to heavy construction (1.1
12. Engineering News Record (ENR) building and construction cost indexes for San Francisco based on a 14 year timeframe yielded an annual escalation rate of 1.02 per year

APPENDIX B– FERC PIPELINE COST DATA

US PIPELINE COSTS, ESTIMATED

Table 4

Size, in.	Location[1]	Length, miles	$ Material	Labor	Misc.[2]	ROW & damages	Total	$/mile
LAND PIPELINES								
4	Colorado (lat.)	3	261,100	754,600	626,500	95,000	1,737,200	579,067
8	Wyoming	2.54	1,545,000	304,000	2,510,000	45,000	4,404,000	1,733,858
12	Connecticut (L)	1.3	937,395	6,211,004	5,543,036	1,004,352	13,695,787	10,535,221
12, 16	New York-Pa. (lat.)	17.12	2,998,071	14,929,277	9,696,837	2,444,507	30,068,692	1,756,349
16	Virginia (L)	3.3	1,726,152	7,308,669	10,277,800	2,044,528	21,357,149	6,471,863
	Tennessee	6.5	3,111,132	20,150,126	20,145,261	4,206,935	47,613,454	7,325,147
	Connecticut (lat.), (R)	9.1	4,301,395	27,560,707	22,639,857	4,611,222	59,113,181	6,495,954
16, 20	Ohio	1.02	2,321,531	2,175,000	2,585,597	325,000	7,407,128	7,261,890
16, 24	Massachusetts (lat.)	5.10	2,458,318	34,167,322	32,231,703	18,141,360	86,998,703	17,058,569
18, 24	Florida	1.17	957,569	2,159,912	3,008,968	—	6,126,449	5,236,281
20	Iowa	0.31	190,290	365,284	182,108	751,433	1,489,115	4,803,597
	Louisiana	0.80	1,100,243	1,794,432	1,415,325	211,673	4,521,673	5,652,091
	New Jersey (lat.)	2.40	2,586,698	11,023,251	13,313,043	1,818,084	28,741,076	11,975,448
	Nebraska	5.52	1,833,491	7,267,880	4,440,164	1,492,970	15,034,505	2,723,642
20, 26	Pennsylvania-New Jersey (L)	19.00	9,600,000	3,813,000	134,324,000	14,635,000	162,372,000	8,545,895
24	Nebraska	2.34	812,058	1,577,075	871,469	177,650	3,438,252	1,469,338
	Virginia	5.7	3,904,565	12,073,131	15,879,445	3,376,394	35,233,535	6,181,322
	Pennsylvania (L), (R)	23.00	11,544,089	33,427,875	16,640,071	3,621,000	65,233,035	2,836,219
24, 42	Louisiana	17.89	28,990,598	58,359,504	63,969,084	6,008,942	157,328,128	8,794,194
26	Connecticut (L)	2	2,602,194	9,961,609	9,482,500	2,846,692	24,892,995	12,446,498
30	California	0.35	737,200	942,904	709,965	14,033	2,404,102	6,868,863
	New York (L)	3.1	4,608,100	11,627,450	10,268,204	1,005,000	27,508,754	8,873,792
	Ohio	76	44,688,070	157,491,993	119,422,574	27,998,646	349,601,283	4,600,017
	Pennsylvania-New York	124	90,520,104	268,436,504	283,967,958	25,630,275	668,554,841	5,391,571
36	Georgia (L)	3	312,665	16,208	698,353	11,503	1,038,729	346,243
	Washington	140	144,990,000	437,711,000	240,028,000	—	822,729,000	5,876,636
42	New York (R)	3.30	7,414,798	23,790,586	24,046,291	6,404,150	61,655,825	18,683,583
	New York-Conn. (R)	4.50	12,342,663	55,016,431	35,456,327	7,792,725	110,608,146	24,579,588
	Pennsylvania (L)	5.27	8,956,100	19,564,751	24,202,151	929,970	53,652,972	10,180,830
	New Jersey (L)	6.31	8,781,084	35,142,757	39,999,834	10,124,344	94,048,019	14,904,599
	New Jersey (L)	6.92	10,693,345	26,596,687	35,624,052	9,172,667	82,086,751	11,862,247
	Pennsylvania (L)	11.47	18,057,409	58,445,706	59,494,912	1,847,500	137,845,527	12,017,919
	New York (R)	12.30	31,681,502	104,345,477	88,377,226	21,012,659	245,416,864	19,952,591
Total projects—land		**522.63**	**$467,303,829**	**$1,453,757,512**	**$1,331,452,115**	**$179,706,214**	**$3,432,219,670**	**$6,567,208**
Total land—2013 report		**820.12**	**$781,022,881**	**$1,307,536,498**	**$1,190,625,900**	**$86,893,809**	**$3,366,079,088**	**$4,104,374**
OFFSHORE PIPELINES								
Total projects—offshore		—	—	—	—	—	—	—
Total offshore—2013 report		**22.9**	**$33,958,773**	**$89,962,995**	**$51,022,132**	—	**$174,943,900**	**$7,639,472**
Total—all projects		**522.63**	**$467,303,829**	**$1,453,757,512**	**$1,331,452,115**	**$179,706,214**	**$3,432,219,670**	**$6,567,208**
2013—report total, all projects		**843.02**	**$814,981,654**	**$1,397,499,493**	**$1,241,648,032**	**$86,893,809**	**$3,541,022,988**	**$4,200,402**

[1] L = loop, lat. = lateral, R = replacement. [2] Generally includes surveys, engineering, supervision, interest, administration, overheads, contingencies, allowances for funds used during construction (AFUDC), and FERC fees.
Source: US FERC construction-permit applications, July 1, 2013, to June 30, 2014

APPENDIX F – INTERACT REMOVAL REPORT

Venoco Ellwood Onshore Facility (EOF)
Aboveground Facilities Removal Cost Estimates

March 2015

Prepared by: InterAct
4567 Telephone Rd.
Suite 203
Ventura, CA 93003
805-658-5600
www.interactprojects.com

Prepared for:
Venoco Inc.
6267 Carpinteria Ave.
Suite 100
Carpinteria, CA 93013

TABLE OF CONTENTS

1.0 Executive Summary....1
2.0 Approach for EOF Aboveground (AG) Facilities Removal....3
3.0 Assumptions and Exclusions....7
4.0 Conclusions....8

ATTACHMENTS

Attachment 1 ORDER OF MAGNITUDE COST ESTIMATE SUMMARY
VENOCO EOF ABOVEGROUND FACILITIES REMOVAL
Attachment 2 VENOCO EOF EQUIPMENT LIST

1.0 Executive Summary

The Ellwood Onshore Facility (EOF) site has been used for oil and gas processing since around 1929. This site was modified in 1966 to receive and process oil, gas, and water from Platform Holly. Subsequently, this site was reconfigured in 1982 to process a revised mix of produced fluids from Holly. This report was prepared for Venoco internal use only to provide an order of magnitude cost estimate to remove all aboveground facilities from EOF, except for items needed to allow continued operation and production on Platform Holly. This report assumes that Platform Holly operations will continue and that Platform Holly production processing will be handled at an alternate site.

The EOF is located in the City of Goleta, just off the 101 freeway, flanked to the East by a golf course, and to the West by a resort hotel (see Figure 1.1).

Figure 1.1 – EOF Site Aerial

A conceptual 3 Phase approach for the Venoco EOF aboveground (AG) facilities removal associated with Platform Holly production is summarized below with more details provided in Section 2.0. In Section 3.0, the major assumptions and excluded items are described. Conclusions are summarized in Section 4.0. Details of the order of magnitude cost estimates are shown in Attachment 1. Attachment 2 lists the Venoco EOF equipment, but does not include the electrical transformer/switchgear items.

Below is a brief description of each phase assumed for EOF aboveground (AG) facilities removal with an order of magnitude cost estimate for each. No contingencies are included in the cost estimates. Disposal facilities are assumed to be located within Santa Barbara and Ventura counties.

- **Phase 1** involves purging and cleaning of the aboveground (AG) piping, vessels, and equipment at EOF and loading/unloading with roundtrip transportation of qualifying fluids to disposal facilities. As part of the decommissioning process, underground piping would also be purged to allow for safe removal of the EOF AG facilities. The purging and cleaning of the facilities is estimated to require a work crew 14 days to complete plus 2 days for mob/demob. Qualifying fluids loading/unloading with associated transportation of estimated 7,000 Barrels (BBLs) to a disposal facility is estimated to require 17 days to complete with a total Phase 1 cost estimate of $310,000.

- **Phase 2** involves demolition and removal of the EOF AG facilities. The removal materials include steel (facilities), concrete, gravel, and asphalt with a total estimated weight of 47,920 tons, including the control room and the MCC building. Disposal of materials to the receiving facility station were assumed to be via trucks with 8 loads from the EOF per day. The estimate assumes no asbestos, lead paint, or hazardous substance handling or disposal. The estimated time without any allowance for potential delays and inefficiencies is 187 days for disposal inclusive of mob/demob. No soil work (cut and disposal) is included in this phase. No disposal material salvage value is included. The cost estimate for Phase 2 is $5,330,000.

- **Phase 3** involves soil cut and backfill with grading at the EOF location and removal of electrical transformer and switchgear. There is assumed to be sufficient soil onsite at EOF to perform soil cut, backfill, and grading work without bringing in any offsite soil. Remediation, environmental monitoring, and restoration costs are not included. The soil work is estimated to require 4 trucks for 7 days. The EOF electrical transformer and switchgear removal and disposal are estimated to require 7 days to perform. The cost estimate for Phase 3 is $230,000.

- **Project Management and Permitting** includes contractor oversight and assumed permit process items, i.e., California Environmental Quality Act (CEQA) and applications. No site assessment or remediation work is included. The cost estimate for project management and permitting is $1,190,000.

The above listed order of magnitude cost estimates for the Venoco EOF Aboveground Facilities Removal were based on a high level conceptual 3 Phase approach inclusive of project management, permitting, and numerous assumptions and exceptions. Current salvage values were not included within the cost estimate due to variability of such values, but the current steel salvage value may offset disposal receiving station charges assuming other factors, such as additional cleaning and transportation are not required. Remediation, environmental monitoring, and restoration costs were excluded, but may be required at a later date when the EOF is abandoned. Since the cost estimates are based upon labor and equipment rates from engineering, demolition and construction, disposal, and trucking companies, as well as disposal receiving stations rates that vary with market conditions, these estimates and rates are considered order of magnitude only.

2.0 Approach for EOF Aboveground (AG) Facilities Removal

A walk through of the EOF location was performed on February 23, 2015 by InterAct to gather information and formulate a plan to develop an order of magnitude cost estimate for aboveground facilities removal at the EOF. This 3 phase conceptual plan is described below preceded by discussion on the method for determining the amount of removal material.

The sources of information for labor and equipment rates used in this report were gathered from various engineering, demolition and construction, disposal, and trucking companies. The JAN 2000 KB&R Abandonment of Ellwood Onshore Facility worksheet had limited information that was reviewed, used, and escalated for certain portions of the work. The liquid and solid disposal rates were acquired from disposal receiving stations in Santa Barbara and Ventura counties.

Based on the EOF site visit, use of an aerial plan view, and Google Earth Pro dimensional information, approximate volumes and truck loads of materials to be removed from EOF were estimated. Figure 2.1 has an EOF Aerial Map with color coded areas for the AG removal material areas within the approximately 5 acre EOF location. The identified removal materials include steel (facilities), concrete, gravel, and asphalt.

For the removal materials, the square foot (SF) surface area dimensional information was multiplied by height or depth in feet (FT) to acquire approximate cubic foot (CF) for the areas shown in Figure 2.1. These material CF values were converted to cubic yards (CY) and estimated material weights were applied to approximate Ton/CY, such that truck load volume, capacity, and quantities could be estimated. Roadway, gravel, and asphalt surfaces are the reference point used to estimate material removal volumes. Concrete, gravel, and asphalt areas assumed a 1 FT depth and inset concrete locations assumed a 3 FT depth by 1 FT wide perimeter wall removal.

With respect to steel associated with the facility footprints, lower than existing facility heights were used to account for cutting, pinching, and compression of steel facilities for removal via truck loads. Additionally, a void space adjustment was applied to the steel to account for incomplete compression and provide an adjusted (lower) Ton/CY value. For the concrete, gravel, asphalt and soil materials, void space was assumed to be nominal and no void space adjustment was made.

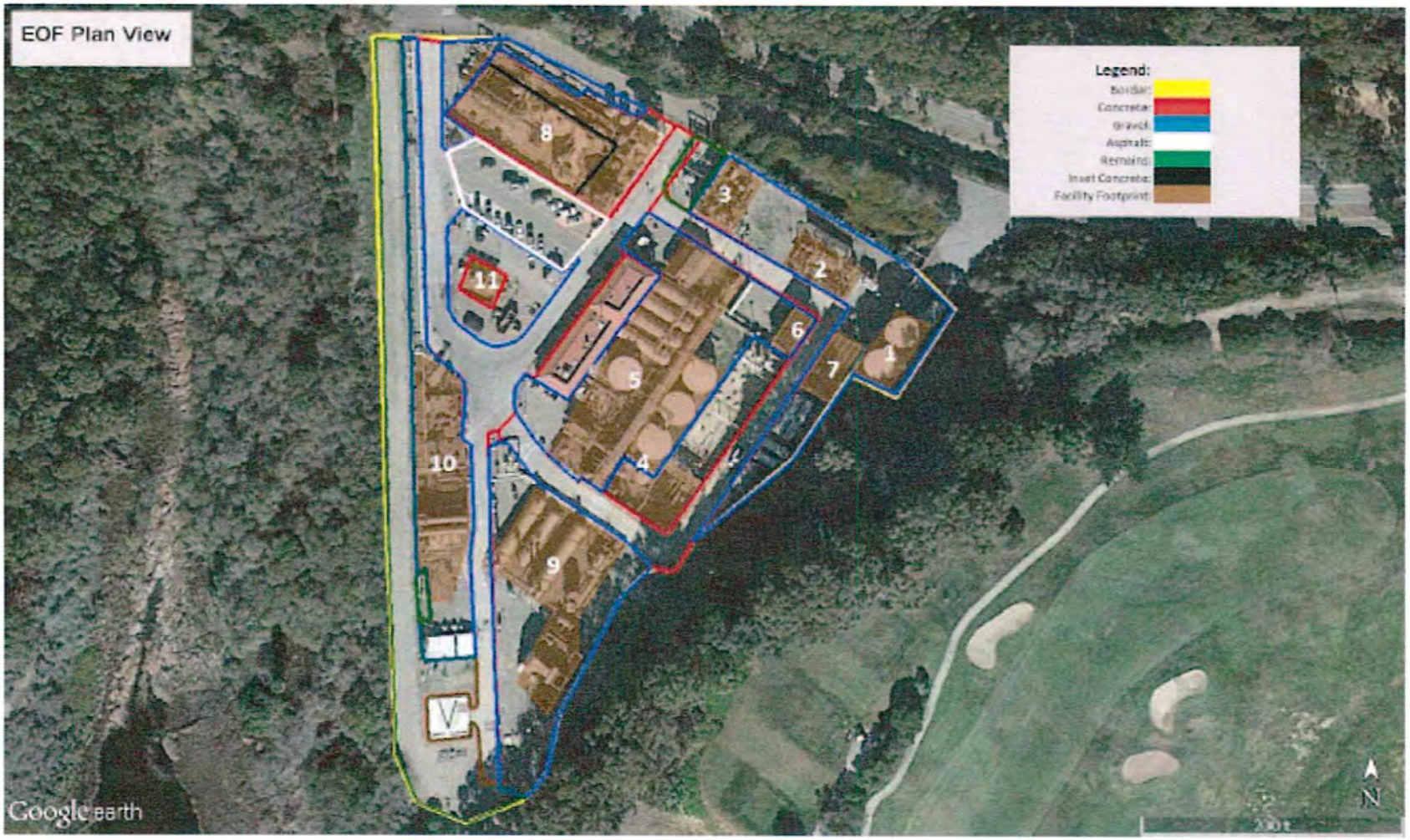

Figure 2.1 – EOF Plan View with Identified Materials and Components

The estimated material weights used for concrete, gravel, asphalt, soil, and steel were 3500, 3240, 2700, 3000, and 13230 LB/CY, respectively. To approximate soil fill volume, the inset concrete volumes and pit volumes were used.

Separate labor and equipment rates were calculated for the removal of steel, concrete, gravel, and asphalt. Separate labor and equipment rates were also calculated for the soil with grading of the EOF surface using onsite existing soil, which is assumed to be sufficient. All rates used were based upon standard time with 8 hours per day, Monday through Friday, and excluded weekends and holidays. The five different removal material crews and equipment include a combination of the following depending upon removal material: Superintendent, Construction Laborers, Water Tower, Water Truck, Loaders, Disposal Trucks, Excavator, Grader, Drivers/Operators, Hydraulic Demolition Shear, miscellaneous equipment, and subsistence.

The Southern California Edison (SCE) substation with an expanded footprint, the 4" utility line and associated facilities with pig station, and an approximately 12' wide easement on the west side of the EOF were assumed to remain on location to support production transfer from Platform Holly. No other production streams or facilities were considered in this report. No costs for modifications to the remaining EOF AG facilities were included in the cost estimate.

The switchover to SCE power supply of 16.5 kV versus the 12.4 kV power that is stepped up by existing Venoco EOF electrical equipment to the subsea cable providing power to Platform Holly is assumed to be performed so as not to interfere with demolition work.

The EOF AG Facilities Removal 3 phase approach assumed for this project is described below. Refer to Attachment 1 for order of magnitude cost estimate summary.

PHASE 1 – Purge and Clean Piping and Vessels at EOF

The tanks, vessels and lines would first be purged and cleaned in preparation for removal. No underground items will be removed, but it is assumed underground pipelines are included in this preparation work. Initially, the piping and vessels would be flushed and drained (purged). The piping, vessels, and equipment would next be cleaned with equipment and fluids to remove residual contaminants. Liquids from this cleaning process would be trucked off location to a qualifying disposal site.

The JAN 2000 KB&R cost estimate for clean and purge with a crew working for 14 days was escalated and used for the Purge and Clean task. Cost to mobilize and demobilize equipment for this purge and clean process was included in the cost estimate.

Using information from the EOF Equipment List in Attachment 2, piping and vessel volumes were estimated and totaled. The purge and clean process had an estimated 2,000 BBL of tank bottoms and 5,000 BBL of oily water (assumed to be BS&W at 6.1 to 10% for cost estimate). The tank bottoms using 2 trucks and the oily water using 4 trucks were estimated to require 8 and 9 days for removal and disposal, respectively.

The total estimated number of work days is 33 for Phase 1 without any consideration of potential delays and inefficiencies. Order of magnitude cost estimate for Phase 1 is $310,000.

PHASE 2 – Remove Aboveground (AG) Facilities at EOF

The EOF AG Facilities (steel), concrete, gravel, and asphalt would be demolished and removed in Phase 2. There was assumed to be no soil cut, haul-off, grading, or disposal required in this phase. The steel facilities would be cut, pinched, and demolished and removed via trucks to a disposal receiving station. Likewise, the EOF AG concrete, gravel, and asphalt would be demolished and removed via trucks. Based upon Venoco input, it was assumed that a maximum of 8 truckloads per day at EOF was possible. The estimated weight of the four different types of removal materials in this phase is 47,920 tons with a receiving station disposal cost of $72 per ton.

The estimated CY for the EOF AG Facilities steel, concrete, gravel, asphalt, and soil are 18070, 1791, 3765, 326, and 0, respectively. Using the estimated material weights, it was approximated that 18.9, 12, 13, and 15.6 CY/truck, respectively for steel, concrete, gravel, and asphalt would be possible. The estimated number of truckloads for the steel, concrete, gravel, and asphalt are 957, 150, 290, and 21, respectively. Based upon 2 trucks with 8 truckloads per day, the respective estimated number of days for removal of steel is 120, of concrete is 19, of gravel is 37, and of asphalt is 3. Mob/demob costs of 2 days for each of the four different types of removal materials was also included.

The total estimated number of work days is 187 for Phase 2 without any consideration of potential delays and inefficiencies. Order of magnitude cost estimate for Phase 2 is $5,330,000.

PHASE 3 – Cut/Backfill Soil with Grading and Electrical Transformer/Switchgear Removal at EOF

Included in Phase 3 is the soil cut, backfill, and surface grading work, as well as the electrical transformer and switchgear removal at the EOF. The soil work assumes that there is sufficient soil onsite and no offsite soil or hauling is required. Remediation, environmental monitoring, and restoration costs are not included in the estimated costs as it is assumed that these activities would occur at a later time when the EOF site is fully abandoned. The two inset concrete areas and five pits volumes were estimated at 9697 CY. Assuming 4 trucks onsite with 15.3 CY per truckload, this soil work was estimated to need 634 truckloads and 7 days to complete.

Removal of the 7 identified Venoco existing electrical transformer and switchgear units were estimated to require 7 days to complete inclusive of disposal. Mob/demob costs of 2 days each for the soil and electrical was also included.

The total estimated number of work days is 18 for Phase 3 without any consideration of potential delays and inefficiencies. Order of magnitude cost estimate for Phase 3 is $230,000.

Project Management and Permitting

The project management involving contractor oversight was estimated at 10 percent of the sum of the 3 Phases estimated costs. Permitting involves application preparation, processing and review, including California Environmental Quality Act (CEQA) analysis. The estimated cost for project management and permitting support for the 3 Phase EOF AG Facilities removal is $1,190,000.

3.0 Assumptions and Exclusions

Major assumptions and exclusions described in this section and throughout this high level conceptual report are not to be considered all inclusive, since there are numerous intertwined considerations, variables, and factors.

Order of magnitude cost estimates are high level with phase estimates rounded up to nearest $10,000 increment. Contingency and daily Venoco support costs are not included. Estimates excluded any remediation, environmental monitoring, and restoration. Additionally, estimates assumed that there is no presence of asbestos, lead paint, or other hazardous items that would require special processing, handling, or disposal. Venoco believes some asbestos may be present onsite. The estimates assumed that costs for identification, analysis, handling, processing, removal, and disposal of asbestos that may be onsite are not included, which could be significant. Best case scenario was assumed with no costs included for potential delays and inefficiencies, which include, but are not limited to the following items: weather, traffic, access and staging, and operational impacts.

All days in this report are standard work days, which are Monday through Friday, 8 hours per day at standard hourly rates. No overtime, weekend, holiday, or non-standard time rates were used in the order of magnitude cost estimates in this report.

This report assumed no disposal material salvage value due to rate variability and additional potential requirements, such as cleaning and/or multiple transfer challenges. Costs were estimated assuming complete demolition of all EOF aboveground (AG) facilities except for some remaining AG items required for Platform Holly continued operation. The identified remaining EOF location AG facilities include SCE substation with expanded footprint, 4-inch utility line facilities with pig station, and approximately 12 ft. wide easement on the west side of the EOF.

Day rates for crew and equipment for demolition and transport of each of the 5 disposal materials (steel, concrete, gravel, asphalt, and soil) were estimated using contractor rates and information. The number of truckloads were estimated based upon estimated volume and density of the material, truck volume capacity, and truck loading weight limits. Cost estimates assume no truckload permit costs are required for disposal transport. It was assumed that the EOF site could accommodate up to one truck per hour entering and exiting the facility for an 8 hour day, five days per week. The disposal receiving stations were assumed to be located in Santa Barbara and Ventura Counties. All disposal materials are assumed to have greater than 50 percent recyclable content.

Cost estimates assumed that no offsite soil and no soil disposal will be required. It was assumed that there is sufficient soil onsite to fill two inset concrete areas and five pits that were identified as part of the soil cut, backfill and grading process in Phase 3. The existing EOF roadway, gravel, and asphalt surfaces are the reference point (zero elevation) used to estimate material removal volumes. Concrete, gravel, and asphalt areas assumed a 1 FT depth and inset concrete locations assumed a 3 FT depth by 1 FT wide perimeter wall removal. Costs for underground facilities (e.g. – concrete pits, underground piping, etc.) removal were excluded from the estimates.

Waste liquids from the purging and cleaning of the tanks, vessels, pits, and lines were assumed to be a combination of oily water and tank bottoms and estimated at 5,000 BBL and 2,000 BBL, respectively.

Adjustments to phase activity content may be refined at a later date as more information on project requirements and constraints are further defined.

4.0 Conclusions

The order of magnitude estimated cost to remove all aboveground facilities at the EOF, excluding those items required for continued production from Platform Holly are summarized in Attachment 1. Below are some key points discussed and identified in this report prepared for Venoco internal use only.

- The order of magnitude cost estimate of $7,060,000 for the Venoco EOF Aboveground Facilities Removal was based on a high level conceptual 3 Phase approach inclusive of project management and permitting, and is subject to numerous assumptions and exceptions.
- Major assumptions and exclusions described in Section 3.0 and throughout this report are not to be considered all inclusive, since there are numerous intertwined considerations, variables, and factors.
- No disposal material salvage value was included in the cost estimates due to rate variability and additional potential requirements, such as cleaning and/or multiple transfer challenges.
- Cost estimates are order of magnitude and are based upon JAN 2000 KB&R estimates, escalation factors, labor and equipment rates gathered from various disposal, demolition and construction, and trucking companies, as well as waste disposal receiving station rates. These estimates and rates will vary with market conditions and could be further refined with additional investigation and clarification of parameters and constraints.
- Remediation, environmental monitoring, and restoration costs were excluded, but could be required at a later date when the EOF is fully abandoned.

ATTACHMENT 1

ORDER OF MAGNITUDE COST ESTIMATE SUMMARY
VENOCO EOF ABOVEGROUND FACILITIES REMOVAL

InterAct

ORDER OF MAGNITUDE COST ESTIMATE SUMMARY - Venoco EOF Aboveground (AG) Facilities Removal

CLIENT: Venoco Onshore
PROJECT: Venoco - EOF Relocation Alternatives and Costs
LOCATION: Ellwood Onshore Facility (EOF)
Goleta

NO.	DESCRIPTION	Estimated BBL, CY, or TONS	Day or Unit Rate	Work Days	TOTAL COST ESTIMATE
1.0	**Phase 1 - Purge and Clean Piping and Vessels at EOF**				**$310,000**
1.1	KB&R JAN 2000: 14 Days with Work Crew Day Rate estimated cost of $5,000 escalated by 2.146 is $10,730/day		10,730	14	$150,220
1.2	Tank Bottoms Disposal with estimated 29 truckloads estimated at $18.50/BBL + $6.00/BBL with (2) 70 BBL truck	2,000	6,860	8	$54,880
1.3	BS&W at 6.1 to 10% Disposal with estimated 72 truckloads at $9.20/BBL + $6.00/BBL with (4) 70 BBL truck	5,000	8,512	9	$76,608
1.4	Mob/Demob at 2 days for #1.1		10,730	2	$21,460
2.0	**Phase 2 - Remove Aboveground (AG) Facilities at EOF**				**$6,330,000**
2.1	Cut, Pinch, and Haul-off AG Facilities with estimated 957 truckloads @ 18.9 cubic yards per truck (2 trucks)	18,070	9,900	120	$1,188,000
2.2	Concrete Removal and Haul-off with estimated 150 truckloads @ 12 cubic yards per truck (2 trucks)	1,791	10,300	19	$195,700
2.3	Gravel Removal and Haul-off with estimated 290 truckloads @ 13 cubic yards per truck (2 trucks)	3,765	10,300	37	$381,100
2.4	Asphalt Removal and Haul-off with estimated 21 truckloads @ 15.6 cubic yards per truck (2 trucks)	326	10,300	3	$30,900
2.5	Soil Cut and Haul-off assumed to be none	0	0	0	$0
2.6	Disposal Cost at Receiving Station estimated at $72 per ton for mixed (material) loads	47,920	72		$3,450,240
2.7	Mob/Demob at 2 days each for #2.1, #2.2, #2.3, and #2.4		10,200	8	$81,600
3.0	**Phase 3 - Cut/Backfill Soil with Grading and Electrical Transformer/Switchgear Removal at EOF**				**$230,000**
3.1	Cut/Backfill Soil and Grade with estimated 634 truckloads @ 15.3 cubic yards (assume all onsite work with 4 trucks)	9,697	15,500	7	$108,500
3.2	Transformer / Building Switchgear Removal estimated at $10,000 per day/unit (7 units identified)		10,000	7	$70,000
3.3	Mob/Demob at 2 days each for #3.1, #3.2		12,750	4	$51,000
4.0	**Project Management and Permitting**				**$1,190,000**
4.1	Project Management, contractor oversight @ 10%				$587,000
4.2	Permitting				$600,000
	TOTAL				**$7,060,000**
	CONTINGENCY - None				**$0**
	GRAND TOTAL COST				**$7,060,000**

Revision	Description	By
Rev. A	Original Data Entered -- Estimate based upon verbal discussions with service providers, Venoco, Google Earth Pro Plan View SF estimates, and numerous assumptions. 3/16/15	Casey

Project Estimating Notes:

1) Order of Magnitude (OM) cost estimates are high level with phase estimates roundup to nearest $10,000 increment. Contingency and daily Venoco support are not included.
2) Estimate does not include remediation, environmental monitoring, and restoration. Estimate assumes no presence of asbestos, lead paint, or other hazardous items that will require special processing/handling.
3) Estimate assumes no offsite soil and no soil disposal from EOF are needed. Assume no disposal material salvage values. Disposal materials are assumed to have greater than 50% recyclable content.
4) Costs for potential delays and inefficiencies are not included (e.g. - weather, traffic, access and staging, operations impacts, etc.).
5) CY is Cubic Yards and BBL is Barrel; there are 42 gallons per barrel.
6) Remaining EOF Aboveground (AG) Facilities modification costs for items that will remain at EOF (i.e., SCE substation with expanded footprint, 4" utility line facilities with pig receiver station, and ~12 ft wide easement on West side of EOF) are not included.

ATTACHMENT 2

VENOCO EOF EQUIPMENT LIST

Venoco EOF Equipment List from 07/18/2005 (assumed to be current)

Tag Number	Description	Quantity	Orientation	Dimensions (feet)	
				Diameter	Length/Height
	MECHANIC REPAIR SHOP / STORAGE	1	Building		
	CONTROL ROOM BUILDING	1	Building		
	OFFICE BUILDING / EMPLOYEE CHANGE RO	1	Building		
	LAB	1	Building		12 X 12
Oil / Water Treating					
E-102	EMULSIONHEAT EXCHANGER	1	Horizontal	4.5	25
E-201 A/B/C/D	CRUDE OIL/CRUDE OIL HEAT EXCHANGERS	4	Horizontal	5.5	34
HT-201	HEATER TREATER	1	Horizontal	12	60
HT-202	HEATER TREATER	1	Horizontal	12	60
HT-203	HEATER TREATER	1	Horizontal	12	60
LACT #1	LEASE ACQUISITION CUSTODY TRANSFER	1	Skid		26 x 2
LACT #2	LEASE ACQUISITION CUSTODY TRANSFER	1	Skid		23 x 6
P-201 A/B/C	PRODUCED WATER INJECTION PUMPS	3	Skid		10 x 9
P-202	REJECT OIL PUMP	1	Skid		4 x 1
P-203	LACT #2 SHIPPING PUMP	1	Skid		11 x 4
P-217 A/B	CRUDE OIL TRANSFER PUMPS	2			
P-220	LACT #2 CHARGE PUMP	1	with LACT 2		
P-222	LACT #1 CHARGE PUMP	1	with LACT 1		
P-221	LACT SAMPLE PUMP	1	with LACT 2		
P-238	REJECT OIL TRANSFER PUMP	1	Skid		3 x 1
P-251	H-202 TRANSFER PUMP	1	Skid		3 x 2
P-254	OIL SKIMMER PUMP	1			
TK-201	PRODUCED WATER SETTLING TANK (3,000	1	Vertical	30	24
TK-202/203	OIL SURGE TANKS (2,000 BBL ea.)	2	Vertical	30	16
TK-204	REJECT OIL TANK (2,000 BBL)	1	Vertical	30	16
V-201-202	HYDROGEN SULFIDE STRIPPERS	2	Vertical	6	21.5
V-239	HEATER TREATER DRIP POT	1	Vertical	1	5
6"-PO-454-HC-D	6-inch OIL PIPELINE FROM PLATFORM	1			
4"G-1000-HC-0	4-inch UTILITY PIPELINE TO PLATFORM	1			
	PIPELINE SCRAPER RECEIVERS (PIG CATCHERS)	2			
Gas Treating					
(M-2406)	Lo-Cat® MAKE-UP TANK AGITATOR	1			
M-2401	Lo-Cat® REACTION TANK AGITATOR (IDLE)	1			
M-2402/2403	Lo-Cat® OXIDIZER TANK TURBINE	2			
M-2404/2405	Lo-Cat® NORTH PIT AGITATORS	2			
M-2407/2408	Lo-Cat® SOUTH PIT AGITATORS	2			
BL-1801/1802	Lo-Cat® OXIDIZER BLOWER	2	Skid		8 x 2
BL- 1806	Lo-Cat® COOLING TOWER FUME BLOWER	1			
BL-1808	OXIDIZER VAPORS BLOWER	1			
BL-201 A/B/C	HIRT (HYBON) BURNER BLOWERS	3			
E-1701 A/B	COOLING TOWER (IDLE)	1			
V-1101-1104	Lo-Cat® 1st STAGE GAS/SOLUTION	4	Vertical		
V-1105-1108	Lo-Cat® 2nd STAGE GAS/SOLUTION	4	Vertical		
E-200	FIN TUBE EXCHANGER	1	Horizontal		
E-202	SEAL WATER EXCHANGER (COOLER)	1			
E-203/204/205	DELEVAL COMPRESSION GAS AIR	3	Rectangula		30 x 26
E-206	G-FIN COOLER (GAS/GAS EXCHANGER)	1	Rectangula		28 x 2
E-207	YORK RICK GAS CHILLER	1	Horizontal	3.7	40
E-208	YORK BRINE CHILLER	1	Horizontal	2	12
E-209	YORK PROPANE RECEIVER INTERCOOLER	1		3	33
E-210 A/B/C/D	YORK PROPANE AIR COOLED	4	One Unit		30 x 20
E- 225	3rd STAGE DISCHARGE AIR EXCHANGER	1	Rectangula		12 x 8

Venoco EOF Equipment List from 07/18/2005 (assumed to be current)

Tag Number	Description	Quantity	Orientation	Dimensions (feet)	
				Diameter	Length/Height
E-226	COMPRESSOR JACKET WATER FIN EXCHANGER	1			
E-211	STABILIZER REBOILER	1	Horizontal	2.5	34
E- 218	1st, 2nd, STAGE DISCHARGE AIR	1	One Unit		19 x 9
E-212	STABILIZER BOTTOM COOLER	1			
E-213	DEBUTANIZER REBOILER	1	Horizontal		
E-214/215	DEBUTANIZER CONDENSER/BOTTOMS COOLER	2	One Unit		40 x 18
E-216	COMPRESSOR WATER COOLER	1	Rectangula		16 x 8
E-217A&B	FIN TUBE EXCHANGER	2	Rectangula		
E-219	LUBE OIL COOLER	1	Rectangula		
E-220B	VRU JACKET WATER AIR FIN COOLER	1	Rectangula		18 x 10
E-220A	VAPOR RECOVERY UNIT GAS AIR FIN	1	One Unit		22 x 14
E-222	VRU GAS CHILLER	1	Horizontal	4	18
E-1302	Lo-Cat® OXIDIZER AIR EXCHANGER	1	Rectangula r		20 x 14 x12
F-201	3rd STAGE DISCHARGE GAS FILTER SEPARATOR	1	Horizontal	4	14
F-207/208	GLYCOL FILTERS	2	Vertical	1	7
H-204	PROCESS FLUID HEATER (UNIFLUX)	1	Vertical	10.6	20
H-205 / 206	HIRT BURNERS	2	Rectangula		40 x 10 x 14
H-207	HIRT BURNER	1	Vertical	8	20
H-208	PROCESS FLUID HEATER (ELECTRIC)	1	Horizontal		
K-201	DELEVAL 3 STAGE GAS COMPRESSOR (4,500 hp)	1	Skid		38 x 30
K-202	YORK FIVE STAGE COMPRESSOR (1,750	1	Skid		32 x 11
K-204 A/B/C	INSTRUMENT AIR COMPRESSORS	3	One Skid		15 x 10 x 6
K-205	3 STAGE SWEET GAS COMPRESSOR (600	1	Skid		22 x 9
K-206	3 STAGE SWEET GAS COMPRESSOR (600	1	Skid		18 x 6
F-206	GLYCOL VAPOR FILTER	1	Vertical	0.7	6
P-260	VAPOR PUMP	1			
P-101A/B/C	CHEMICAL INJECTION PUMPS	3			
P-102A/B	CHEMICAL INJECTION PUMPS	2			
P-103	BULK VISCOSITY TRANSFER PUMP	1			1½ x 6
P-103A/B	CHEMICAL INJECTION PUMPS	2			
P-104	CHEMICAL INJECTION PUMP	1			
P-224A/B	CRUDE OIL BOOSTER PUMP	2			
P-1504/1505/1506	Lo-Cat® SOLUTION CIRCULATION PUMPS	3	Vertical		8
P-1505A/B	Lo-Cat® SEAL WATER INJECTION PUMPS	2			
P-1506A	Lo-Cat® SEAL WATER INJECTION PUMP	1			
P-1507A	Lo-Cat® NORTH PIT SULFUR SLURRY	1	Vertical		8
P-1509	Lo-Cat® SOUTH PIT SULFUR SLURRY PUMP	1	Vertical		8
P-1510/1511	Lo-Cat® SOLUTION VACUUM PUMPS	2	Vertical	5	10
P-1513	Lo-Cat® SUMP PUMPS	1			
BL-1803/1804	Lo-Cat® FLASH DRUM VAPOR VACUUM	2			
P-1803A	Lo-Cat® VACUUM PUMP SEAL WATER	1			
P-1902	Lo-Cat® OXIDIZER PUMP	1			
P-1905A	Lo-Cat® CAUSTIC INJECTION PUMP	1			
P-1906A	Lo-Cat® IRON CHELATE & IRON CHELATE W/ SURFACTANT ADDITIVE PUMP	1			
P-1907A	Lo-Cat® IRON CHELATE W/ SURFACTANT BOOSTER PUMP	1			
P-1909	Lo-Cat® DIESEL INJECTION PUMP	1			
P-204 A/B	BRINE WATER PUMPS (GLYCOL/WATER)	2	Skid		2.5 x 1

Venoco EOF Equipment List from 07/18/2005 (assumed to be current)

Tag Number	Description	Quantity	Orientation	Dimensions (feet)	
				Diameter	Length/Height
P-205 A/B	FRESH WATER SUPPLY PUMPS	2			3 x 18
P-206 A	PRIMARY FIRE WATER PUMP (ELECTRIC)	1	Rectangula		6 x 3
P-206 B	SECONDARY FIRE WATER PUMP (DIESEL)	1	Rectangula		8 x 4
P-207 A/B/C	RICH / LEAN GLYCOL PUMPS	3			
P-208	GLYCOL STORAGE TRANSFER PUMP	1	Skid		2 x 1.5
P-209 A/B	THERMINOL FLUID PUMPS	2	Skid		4.5 x 1.5
P-212 A/B	LPG LOADING PUMPS	2	Skid		3 x 1
P-214	STORM WATER CELLAR SUMP PUMP	1			
P-215	PROCESS HYDROCARBON SUMP PUMP	1			
P-236	LUBE OIL PUMP	1			
P-219	COMPRESSOR WATER COOLER PUMP	1			
P-225	LUBE OIL RECIRCULATING PUMP	1			
P-231	LUBE OIL RECIRCULATING PUMP	1			
P-230	STORM WATER SUMP PUMP	1			
P-237	WATER IRRIGATION PUMP	1			
P-244	CRUDE OIL SUMP PUMP	1			
P-245 A/B	NGL LACT PUMPS (IDLE)	2			
P-248 A/B	YORK JACKET WATER PUMP	2			
P-249 A/B	COOLING WATER CIRCULATION PUMPS	2			
P-250 A/B	CONDENSATE RECOVERY PUMPS	2			
P-257	PRE-LUBE PUMP W/COMPRESSOR	1			
F-211	GRACE UNIT INLET POLISHING FILTER	1	Vertical	0.8	5.25
F-210	GRACE UNIT INLET GUARD BED	1	Vertical	2.5	9.7
S-201	STORM WATER CELLAR SUMP PUMP	1	Horizontal	6.5	14
S-202	PROCESS HYDROCARBON SUMP	1	Horizontal	6.5	14
S-203	CRUDE OIL SUMP	1	Vertical	8	8
S-207	Lo-Cat® SUMP	1	Horizontal	5	10
S-205	Lo-Cat® INLET SOUR GAS LIQUID SUMP	1	Horizontal	2	11.9
S-230	WATER RUNOFF SUMP	1	Horizontal	5	10
T-101	VISCOSITY REDUCER TANK	1	Vertical	12	20
T-101 A/B/C/D	CHEMICAL STORAGE TANKS	4	Vertical		
T-102A/B/C	CHEMICAL STORAGE TANKS	3			
T-103/104	CHEMICAL STORAGE TANKS	2			
S-206	FLUOR SOLVENT SUMP (IDLE)	1	Vertical	4	5
T-1901	Lo-Cat® SOLUTION REACTION TANK (IDLE)	1	Vertical	29.75	22.3
T-1902/1903	Lo-Cat® SOLUTION OXIDIZERS	2	Vertical	29.75	21
T-1904	Lo-Cat® MAKE-UP TANK	1	Vertical	6	4
T-1905	Lo-Cat® CAUSTIC STORAGE TANK	1	Vertical	8	15
T-207	OXYGEN SCAVENGER CHEMICAL STORAGE TANK (IDLE)	1	Vertical	3.5	10
T-218	LUBE OIL STORAGE TANK (40 wt)	1	Vertical	8	10
T-3101	Lo-Cat® BALANCE TANK (PIT)	1	Pit		33 x 30 x -10
T-3102	Lo-Cat® NORTH SLURRY TANK (PIT)	1	Pit		20 x 32 x -10
T-3103	Lo-Cat® SOUTH SLURRY TANK (PIT)	1	Pit		20 x 32 x -10
TK-100	LUBE OIL STORAGE TANK (30 wt)	1	Vertical	6.3	14
TK-205/206	FIRE WATER STORAGE TANKS (3,000 BBL)	2	Vertical	30	24
TK-219	DIESEL STORAGE TANK	1	Vertical	8	10
V-118	INLET SEPARATOR	1	Vertical	2.5	10
V-119	OUTLET SEPARATOR	1	Vertical	2.5	10
V-1201	Lo-Cat® 1st STAGE SEPARATOR DRUM	1	Vertical	8	10
V-1202	Lo-Cat® 2nd STAGE SEPARATOR DRUM	1	Vertical	8	10
V-1203	Lo-Cat® GAS SEPARATOR (WATER WASH DRUM)	1	Vertical	8	10.75

Venoco EOF Equipment List from 07/18/2005 (assumed to be current)

Tag Number	Description	Quantity	Orientation	Dimensions (feet)	
				Diameter	Length/Height
V-1206	Lo-Cat® SOLUTION FLASH DRUM	1	Vertical	8	14
V-1207	Lo-Cat® SOLUTION KNOWK OUT DRUMS	1	Vertical	4	8
V-1210	Lo-Cat® Water storage tank	1	Vertical	3	10
V-1803/1804	SEAL WATER SEPARATORS	2	Vertical	7	1.8
V-203	INLET GAS SEPARATOR	1	Vertical	6	8
V-204	INLET GAS SEPARATOR	1	Vertical	2	8
V-205	DELEVAL 1st STAGE SUCTION SCRUBBER	1	Vertical	4.5	10
V-206	DELEVAL 2nd STAGE SUCTION SCRUBBER	1	Vertical	4	14.2
V-207	DELEVAL 2nd STAGE SUCTION SCRUBBER	1	Vertical	3	11.6
V-208	DELEVAL 3rd STAGE SUCTION SCRUBBER	1	Vertical	3	11.6
V-209	GLYCOL SEPARATOR	1	Horizontal	4.5	22
V-210	GLYCOL REBOILER / SURGE TANK	1	Horizontal	4	13.5
V-211	GLYCOL FLASH TANK	1	Vertical	1.7	6
V-212	GLYCOL STORAGE TANK	1	Horizontal	4	22
V-213	THERMINOL FLUID SURGE TANK	1	Horizontal	6	16
V-214	STABILIZER	1	Vertical	4	23
V-215	DEBUTANIZER BOTTOM HALF	1	Vertical	3.5	22
V-216	DEBUTANIZER UPPER HALF	1	Vertical	3.5	22
V-217	DEBUTANIZER REFLUX ACCUMULATOR	1	Horizontal	4	10
V-218	LIQUID PETROLEUM GAS (LPG) STORAGE TANK	1	Horizontal	12.1	54.7
V-219	LIQUID PETROLEUM GAS (LPG) STORAGE TANK	1	Horizontal	12.1	54.7
V-220	LPG LOADING RACK VENT TANK	1	Vertical	2	10
F-225	WATER FILTER	1	Vertical		
F-2201/2202	Lo-Cat® INLET GAS FILTER SEPARATORS	2	Horizontal	4	14
F-2203	Lo-Cat® OUTLET GAS FILTER SEPARATOR	1	Horizontal	4	14
V-221	VAPOR RELIEF & FUEL SYSTEM	1	Horizontal	5	15
V-224	HYBON SCRUBBER	1	Vertical	1.7	8
V-225	FIRE WATER FOAM STORAGE TANK	1	Horizontal	5	8.5
V-227	NATURAL GAS LIQUIDS (NGL) STORAGE	1	Horizontal	12.1	54.7
V-228	NATURAL GAS LIQUIDS (NGL) STORAGE	1	Horizontal	12.1	54.7
V-229	1st STAGE SUCTION SCRUBBER	1	Vertical	3	9.5
V-230	2nd STAGE SUCTION SCRUBBER	1	Vertical	3	8
V-232	3rd STAGE SUCTION SCRUBBER	1	Vertical	2	12.75
V-230A	2ND STAGE AUXILIARY SCRUBBER	1	Vertical	2.5	10
V-231	2ND STAGE DISCHARGE SCRUBBER	1	Vertical	2	12.75
V-234	VRU #1 LIQUID RECEIVER	1	Horizontal	1	2.75
V-237A	FREEWATER KNOCKOUT	1	Vertical		
V-114 115 116	SWEETENING TOWERS (IRON SPONGE)	3	Vertical	6	16
V-242	SURGE TANK	1	Horizontal	3	7.5
F-209	WATER FILTER	1	Vertical		
E-220	AERIAL COOLER	1	Skid	2	22
K-1 / K-3	VRU #1 / #3 1st STAGE COMPRESSOR	2	Rectangula		8
K-2 / K-4	VRU #2 / #4 2nd STAGE COMPRESSOR	2	Rectangula		14
	LPG LOADING RACK	1	Skid		12 x 8
	IRON SPONGE SUMP PIT	1	Pit		30 x 5 x -4
6"-G-453-HC-B	6-inch GAS PIPELINE FROM PLATFORM			0.5	
	6-inch PIPELINE SCRAPER PIG RECEIVER	1	Horizontal	1	6
T-1907	Lo-Cat® 350 STORAGE TANK	1	Vertical	8	20
T-1905	Lo-Cat® CAUSTIC TANK	1	Vertical	8	15
T-1906	Lo-Cat® ARI-310H STORAGE DRUM	1	Vertical	8	20
P-218	COMPRESSOR OIL SUPPLY TANK PUMP	1			

Venoco EOF Equipment List from 07/18/2005 (assumed to be current)

Tag Number	Description	Quantity	Orientation	Dimensions (feet)	
				Diameter	Length/Height
P-243	FIRE WATER SYSTEM PRESSURE MAINT. PUMP	1			
	UNDERGROUND GASOLINE TANK (9950	1	Horizontal	8	28
	GRACE UNIT 4-TUBE MEMBRANE	4	Horizontal	0.9	23
V-238	H-207 INLET SCRUBBER	1	Vertical	3	4
T-1908	SULFUR TOWER	1	Vertical	12	26
T-1909	Lo-Cat® DIESEL INJECT TANK	1	Vertical	2	3
	VAPOR RECOVERY CARBON CANISTERS	2			
V-235	VRU #1 SUCTION SCRUBBER	1	Vertical	2	4
V-236	VRU #2 SUCTION SCRUBBER	1	Vertical	3	6
	VACUUM TRUCK EXHAUST CAUSTIC TANK	1	Portable		
V-240	JACKET WATER SURGE TANK	1	Vertical	1	15
V-240A	JACKET WATER CHEMICAL INHIBITOR	1	Vertical	1.5	4
F-205A/B	INSTRUMENT AIR DRYER TOWERS	2	Vertical		
V-237	INSTRUMENT AIR RECEIVER	1	Horizontal	2.5	4.2
F-237A/B/C/D	AIR FILTERS	5	Vertical		
V-244A	YORK S.D. LIQUID OFF RECEIVER	1	Horizontal	0.8	6
V-244	YORK OIL RECOVERY SCRUBBER	1	Horizontal	1.5	4
V-241	PROPANE STORAGE TANK	1	Horizontal	5	20
V-210A	GLYCOL DRIP TANK	1	Horizontal		
E-224	GLYCOL/GLYCOL EXCHANGERS	2	Horizontal		
BL-730	AIR BLOWER FOR HEATER H-204	1		1	1.3
FQI-222	NGL & LPG LACT	1			
FQI-223	LPG LACT	1			
P-226/P-229	JACKET WATER SURGE TANK PUMP	2			

APPENDIX G – RESERVE APPRAISAL REPORTS

DeGolyer and MacNaughton
5001 Spring Valley Road
Suite 800 East
Dallas, Texas 75244

APPRAISAL REPORT
as of
DECEMBER 31, 2011
on
CERTAIN PROPERTIES
owned by
VENOCO, INC.

PROJECTION OF ESTIMATED PROVED PRODUCTION AND REVENUE
AS OF DECEMBER 31, 2011
FROM CERTAIN PROPERTIES OWNED BY
VENOCO, INC.

Field: SOUTH ELLWOOD
Reserve Class: PROVED

Year Ending Dec 31	Completions	Gross Oil and Cond Production (bbl)	Gross Wet Gas Production (Mcf)	Gross Sales Gas Production (Mcf)	Net Oil and Cond Production (bbl)	Net NGL Production (bbl)	Net Sales Gas Production (Mcf)	Net Oil Equiv. Production (BOE)
2012	24	1,114,675	961,813	590,556	929,063	95,617	489,238	1,106,216
2013	27	1,941,914	1,752,594	1,076,091	1,618,258	174,732	894,058	1,942,008
2014	27	2,115,876	1,917,880	1,177,566	1,763,234	191,301	978,612	2,117,664
2015	27	1,952,800	1,760,608	1,081,012	1,627,332	175,606	898,525	1,952,694
2016	27	1,807,397	1,620,880	995,221	1,506,165	161,665	827,187	1,805,695
2017	27	1,664,024	1,484,433	911,443	1,386,686	148,052	757,532	1,660,992
2018	27	1,536,693	1,363,650	837,281	1,280,579	136,001	695,865	1,532,558
2019	27	1,418,578	1,250,644	767,893	1,182,150	124,725	638,177	1,413,241
2020	26	1,313,817	1,151,863	707,245	1,094,847	114,873	587,752	1,307,670
2021	26	1,210,558	1,055,804	648,264	1,009,795	105,295	538,722	1,203,875
2022	26	1,118,800	970,686	595,999	932,337	96,795	495,270	1,111,675
2023	26	1,033,783	892,121	547,765	861,482	88,959	455,171	1,026,303
2024	25	958,031	822,318	504,903	798,358	81,996	419,545	950,275
2025	25	882,631	754,024	462,970	735,526	75,183	384,687	874,827
2026	24	815,716	693,490	425,604	679,766	69,145	353,790	807,871
2027	24	754,537	638,022	391,743	628,782	63,613	325,484	746,643
2028	24	698,708	584,955	359,163	582,252	58,315	298,395	690,307
2029	22	643,979	534,389	328,117	536,655	53,276	272,589	635,355
2030	22	596,053	492,034	302,109	496,705	49,052	250,977	587,594
2031	22	551,784	453,068	278,184	459,821	45,165	231,095	543,498
Subtotal		24,130,554	21,155,256	12,989,329	20,108,793	2,109,356	10,792,871	24,016,961
Remaining		5,750,992	4,185,645	2,569,986	4,792,492	417,560	2,136,521	5,566,146
Total		**29,881,546**	**25,340,901**	**15,559,315**	**24,901,285**	**2,526,916**	**12,929,392**	**29,583,107**
Cumulative		58,462,576	58,059,769	58,059,769				
Ultimate		88,344,122	83,400,670	73,619,084				

[redacted]

[redacted]

Gross Completions

Oil	Gas
25	2

Month of Last Production:12/2055

Interests (Percent)

Data	Working	Revenue

[redacted]

DeGolyer and MacNaughton
F-716
TEXAS REGISTERED ENGINEERING FIRM

These data accompany the report of DeGolyer and MacNaughton and are subject to its specific conditions.

DeGolyer and MacNaughton
5001 Spring Valley Road
Suite 800 East
Dallas, Texas 75244

APPRAISAL REPORT
as of
DECEMBER 31, 2012
on
CERTAIN PROPERTIES
owned by
VENOCO, INC.

PROJECTION OF ESTIMATED PROVED PRODUCTION AND REVENUE
AS OF DECEMBER 31, 2012
FROM CERTAIN PROPERTIES OWNED BY
VENOCO, INC.

Field: SOUTH ELLWOOD
Reserve Class: PROVED

Year Ending Dec 31	Completions	Gross Oil and Cond Production (bbl)	Gross Wet Gas Production (Mcf)	Gross Sales Gas Production (Mcf)	Net Oil and Cond Production (bbl)	Net NGL Production (bbl)	Net Sales Gas Production (Mcf)	Net Oil Equiv. Production (BOE)
2013	25	1,906,118	1,107,163	427,544	1,588,433	66,429	355,169	1,714,055
2014	25	1,999,294	1,224,408	518,413	1,666,077	73,465	430,966	1,811,372
2015	25	1,845,957	1,113,361	473,156	1,538,297	66,803	393,309	1,670,653
2016	25	1,708,414	1,015,638	433,162	1,423,681	60,936	360,040	1,544,622
2017	25	1,572,808	922,239	394,630	1,310,672	55,336	327,990	1,420,669
2018	25	1,452,378	840,526	360,771	1,210,316	50,432	299,820	1,310,719
2019	25	1,341,457	766,642	329,982	1,117,878	45,997	274,216	1,209,582
2020	25	1,242,518	701,582	302,771	1,035,432	42,095	251,587	1,119,458
2021	25	1,144,834	638,966	276,416	954,030	38,339	229,666	1,030,644
2022	25	1,058,062	583,979	253,181	881,716	35,039	210,342	951,813
2023	25	978,071	534,033	231,994	815,061	32,041	192,733	879,222
2024	25	906,701	489,913	213,222	755,585	29,395	177,118	814,502
2025	25	836,133	447,218	194,968	696,775	26,834	161,940	750,602
2026	25	773,421	409,613	178,840	644,516	24,576	148,534	693,848
2027	25	714,936	373,143	163,465	595,784	22,391	135,753	640,793
2028	24	662,824	341,110	149,892	552,348	20,464	124,466	593,564
2029	24	611,811	296,404	132,716	509,845	17,787	110,427	546,030
2030	23	566,461	261,220	118,776	472,052	15,670	98,977	504,224
2031	23	524,591	239,283	108,975	437,160	14,358	90,815	466,653
2032	23	487,209	219,839	100,266	406,004	13,188	83,555	433,120
Subtotal		22,333,997	12,526,280	5,363,140	18,611,662	751,575	4,457,423	20,106,145
Remaining		4,263,394	1,734,496	812,431	3,552,828	104,072	677,025	3,769,736
Total		**26,597,391**	**14,260,776**	**6,175,571**	**22,164,490**	**855,647**	**5,134,448**	**23,875,881**
Cumulative		55,313,191	56,616,081	56,616,081				
Ultimate		81,910,582	70,876,857	62,791,652				

[redacted]

Gross Completions

Oil	Gas
23	2

Month of Last Production: 01/2049

Interests (Percent)

Date	Working	Revenue

[redacted]

DeGolyer and MacNaughton
F-716
TEXAS REGISTERED ENGINEERING FIRM

DeGolyer and MacNaughton
5001 Spring Valley Road
Suite 800 East
Dallas, Texas 75244

APPRAISAL REPORT
as of
DECEMBER 31, 2013
on
CERTAIN PROPERTIES
owned by
VENOCO, INC.

PROJECTION OF ESTIMATED PROVED PRODUCTION AND REVENUE
AS OF DECEMBER 31, 2013
FROM CERTAIN PROPERTIES OWNED BY
VENOCO, INC.

State: CALIFORNIA
Field: SOUTH ELLWOOD
Reserve Class: PROVED

Year Ending Dec 31	Completions	Gross Oil and Cond Production (bbl)	Gross Wet Gas Production (Mcf)	Gross Sales Gas Production (Mcf)	Net Oil and Cond Production (bbl)	Net NGL Production (bbl)	Net Sales Gas Production (Mcf)	Net Oil Equiv. Production (BOE)
2014	30	1,762,913	1,403,866	603,661	1,469,095	97,950	503,052	1,650,890
2015	31	1,673,276	1,545,850	664,715	1,561,060	106,633	553,931	1,760,011
2016	32	1,620,213	1,517,204	652,402	1,516,848	104,287	543,662	1,711,747
2017	32	1,752,913	1,510,309	649,429	1,494,091	103,371	541,198	1,687,661
2018	31	1,636,087	1,378,127	592,596	1,365,078	94,371	493,825	1,541,749
2019	31	1,498,031	1,258,776	541,276	1,248,355	86,239	451,063	1,409,770
2020	31	1,374,562	1,153,837	496,145	1,145,469	79,083	413,459	1,293,464
2021	31	1,255,200	1,052,672	452,652	1,046,001	72,167	377,207	1,181,057
2022	31	1,150,177	963,870	414,462	958,477	66,130	345,388	1,082,173
2023	31	1,054,515	883,229	379,791	878,765	60,630	316,486	992,149
2024	31	969,756	812,063	349,187	808,131	55,779	290,992	912,403
2025	31	887,278	740,820	318,548	739,396	50,918	265,458	834,558
2026	31	814,431	676,676	290,974	678,694	46,555	242,473	765,661
2027	31	747,845	621,736	267,348	623,204	42,802	222,793	703,137
2028	31	686,756	573,189	246,469	573,984	39,482	205,393	647,677
2029	31	630,903	524,497	225,533	525,753	36,158	187,942	593,237
2030	30	559,505	477,818	205,463	466,248	32,984	171,218	527,774
2031	28	500,946	429,571	184,717	417,457	29,718	153,928	472,827
2032	22	458,590	394,144	169,481	382,155	27,295	141,236	432,990
2033	21	419,018	361,313	155,366	349,188	25,037	129,469	395,798
Subtotal		21,896,915	18,279,567	7,860,215	18,247,429	1,257,609	6,550,175	20,596,733
Remaining		3,477,778	3,096,507	1,331,496	2,898,145	215,817	1,109,586	3,298,896
Total		**25,374,693**	**21,376,074**	**9,191,711**	**21,145,574**	**1,473,426**	**7,659,761**	**23,895,629**
Cumulative		53,505,312	56,384,582	56,384,582				
Ultimate		78,880,005	77,760,656	65,576,293				

[redacted]

Gross Completions

Oil	Gas
31	1

Month of Last Production: 12/2049

Interests (Percent)

Date	Working	Revenue

[redacted]

DeGolyer and MacNaughton
F-716
TEXAS REGISTERED ENGINEERING FIRM

DeGolyer and MacNaughton
5001 Spring Valley Road
Suite 800 East
Dallas, Texas 75244

APPRAISAL REPORT
as of
DECEMBER 31, 2014
on
CERTAIN PROPERTIES
owned by
VENOCO, INC.

PROJECTION OF ESTIMATED PROVED PRODUCTION AND REVENUE AS OF DECEMBER 31, 2014 FROM CERTAIN PROPERTIES OWNED BY VENOCO, INC.

State: CALIFORNIA
Field: SOUTH ELLWOOD
Reserve Class: PROVED

Year Ending Dec 31	Completions	Gross Oil and Cond Production (bbl)	Gross Wet Gas Production (Mcf)	Gross Sales Gas Production (Mcf)	Net Oil and Cond Production (bbl)	Net NGL Production (bbl)	Net Sales Gas Production (Mcf)	Net Oil Equiv. Production (BOE)
2015	29	1,351,847	1,204,427	541,994	1,126,541	94,964	451,658	1,296,781
2016	30	1,311,420	1,195,003	537,750	1,092,847	94,170	446,129	1,261,706
2017	31	1,615,511	1,499,347	674,704	1,346,259	116,300	562,252	1,556,267
2018	30	1,513,944	1,408,673	633,005	1,261,625	109,221	527,501	1,458,763
2019	30	1,391,229	1,284,072	577,833	1,151,019	99,648	481,529	1,330,922
2020	30	1,263,987	1,176,135	529,260	1,053,323	91,222	441,052	1,218,051
2021	30	1,150,871	1,072,237	482,508	959,059	83,117	402,090	1,109,195
2022	30	1,051,318	981,068	441,478	876,102	76,020	367,899	1,013,435
2023	30	960,776	898,344	404,256	800,645	69,575	336,879	926,373
2024	30	883,846	825,387	371,425	736,539	63,905	309,521	852,025
2025	30	809,276	754,796	339,657	674,398	58,416	283,050	779,992
2026	30	742,425	692,731	311,728	618,684	53,597	259,772	715,577
2027	30	681,347	636,176	286,281	567,790	49,206	238,565	656,756
2028	30	627,175	585,288	263,831	522,646	45,341	219,858	604,628
2029	30	574,372	537,772	241,997	478,646	41,578	201,665	553,833
2030	30	527,704	495,049	222,773	439,751	37,468	185,644	508,161
2031	29	479,175	443,297	199,482	399,311	33,842	166,236	460,858
2032	24	425,196	401,416	180,635	354,328	31,136	150,533	410,554
2033	23	387,853	368,793	165,959	323,214	28,608	138,297	374,869
2034	23	356,233	340,356	153,159	296,859	26,406	127,633	344,540
Subtotal		18,095,505	16,799,367	7,559,715	15,079,586	1,303,740	6,299,763	17,433,286
Remaining		2,791,537	2,780,790	1,251,357	2,326,282	215,754	1,042,796	2,715,835
Total		**20,887,042**	**19,580,157**	**8,811,072**	**17,405,868**	**1,519,494**	**7,342,559**	**20,149,121**
Cumulative		54,554,040	57,037,188	57,037,188				
Ultimate		75,441,082	76,617,345	65,848,260				

[redacted]

Gross Completions

Oil	Gas
30	1

Month of Last Production: 10/2049

Interests (Percent)

Date	Working	Revenue

DeGolyer and MacNaughton
F-716
TEXAS REGISTERED ENGINEERING FIRM